DOCKETED

Docket Number:	09-AFC-05C
Project Title:	Abengoa Mojave Compliance
TN #:	202462
Document Title:	May 2014 Monthly Compliance Report, Part 1
Description:	N/A
Filer:	Dale Rundquist
Organization:	California Energy Commission / Abengoa Solar
Submitter Role:	Commission Staff
Submission Date:	6/16/2014 3:39:38 PM
Docketed Date:	6/16/2014

ABENGOA SOLAR
Mojave Solar LLC
13911 Park Avenue, Suite 206 Phone: 760.962.9200
Victorville, CA 92392 Fax: 760.962.9292

SUBMITTED ELECTRONICALLY

Subject:	**09-AFC-5C**
Description:	**Monthly Compliance Report**
Date:	**June 13, 2014**
Distribution:	**Dale Rundquist, CEC; Carol Hammel-Smith, US DOE; Wendy Campbell, DFW; Ray Bransfield, FWS**

Dale Rundquist, CPM
California Energy Commission
1516 Ninth Street
Sacramento, California 95814

Dear Mr. Rundquist,

The attached Monthly Compliance Report for May 2014 is submitted for your review as part of ongoing reporting required by the California Energy Commission's Conditions of Certification for the Mojave Solar Project. This monthly report has been added to the archival site on Box.com.

Please direct any question to me.

Sincerely,
William "Bill" Grisolia
Compliance Management
41234 Harper Lake Road
Hinkley, California 92347
(303) 885-2036 Cell

Attachment: Monthly Compliance Report

Mojave Solar Project
Monthly Compliance Report



May 2014 Reporting Period

Prepared for:

Mojave Solar LLC
13911 Park Avenue, Suite 206
Victorville, California 92392

Introduction

During construction of the Mojave Solar Project, monthly compliance reports are provided to the California Energy Commission (CEC) as required by Condition of Certification COMPLIANCE-6 of the License Decision, docket number 09-AFC-5C. This is the Monthly Compliance Report (MCR) for May 2014.

Construction activities in May included work on steam turbine generators (STG) and condensers, STG piping, balance of plant (BOP) piping, miscellaneous foundations in the Power Blocks (PB) and cooling tower piping. Heat Transfer Fluid filling activity took place in the both Alpha and Beta main headers.

Construction installation included cable trays, heat tracing cable, air compressor system, CO2 tank, PB auxiliary structure and construction, turbine lube oil system and turbine auxiliary piping, instrumentation and controls, pipe welding for ullage/overflow systems and expansion vessels, piping in the racks, solar field instrumentation, Water Treatment Plant (WTP) filters, motor control room in WTP, WTP rack, filter equipment, pipe utilities installation and welding, electrical equipment panels, fire protection systems, solar field and PB grounding, and steam generator, PB piping and BOP equipment insulation.

The following table provides a summary of all areas covered in this report.

Mojave Solar Project Monthly Compliance Reporting	
Condition of Certification (COC) Topics	Appendix
Air Quality	See Appendix A
Biological Resources	See Appendix B
Cultural Resources	See Appendix C
Paleontological Resources	See Appendix D
Waste Management	See Appendix F
Worker Safety	See Appendix E
Soil and Water	See Appendix F
General Conditions	See Appendix F
Civil	See Appendix F
Structural	See Appendix F
Mechanical	See Appendix F
Electrical	See Appendix F
Transmission System Engineering	See Appendix F
Compliance Forecast	See Appendix G
Compliance Matrix	See Appendix H

Appendix A
Air Quality Resources

Mojave Solar Project
Monthly Compliance Report
San Bernardino County, California

May 2014 Reporting Period

CH2M HILL
2485 Natomas Park Drive
Suite 600
Sacramento, CA
95833-2937
Tel: 916.920.0300
Fax: 916.920.8463

June 4, 2014

Dale Rundquist, CPM
California Energy Commission
Siting, Transmission & Environment Protection (STEP) Division
1516 Ninth Street (MS-2000)
Sacramento, CA 95814
drundqui@energy.state.ca.us

RE: AQ-SC3, AQ-SC4, AQ-SC5, and WORKER SAFETY-8 Monitoring and Mitigation Activities at Mojave Solar Project (09-AFC-5C) for May 1 through May 31, 2014

Dear Mr. Rundquist:

This letter is to update you on the air quality construction monitoring occurring at the Mojave Solar Project (MSP) site during May 2014. Compliance with the WORKER SAFETY-8 condition was also monitored. Construction activities occurred May 1 through 31, 2014. Compliance monitoring was performed by Jose Manuel Bravo Romero of Abengoa; who is the full-time onsite Air Quality Construction Mitigation Manager (AQCMM). I, Christopher Waller of CH2M HILL, am the designated AQCMM delegate and visited the site on May 30, 2014, to ensure compliance with record keeping and conditional requirements.

Overview

Construction activities in May included heat transfer fluid (HTF) pipe insullation installation, HTF pipe testing, steam turbine generator (STG) assembly, fire protection system installation, water treatment plant (WTP) equipment and utilities installation, balance of plant (BOP) structure installation, Beta raw water line isntallation, heat trace installation, solar field and power block grouting, solar field grounding, and production well development. Construction was monitored for compliance with Conditions of Certification (COCs) AQ-SC3, AQ-SC4, AQ-SC5, and WORKER SAFETY-8. New equipment brought onsite during May was issued a tag in accordance with AQ-SC5a, and evaluated for compliance with AQ-SC5b through AQ-SC5d. A summary of the compliance with the Air Quality Construction Mitigation Plan (AQCMP) is provided in the following sections. Daily, weekly, and monthly observation logs and other site inspection forms are maintained onsite and available upon request.

Compliance Assessment

AQ-SC3 – Fugitive Dust Control

All of the AQ-SC3 COCs were in effect during May 2014. The following section summarizes each COC and describes the level of compliance.

- AQ-SC3a: Soil stabilizers on main access roads and delivery areas

  Soil stabilizers have been applied to finished access roads and delivery areas. Main roads in Beta have been paved.

- AQ-SC3b: Watering of disturbed areas

  Watering of actively disturbed areas was performed for all construction activities with the potential to create airborne dust plumes. When necessary, watering was intensified as directed by the onsite AQCMM and construction managers.

- AQ-SC3c: Speed limits

  The required speed limits have been enforced onsite.

- AQ-SC3d: Speed limit signage

  Speed limit signage has been posted and is clearly visible at all site entrances.

- AQ-SC3e: Tire inspection and washing prior to exiting to paved roadway

  Although tire washing stations have not been installed, all construction vehicles are inspected for dirt and other debris prior to exiting to paved public roadways.

- AQ-SC3f: Tire washing station

  As stated above, no tire washing stations have been installed. However, tires of construction vehicles are inspected for dirt and other debris prior to exiting to paved public roadways.

- AQ-SC3g: Unpaved exit treatment

  Rumble plates are installed at all site exits.

- AQ-SC3h: Construction vehicles use approved entrances only

  When traveling between sites, construction vehicles use approved entrances only.

- AQ-SC3i: Run-off onto public roadways

  Earthmoving activities have resulted in run-off being directed away from paved public roadways. In addition, fiber rolls have been placed where the potential for run-off onto public roadways exist. Watering has not resulted in run-off onto public roadways.

- AQ-SC3j: Sweeping of paved roads within construction site

  Sweeping of paved roads within the site is performed as necessary.

- AQ-SC3k: Sweeping of public paved roadways with access to the MSP site

  Sweeping of Harper Lake Road and Lockhart Road is performed as necessary.

- AQ-SC3l: Stabilization of storage piles

  Significant earthmoving activities performed during May 2014 included trenching for the Beta well #4 raw water line. Areas disturbed during trenching were sufficiently watered during all construction activities. Storage piles generated as a result of trenching activities will be used to backfill the trench after installtion of the water line is complete. Additional storage piles exist to the east of the Alpha evaporation pond. These storage piles are watered frequently, and will be re-distributed at a later date. All other soil piles are temporary excavation spoils or grading excesses that are re-distributed prior to exceeding the 10-day limit for cover or treatment.

- AQ-SC3m: Stabilization of transported solid bulk material

  Transported solid bulk materials are sufficiently watered, and at least one foot of freeboard is provided during transportation.

- AQ-SC3n: Wind control techniques

  Wind fencing has been installed in Alpha East, Alpha West, and Beta along the eastern and western borders of each area.

AQ-SC4 – Dust Plumes & WORKER SAFETY-8 – Site Worker Fugitive Dust Protection

The following construction activities were performed during the May 1 to May 31, 2014 reporting period:

- HTF pipe insulation installation.
- HTF pipe testing
- STG assembly.
- STG insulation installation.
- Turbine and turbine auxiliary piping installation.
- Instrument and controls installation.
- Power block auxiliary structure construction and installation.
- Power block insullation installation.
- Solar field grounding.
- Power block and solar field grouting.
- BOP piping assembly.
- WTP rack, filter equipment, electrical equipment, and pipe utilities installation and welding.
- Motor control center (MCC) room in WTP installation.
- WTP chemical dosing and safety shower system installation.
- Beta raw water line trenching and installation.
- Rack equipment and insulation installation.
- Electrical, administration, and control building installation.
- Miscellaneous foundation construction.
- Cable tray and cable tray insullation installation.
- Heat trace installation.
- Isophase installation.
- Fire protection system installation.
- Production well development.

There were no high wind events (wind gusts of at least 25 mph) during May 2014. Therefore, there were no work stoppages due to inclement weather.

Soil stabilization has been implemented on finished haul roads and delivery areas. In addition, main roads in Beta and Harper Lake Road south of Lockhart Road have been paved. Unfinished areas and haul roads without soil stabilizers are watered daily to mitigate against the formation of fugitive dust. A truck washing station has not been installed. However, rumble plates are installed at all site entrances/exits, and the tires of construction vehicles are inspected for dirt and other debris and swept clean as needed prior to exiting the site onto paved roadways.

AQ-SC5 – Diesel-Fueled Engine Control

Attachment 1 to this letter contains a list of equipment operated onsite during May 2014. The list contains equipment information including manufacturer, model, California Air Resources Board (CARB) Equipment Identification Number (EIN), engine model year, engine horsepower, and U.S. Environmental Protection Agency (USEPA) certified tier level.

The following list summarizes each COC for AQ-SC5 and describes the level of compliance.

- AQ-SC5a: Equipment Tags

  A visible air quality tag with a unique number (AQ #) was issued and adhered to all equipment that arrived onsite between May 1 and May 31, 2014.

- AQ-SC5b: USEPA Engine Tier Requirement

  All construction equipment that arrived onsite between May 1 and May 31, 2014, had Tier 3 engines.

- AQ-SC5c: Retrofit Control Termination

  No equipment with retrofit control technology was brought onsite.

- AQ-SC5d: Maintenance Records

  Maintenance records for all vehicles are available upon request.

- AQ-SC5e: "All diesel heavy construction equipment shall not idle for more than five minutes."

  Idle time was monitored by the activity managers and AQCMM. This condition was met during this reporting period.

- AQ-SC5f: Electric motors

  The use of construction equipment with electric motors was not feasible for current construction activities.

Please feel free to call (714) 435-6268 for questions, clarifications, or additional information.

Sincerely,

CH2M HILL



Christopher Waller
Staff Environmental Engineer
AQCMM Delegate
christopher.waller@ch2m.com

c: Jose Manuel Bravo Romero / Abengoa, AQCMM
Christopher Waller / CH2M HILL, AQCMM Delegate

Attachment 1
Construction Equipment Mojave Solar Project

Construction Equipment for Mojave Solar Project – May 2014 Equipment Inver								
Manufacturer	**Model**	**EIN**	**Engine Year**	**Horse Power**	**Engine Tier**	**Vehicle Type**	**Date Arrived**	**Date Si**
CATERPILLAR	950G	GH6Y78	2005	183	2	Rubber-Tired Loader	2011	
DEERE	200D	KF4B33	2011	159	3	Excavator	2011	
CATERPILLAR	CS683E	TX8P94	2005	173	2	Roller	2011	
CATERPILLAR	834B	VF5F83	2010	440	3	Rubber-Tired Dozer	2011	
CATERPILLAR	325DL	JB4V37	2006	168	2	Excavator	1/3/2012	
DEERE	410J	BB3T68	2011	97	4	Tractor/Loader/Backhoe	1/5/2012	
SKYTRAK	8042	HY9R57	2008	110	3	Forklift	1/23/2012	
CATERPILLAR	651B	JA9X63	2006	540	3	Scraper	3/9/2012	
CATERPILLAR	651B	TR7R75	2006	540	3	Scraper	3/9/2012	
CASE	580_SM	BJ8N36	2007	95	2	Tractor/Loader/Backhoe	4/23/2012	
DEERE	310J	DA4B63	2007	75.1	2	Tractor/Loader/Backhoe	4/23/2012	
CATERPILLAR	631C	JW5C94	2010	452	3	Scraper	4/23/2012	
CATERPILLAR	140H	HM5E53	2005	165	2	Grader	6/19/2012	
DEERE	328	AA9M73	2007	82	2	Skid Steer Loader	8/10/2012	
SKYTRAK	8042	KP9P46	2007	110	3	Forklift	8/17/2012	
P&H	453-130	BY3X34	2008	139	3	Crane	9/5/2012	
CATERPILLAR	414E	WJ4X56	2006	92	2	Tractor/Loader/Backhoe	9/5/2012	
A&L	210LJ	HK4M87	2011	84	4	Tractor/Loader/Backhoe	10/5/2012	
DEERE	310J	SS4K74	2011	84	4	Tractor/Loader/Backhoe	10/5/2012	
TEREX	RT230-1	TB3E79	2006	130	2	Crane	10/5/2012	
GROVE	RT518	XE8V88	2008	142	3	Crane	10/5/2012	

Construction Equipment for Mojave Solar Project – May 2014 Equipment Inver								
Manufacturer	**Model**	**EIN**	**Engine Year**	**Horse Power**	**Engine Tier**	**Vehicle Type**	**Date Arrived**	**Date Si**
TEREX	RT 780	KT4X64	2005	275	2	Crane	10/05/12	
TEREX	RT665	NB5R93	2007	215	3	Crane	10/25/2012	
DEERE	310SJ	SP4F87	2011	100	4	Tractor/Loader/Backhoe	10/25/2012	
CATERPILLAR	450E	UB3H55	2008	136	3	Tractor/Loader/Backhoe	10/25/2012	
DIECI	45.17 Icarus	EP4W64	2013	195	4	Rough Terrain Forklift	11/1/2012	
DEERE	210LJ	JW3M53	2011	74	4	Tractor/Loader/Backhoe	11/14/2012	
JLG	G10-55A	WR3G83	2011	130	3	Forklift	11/14/2012	
SKY TRACK	10054	HB6Y56	2012	100	4	Rough Terrain Forklift	11/19/2012	
TEREX	RT780	HR3X86	2006	275	3	Crane	11/19/2012	
GROVE	RT650E	YH5P85	2007	165	3	Crane	11/19/2012	
GENIE	GTH-1056	BJ6A33	2012	139	4	Forklift	11/30/2012	
DEERE	410J	LX6M39	2011	99	4	Tractor/Loader/Backhoe	11/30/2012	
HYSTER	H120FT	NM9Y89	2011	74	4	Forklift	11/30/2012	
JLG	G9-43A	PW7E85	2011	99	4	Forklift	11/30/2012	
GENIE	1056	WG4N88	2010	139	3	Forklift	11/30/2012	
GRADALL	534D9	LG6P89	2011	99	3	Forklift	12/10/2012	
SKY TRAK	10054	YW7Y65	2008	110	3	Forklift	12/10/2012	
CATERPILLAR	315D	BX7C54	2011	115	3	Excavator	12/19/2012	
CATERPILLAR	430E	CT9E46	2011	110	3	Backhoe	12/19/2012	
CATERPILLAR	966H	CU4A75	2008	261	3	Loader	12/19/2012	
JLG	10054	AW6L59	2011	110	3	Forklift	12/27/2012	

Construction Equipment for Mojave Solar Project – May 2014 Equipment Inver								
Manufacturer	**Model**	**EIN**	**Engine Year**	**Horse Power**	**Engine Tier**	**Vehicle Type**	**Date Arrived**	**Date Si**
NEW HOLLAND	B95	DS7V79	2007	95	3	Backhoe	12/27/2012	
TEREX	GTH1056	PP3H77	2011	116	3	Forklift	12/27/2012	
SKYJACK	8042	CE4F84	2008	110	3	Forklift	1/3/2013	
CATERPILLAR	321D	CK7S75	2011	147	3	Excavator	1/3/2013	
TEREX	RT 780	VA3N64	2005	275	3	Crane	1/3/2013	
CATERPILLAR	140M2	XA6E55	2012	264	3	Graders	1/3/2013	
SKYTRAK	8042	HE9X93	2008	110	3	Forklift	1/7/2013	
CATERPILLAR	420F	AE5W73	2012	99.9	3	Backhoe	1/9/2013	
HAMM	3307	GC6S79	2012	74	3	Roller	1/11/2013	
BOMAG	BW177DH	TJ4G76	2010	110	3	Roller	1/11/2013	
CATERPILLAR	420F	AX9E77	2012	99.9	3	Backhoe	1/15/2013	
BOBCAT	S160	KY3G93	2003	56	3	Skid steer	1/15/2013	
KOBELCO	SK70SR	TK3Y36	2005	55	3	Excavator	1/15/2013	
SKYTRAK	10054	WS4M75	2012	100	3	Forklift	1/16/2013	
INGERSOLL - RAND	SD40	WM7E75	2000	80	3	Roller	1/18/2013	
VOLVO	SD100D	AH4W67	2008	130	3	Roller	1/23/2013	
DEERE	210LJ	UC9P95	2011	99.9	3	Backhoe	1/23/2013	
KOMATSU	WA380-6	US8T79	2006	191	3	Loader	1/23/2013	
DEERE	710J	XF3R63	2008	123	3	Backhoe	1/23/2013	
KOMATSU	Fd100t-8	KP8W75	2009	173	3	Forklift	1/23/2013	

Construction Equipment for Mojave Solar Project – May 2014 Equipment Inver								
Manufacturer	**Model**	**EIN**	**Engine Year**	**Horse Power**	**Engine Tier**	**Vehicle Type**	**Date Arrived**	**Date Si**
HYUNDAI	160D-7E	NG7L33	2011	160	3	Forklift	2/2/2013	
DEERE	410J	TF9M89	2007	98	3	Backhoe	2/2/2013	
SKY_TRAK	6036	WK4S78	2006	75	3	Forklift	2/2/2013	
CASE	850L_LGP	MB4W34	2011	99	3	Dozer	2/2/2013	
JLG	G10-55A	LK4C88	2010	101	3	Forklift	2/2/2013	
CATERPILLAR	430F	TP8K57	2012	115.2	3	Backhoe	2/2/2013	
DEERE	210LE	YW3W53	2006	78	3	Backhoe	2/5/2013	
DEERE	135D	YF8D78	2008	97	3	Excavator	2/5/2013	
SKYJACK	VR-843D	UK9H48	2008	110	3	Forklift	2/5/2013	
TEREX	PT100	TT7L43	2010	99.9	3	Loader	2/8/2013	
DEERE	310J	MU8F49	2011	93	3	Backhoe	2/8/2013	
CATERPILLAR	420F	PJ4S33	2012	99.9	3	Backhoe	2/8/2013	
CATERPILLAR	420F	SH5P56	2012	99.9	3	Backhoe	2/11/2013	
OTHER	TJ-5000	MR6P63	2011	220	3	Trucks	2/11/2013	
JLG	G10-55A	KS9K64	2012	250	3	Forklift	2/11/2013	
JLG	G10-55A	Ty9H64	2012	150	3	Aerial Lift	2/11/2013	
HYSTER	H120FT	NM9Y89	2011	74	3	Forklift	2/11/2013	
JLG	660SJ	PC5J79	2012	49	3	Aerial Lift	2/11/2013	
CATERPILLAR	TL943	VT9L56	2011	99	3	Forklift	2/11/2013	
GENIE	Z45/25J	DK3J49	2012	49	3	Aerial Lift	2/19/2013	
TEREX	RT780	VT7C39	2008	275	3	Cranes	2/19/2013	

Construction Equipment for Mojave Solar Project – May 2014 Equipment Inver								
Manufacturer	**Model**	**EIN**	**Engine Year**	**Horse Power**	**Engine Tier**	**Vehicle Type**	**Date Arrived**	**Date Si**
JLG	400S	UV6D76	2006	49	3	Aerial Lift	2/19/2013	
CATERPILLAR	226B3	NS7R98	2011	61	3	Skid-steer-loaders	2/19/2013	
DEERE	135D	YF8D78	2008	97	3	Excavator	2/19/2013	
JLG	G6-42A	TJ4R94	2011	99	3	Forklift	2/19/2013	
GENIE	GTH-5519	JD8F98	2011	67	3	Forklift	3/16/2013	
JLG	10054	CW3C83	2012	85	3	Forklift	3/16/2013	
SKY-TRAK	10054	VA9U73	2008	110	3	Forklift	3/16/2013	
OTHER	XRM1254	EP7D46	2006	122	2	Aerial Lift	3/16/2013	
TEREX	RT780	LP9U53	2007	275	3	Cranes	3/16/2013	
HITACHI	ZX300LC	PF9G47	2005	200	2	Excavator	3/16/2013	
VOLVO	BL60	BK6U58	2012	83	3	Backhoes	3/18/2013	
JLG	G10-55A	NJ3A43	2013	130	3	Forklift	3/18/2013	
HYSTER	H360HD2	BF6N74	2012	155	3	Forklift	3/18/2013	
GRADALL	544D	MN3Y45	2005	200	2	Forklift	3/19/2013	
CASE	580SM/2	SH8S69	2007	95	2	Backhoes	3/22/2013	
CARELIFT	ZB20044-44	KV9A38	2011	160	3	Forklift	3/25/2013	
VOLVO	ECR88	RL9G83	2012	57	3	Excavator	3/28/2013	
JLG	G10-55A-CAB	WU9J47	2011	130	3	Forklift	3/28/2013	
CASE	580-SN	RT9H99	2011	97	3	Backhoes	3/29/2013	
JLG	G10-55A	WW6W44	2011	130	3	Forklift	3/29/2013	

Construction Equipment for Mojave Solar Project – May 2014 Equipment Inver								
Manufacturer	**Model**	**EIN**	**Engine Year**	**Horse Power**	**Engine Tier**	**Vehicle Type**	**Date Arrived**	**Date Si**
CATERPILLAR	TL1255	SU4H58	2011	138	3	Forklift	3/29/2013	
HYSTER	H210	KH9A63	2004	195	2	Forklift	3/29/2013	
JLG	G6-42A	JT4R94	2011	99	3	Forklift	3/16/2013	
JLG	G10-55A	UB3R85	2007	140	3	Forklift	3/26/2013	
GENIE	TH1056C	HX5Y45	2005	125	2	Forklift	3/29/2013	
VOLVO	ERC145DL	RB7E53	2012	114	3	Excavator	4/2/2013	
INGERSOLL-RAND	SD45D/F	ES5C78	2006	80	2	Roller	4/2/2013	
VOLVO	SD43D/F	TY8A44	2007	80	2	Paver	4/2/2013	
CATERPILLAR	D8T	WJ8T88	2006	310	3	Tractors/Loaders/Backhoes	4/2/2013	
SKY-TRAK	10054	KB9Y73	2012	110	3	Forklift	4/2/2013	
DEERE	200D	AB7M73	2011	159	3	Excavator	4/2/2013	
LIEBHERR	LTM_1220-5.1	AD6Y38	2008	496	3	Crane	4/3/2013	
CATERPILLAR	345DL	EC8J65	2008	410	3	Excavator	4/3/2013	
VOLVO	L90G	UM9N34	2012	161	3	Tractors/Loaders/Backhoes	4/3/2013	
VOLVO	L90G	KR7W43	2012	161	3	Tractors/Loaders/Backhoes	4/3/2013	
VOLVO	SD-100D	VU9S58	2008	130	3	Roller	4/4/2013	
DEERE	JD450JLT	KM3W94	2010	77	3	Other	4/4/2013	
GRADALL	G6-42P	VH3R63	2005	99	2	Other	4/4/2013	

Construction Equipment for Mojave Solar Project – May 2014 Equipment Inver								
Manufacturer	**Model**	**EIN**	**Engine Year**	**Horse Power**	**Engine Tier**	**Vehicle Type**	**Date Arrived**	**Date Si**
GRADALL	G6-42A	AR6S85	2006	99.9	2	Forklift	4/4/2013	
KOMATSU	PC400LC-7EO	TA7R86	2006	353	3	Backhoe	4/4/2013	
INGERSOLL-RAND	SD116DX	HT4J67	2007	160	3	Roller	4/4/2013	
OTHER	TJ-5000	VG9N57	2012	220	3	Truck	4/5/2013	
TEREX	RT-780	TH9R77	2005	275	2	Other	4/9/2013	
MANITOWOC	16000	WC8X98	2010	500	3	Crane	4/11/2013	
TEREX	RT-230	SP8M78	2012	130	3	Crane	4/11/2013	
CATERPILLAR	328D	ME3U69	2010	204	3	Excavator	4/12/2013	
SANY-HEAVY-IND	SRC840_RT	VE4C37	2012	408	3	Crane	4/12/2013	
GENIE	Z45/25J-DSL-4WD	NK9E56	2006	48	2	Aerial Lift	4/17/2013	
GENIE	GTH-1056	BG9E85	2012	139	3	Forklift	4/17/2013	
JLG	10054	JR6U95	2008	110	3	Forklift	4/17/2013	
DEERE	318D	LW3B46	2011	76.1	3	Tractors/Loaders/Backhoes	4/17/2013	
SKY-TRAK	SJ46AJ	MY4T53	2012	49	3	Aerial Lift	4/17/2013	
SKY_TRAK	10K_RCHLFT	KV5C43	2007	110	3	Forklifts	5/1/2013	
VOLVO	ECR305CL	VT9L86	2010	205	3	Excavator	5/2/2013	
DEERE	210LJ	UC3K76	2008	99	3	Backhoes	5/2/2013	
TEREX	RT345	JS3S84	2011	160	3	Cranes	5/6/2013	

Construction Equipment for Mojave Solar Project – May 2014 Equipment Inver								
Manufacturer	**Model**	**EIN**	**Engine Year**	**Horse Power**	**Engine Tier**	**Vehicle Type**	**Date Arrived**	**Date Si**
MASSEY-FERGUSON	6255	GA8S84	2003	93	1	Tractor	5/8/2013	5/16/
GRADALL	544D	EU9X67	2000	130	1	Forklifts	5/9/2013	5/10/
BOBCAT	T190	WS8X94	2010	66	3	Loaders	5/13/2013	
CATERPILLAR	966H	WM3B35	2007	261	3	Loaders	5/17/2013	
SKY_TRAK	10K_RCHLFT	RA7A36	2007	110	3	Forklifts	5/20/2013	
CATERPILLAR	297C	BT6X94	2007	94	2	Loaders	5/30/2013	6/5/
CATERPILLAR	TH460B	EH3K78	2005	100	1	Lifts	6/4/2013	6/6/
SKY_TRAK	10054	CS5E84	2012	100	3	Forklifts	6/5/2013	
JCB	527-55	TJ8X64	2012	75	3	Forklifts	6/5/2013	
LJG	G10-55A	BJ5B48	2012	130	3	Forklifts	6/6/2013	
GEHL	DL11L-55	US9P64	2008	115	3	Forklifts	6/6/2013	
JLG	800S	CY3K64	2007	65	2	Lifts	6/7/2013	6/17/
DEERE	326D	CX5A73	2011	75	3	Loaders	6/7/2013	
LINK-BELT	RTC 8075	FN9D69	2009	225	3	Cranes	6/7/2013	
JLG	120AJP_125ART	JE6P64	2011	74	3	Lifts	6/7/2013	
SNORKEL	T65RTCU	EG4G76	2008	65	3	Lifts	6/7/2013	
GENIE	Z-80/60J-W/GEN	AX5A64	2010	73	3	Lifts	6/10/2013	
JLG	800AJ	CY4A37	2011	50	3	Lifts	6/10/2013	
DEERE	310SJ	MC7U99	2010	93	3	Backhoes	6/14/2013	

Construction Equipment for Mojave Solar Project – May 2014 Equipment Inver								
Manufacturer	**Model**	**EIN**	**Engine Year**	**Horse Power**	**Engine Tier**	**Vehicle Type**	**Date Arrived**	**Date Si**
DEERE	544K	SR5B39	2010	167	3	Backhoes	6/14/2013	
DEERE	310SJ	CE6E43	2007	93	2	Backhoes	6/14/2013	6/18/
CASE	821F	PB4E64	2011	169	3	Backhoes	6/14/2013	
GROVE	RT765E-2	LV6V74	2013	240	3	Cranes	6/17/2013	
DEERE	310SG	NA3P73	2006	93	2	Backhoes	6/18/2013	6/19/
TEREX	RT_780	UA6T98	2006	275	3	Cranes	6/19/2013	
CATERPILLAR	D8T	JB5X88	2004	310	2	Tractors	7/1/2013	7/8/
KOMATSU	PC308USL_3	WG8P59	2005	189	2	Excavators	7/1/2013	7/9/
CATERPILLAR	D8T	XF9M63	2006	310	3	Tractors	7/2/2013	
GENIE	Z-13570	YK7C77	2010	74	3	Lifts	7/8/2013	
TEREX	RT555	WS6S45	2005	185	2	Cranes	7/8/2013	7/18/
SKY JACK	SJ66T	BP6P88	2012	64	3	Lifts	7/11/2013	
JLG	800AJ	CS9L37	2008	62	3	Lifts	7/16/2013	
DEERE	210KEP	BY5Y84	2012	70	3	Backhoes	8/5/2013	
HITACHI	225	AF8C99	2011	159	3	Excavators	8/5/2013	
CATERPILLAR	325DL	AN8W58	2008	204	3	Excavators	8/5/2013	
SKY-TRAK	10054	MM7D49	2007	110	3	Forklifts	9/4/2013	
TEREX	RT780	LD9M99	2007	275	3	Cranes	9/4/2013	
CATERPILLAR	450E	XH8D54	2007	157	3	Backhoes	9/4/2013	
DEERE	210LE	PA4G55	2006	78	2	Backhoes	9/10/2013	9/17/
DEERE	624K	XP9L79	2008	146	3	Loaders	9/10/213	

Construction Equipment for Mojave Solar Project – May 2014 Equipment Inver								
Manufacturer	**Model**	**EIN**	**Engine Year**	**Horse Power**	**Engine Tier**	**Vehicle Type**	**Date Arrived**	**Date Si**
SKY-TRAK	10054	XK6T97	2004	110	2	Lifts	9/13/2013	10/11
SNORKEL	TB-85J	RL5M33	2007	64	2	Lifts	9/13/2013	9/17
SANY-HEAVY-IND	SRC865-RT	TS5P46	2010	250	3	Cranes	9/13/2013	
JLG	800AJ-80ART-BO	DV7H57	2011	56	3	Lifts	9/17/2013	
JLG	SKYTRK-10K-RCH	SA4S95	2007	110	3	Forklifts	9/17/2013	
LIEBHERR	LR1200SX	AH8E76	2007	362	3	Cranes	9/17/2013	
GENIE	GTH-5519	NA4U95	2012	67	3	Forklifts	9/17/2013	
SKY-TRAK	1054-10,000-RCH	EU8D48	2006	82	2	Forklifts	9/19/2013	10/11
VOLVO	SD45	HE8X95	2011	99	3	Rollers	9/19/2013	
LIEBHERR	LR1200SX	SY5B57	2006	362	3	Cranes	9/19/2013	
DEERE	310SJ	WX9R94	2011	75	3	Backhoes	9/20/2013	
SKY-TRAK	10054	GL9X33	2010	110	3	Forklifts	9/20/2013	
GEHL	DL1240	DV3U39	2013	115	3	Forklifts	9/20/2013	
GRADALL	534D9	WM5W94	2011	110	3	Forklifts	9/23/2013	
SKY-TRAK	8042	EU5S37	2012	71	3	Forklifts	9/23/2013	
JLG	G12-55A	SW6X98	2011	130	3	Forklifts	9/24/2013	

Construction Equipment for Mojave Solar Project – May 2014 Equipment Inver								
Manufacturer	**Model**	**EIN**	**Engine Year**	**Horse Power**	**Engine Tier**	**Vehicle Type**	**Date Arrived**	**Date Si**
VOLVO	MCT135C	MS7Y68	2011	91	3	Loaders	9/26/2013	
JLG	SKYTRK-10K-RCH	AJ66D98	2007	110	3	Forklifts	9/27/2013	
GENIE	Z-80/60	PJ3W77	2008	74	3	Lifts	9/27/2013	
GENIE	GHT-1056	TR6F45	2013	121	3	Forklifts	9/27/2013	
CASE	580N	SX5S95	2011	84	3	Backhoes	10/2/2013	
GROVE	RT880E	BN6H96	2013	275	3	Cranes	10/2/2013	
JLG	G6-42A	XR9V66	2011	69	3	Forklifts	10/2/2013	
CATERPILLAR	TL1255C	DX9N76	2013	141	3	Forklifts	10/4/2013	
JLG	800AJ	MY6J77	2012	62	3	Lifts	10/4/2013	
JLG	G-1055A	LU4S88	2008	125	3	Forklifts	10/7/2013	
JLG	600S	DA7J87	2012	49	3	Lifts	10/7/2013	
Other	XRM1254	NV8S66	2005	122	2	Lifts	10/7/2013	10/17
TEREX	RT780	CJ4V77	2012	260	3	Cranes	10/7/2013	
LIEBHERR	LR1200	RA6Y75	2006	362	3	Cranes	10/9/2013	
SKY-TRAK	1054-10,000-RCH	MC9W76	2007	110	3	Forklifts	10/10/2013	
LIEBHERR	LR1200SX	NU9L79	2007	362	3	Cranes	10/10/2013	
CATERPILLAR	430E	FE4P69	2008	95	3	Backhoes	10/16/2013	
SKY-TRAK	8042-CAB	SG3T73	2011	110	3	Forklifts	10/16/2013	
DEERE	310K	WG6W88	2013	56	3	Backhoes	10/16/2013	
JLG	6042	FA7K37	2013	85	3	Forklifts	10/18/2013	

Construction Equipment for Mojave Solar Project – May 2014 Equipment Inver								
Manufacturer	**Model**	**EIN**	**Engine Year**	**Horse Power**	**Engine Tier**	**Vehicle Type**	**Date Arrived**	**Date Si**
JLG	G5-19A	AB8T34	2006	100	3	Forklifts	10/18/2013	
GENIE	GTH-1056	PL9W36	2013	121	3	Forklifts	10/22/2013	
TOYOTA	50-4FDK160	WK4X75	2011	168	3	Forklifts	10/22/2013	
CASE	580N	TX5K58	2011	84	3	Backhoes	10/23/2013	
LINK-BELT	225MSR	KG3E74	2011	163	3	Excavators	10/25/2013	
GENIE	S65	TH8R79	2012	49	3	Lifts	11/4/2013	
JLG	10054	KL5S59	2012	100	3	Forklifts	11/7/2013	
BOMAG	BW120AD_4	VU8F45	2006	34	2	Rollers	11/8/2013	11/15
GROVE	TM9120	VC3C38	1993	460	0	Cranes	11/12/2013	11/14
CASE	580N	TX5K58	2011	84	3	Backhoes	11/12/2013	
SKY-TRAK	10054	HL8E83	2012	110	3	Forklifts	11/25/2013	
JCB	3CX14-4EC	TP4C93	2011	68	3	Backhoes	11/25/2013	
HYSTER	H360HD	CU5C99	2007	155	3	Forklifts	11/25/2013	
DEERE	310J_EP	TP5F67	2013	70	3	Backhoes	11/26/2013	
JLG	G6-42A	DL9T78	2011	69	3	Forklifts	11/27/2013	
TREX	RT345XL	JS3S84	2011	160	3	Cranes	11/27/2013	
JLG	G10-55A	TY9H64	2012	130	3	Aerial Lifts	12/12/2013	
JLG	G10-55A	UC3F55	2012	174	3	Forklifts	12/12/2013	
JCB	550-170	PW7E59	2012	99	3	Forklifts	12/16/2013	
JLG	800AJ	VD8B84	2013	61.6	3	Aerial Lifts	12/16/2013	
GEHL	DL1155	XB7G76	2013	115	3	Forklifts	12/16/2013	

Construction Equipment for Mojave Solar Project – May 2014 Equipment Inver								
Manufacturer	**Model**	**EIN**	**Engine Year**	**Horse Power**	**Engine Tier**	**Vehicle Type**	**Date Arrived**	**Date Si**
TEREX	RT450	MT8A46	2011	275	3	Cranes	12/16/2013	
SKY-TRAK	10054	BD7B67	2008	110	3	Forklifts	12/20/2013	
JLG	600AJ	WV7C48	2007	65	3	Aerial Lifts	12/23/2013	
GENIE	Z-80	BE5Y85	2010	74	3	Aerial Lifts	12/23/2013	
OTTOWA	TJ-1000	SH9Y35	2010	220	3	Trucks	1/3/2014	
Other	TJ-5000	PV5L96	2007	280	3	Tractors	1/7/2014	
Other	TJ-5000	BY5E66	2007	280	3	Tractors	1/8/2014	
TRAK	8042	UN8Y65	2012	100	3	Forklifts	1/13/2014	
TRAK	10054	HF8X98	2006	110	2	Forklifts	1/18/2014	1/28/
GEHL	DL 1155	UT5Y35	2012	115	3	Forklifts	1/20/2014	
SKY-TRAK	10054L	DV4V97	2012	100	3	Forklifts	2/3/2014	
JLG	800S	CY3K64	2007	65	2	Lifts	2/5/2014	2/12/
SKY-TRAK	10054	MX6V88	2013	100	3	Lifts	2/5/2014	
CATERPILLAR	TL 1055C	DT8W55	2012	125	3	Forklifts	2/10/2014	
JLG	10K	PJ9M37	2007	110	3	Forklifts	2/12/2014	
TEREX	RT_780_80TON	MR9U89	2005	275	2	Cranes	2/14/2014	2/19/
GENIE	GTH_5519	BD9T36	2012	67	3	Forklifts	2/18/2014	
TEREX	TX5519	TU3D58	2006	62	2	Forklifts	2/18/2014	2/25/
DEERE	210K	AE9V73	2013	56	3	Backhoes	3/10/2014	
JLG	10054	RC6M93	2012	75	3	Forklifts	3/12/2014	

Construction Equipment for Mojave Solar Project – May 2014 Equipment Inver								
Manufacturer	**Model**	**EIN**	**Engine Year**	**Horse Power**	**Engine Tier**	**Vehicle Type**	**Date Arrived**	**Date Si**
DEERE	310K	NL6C48	2013	130	3	Backhoes	3/12/2014	
CASE	580N	SX5S95	2011	84	3	Backhoes	3/18/2014	
OTHER	TJ-5000	VT5V79	2007	280	3	Tractors	3/20/2014	
JLG	C6-42A	TX8D67	2012	100	3	Forklifts	3/20/2014	
OTHER	XRM1254	EK9A69	2008	99	3	Lifts	3/21/2014	
SKY-TRAK	10054	GM7C76	2013	100	3	Forklifts	3/25/2014	
JLG	800AJ	JF5J83	2002	64.5	0	Lifts	3/25/2014	3/28/
JLG	G6-42A	UH3U65	2011	99	3	Forklifts	3/27/2014	
JCB	930	XN9J99	2011	84	3	Forklifts	3/27/2014	
SKY-TRAK	10054	PY8P48	2012	74	3	Forklifts	5/7/2014	
JLG	6042	JT4H67	2014	85	3	Forklifts	5/7/2014	
SKY-TRAK	10054	XL9A84	2007	110	3	Forklifts	5/8/2014	
GENIE	GTH-1056	YE9N46	2011	114	3	Forklifts	5/9/2014	
JLG	1200SJP	WK5B84	2012	74	3	Boom	5/16/2014	

Appendix B
Biological Resources

Mojave Solar Project
Monthly Compliance Report
San Bernardino County, California

May 2014 Reporting Period

Biological Resources
Monthly Monitoring Report
Conditions of Certification
BIO-2, BIO-3, BIO-4, BIO-5, BIO-7, BIO-11, BIO-14, BIO-18

May 2014 Reporting Period

Prepared for:

Mojave Solar LLC

13911 Park Avenue, Suite 206
Victorville, California 92392

Prepared by:

CH2MHILL

2485 Natomas Park Drive
Sacramento, California 95833

June 2014

Table of Contents

Section		Page
1	Introduction	1
	1.1 Status of Biological Staff	1
2	Ongoing Construction Monitoring	2
	2.1 Construction Activities	2
	2.2 Rain Events	3
	2.3 Hazardous Material Spills	3
	2.4 Non-compliance Notifications and Reports	4
	2.5 Compliance Concerns	5
	2.6 Desert Tortoise	6
	2.7 Invasive Weeds	7
	2.8 Kit Fox and Other Mammals	7
	2.9 Nesting Birds	8
	2.10 Raven Monitoring, Management, and Control	8
	2.11 Wildlife Injuries and Mortalities	8
	2.12 Other Species	8

List of Figures

Figure		Page
1	Regional Map	10
2	Biological Resources, May 2014	11

List of Attachments

1 Agency Approval Status of Biological Staff

2 WEAP Summary and May Training Logs

3 Monthly Common Raven Monitoring Results

4 Observed Wildlife Species List

1 Introduction

Per the California Energy Commission's (CEC) Abengoa Mojave Solar Project Commission Decision, CEC-800-2010-008-CMF, Docket Number 09-AFC-5C, this monthly compliance report (MCR) summarizes compliance with biological resource protection requirements during construction activities from May 1 through May 31, 2014, on the Mojave Solar Project (MSP) in San Bernardino County, California (see Figure 1, figures are at the end of this report).

This report does not repeat information provided in previous MCRs and assumes environmental compliance was met unless otherwise noted.

As provided in the CEC Final Decision, the following biological conditions of certification (COC) pertaining to monitoring activity covered by this MCR include, but are not limited to:

- BIO-2 Designated Biologist Duties
- BIO-3 Biological Monitor Selection, Qualifications and Duties
- BIO-4 Designated Biologist and Biological Monitor Authority
- BIO-5 Worker Environmental Awareness Program (WEAP)
- BIO-6 Biological Resources Mitigation Implementation and Monitoring Plan (BRMIMP) Development and Compliance
- BIO-7 Impact Avoidance and Minimization Measures
- BIO-11 Desert Tortoise (*Gopherus agassizii*) Exclusion Fencing, Clearance Surveys, and Translocation Plan
- BIO-14 American Badger (*Taxidea taxus*) and Desert Kit Fox (*Vulpes macrotis*) Impact Avoidance and Minimization Measures
- BIO-18 Common Raven (*Corvus corax)* Monitoring, Management, and Control

This MCR is also being provided to California Department of Fish and Wildlife (CDFW) and United States Fish and Wildlife Service (USFWS).

1.1 Status of Biological Staff

Attachment 1 provides a summary table of the biological staff submitted for approval on this project and the status of their agency approvals. In May, no new biological monitors were submitted to the agencies for approval. Two CEC-approved biological monitors, Mark Bratton and Ed Morgan are pending USFWS approval as desert tortoise Authorized Biologists.

2 Ongoing Construction Monitoring

This section summarizes biological monitoring activities conducted by CH2M HILL throughout May 2014.

Please refer to sections "Desert Tortoise," "Invasive Weed Species," "Kit Fox and Other Mammals," "Nesting Birds," "Raven Monitoring, Management, and Control," "Wildlife Injury and Mortalities," and "Other Species" for specific information about wildlife and plants found by biological monitors in May.

The MSP requires that all onsite staff receive the WEAP training (via DVD) and a brochure prior to start of work. A total of 428 new staff went through WEAP training in May 2014. Attachment 2 provides an ongoing summary table of the project's WEAP attendance and the hard copy sign-in training logs for May 2014.

On a typical construction day, one biological monitor or designated biologist:

- Monitors Harper Dry Lake Road at least every 3 hours during the desert tortoise active period (April through May). Due to desert tortoise observations on Harper Lake Road, biological staff monitored the road more often than every 3 hours during the morning and afternoons and when temperatures are optimal for tortoise movement;
- Monitors active construction areas, parking lots, laydown yards, and any areas of potential threat to vegetation, soils, or wildlife;
- Inspects desert tortoise exclusion fences and tortoise guards as required;
- Inspects potential entrapment areas (e.g., trenches);
- Monitors for formation of potential standing water;
- Inspects kit fox exclusion buffers and downloads motion-sensor cameras at shelter sites;
- Conducts raven observations and point-count surveys;
- Conducts bi-weekly breeding season raven nest search surveys (March through June);
- Receives reports of hazardous waste spills to the designated biologist;
- Inspects pipes greater than 3 inches in diameter that are less than 8 inches above the ground surface; and
- Performs other special biological-resources-related activities, as required.

2.1 Construction Activities

In May, construction activities occurred in all project sectors, with the highest concentration in the Alpha and Beta power block areas. In Alpha, ground disturbance included various foundations, bore holes, buildings, water connections, trenching for grounding, pressure testing and insulating heat transfer fluid (HTF) pipes, conduits, water lines, and cable installation. In Beta, ground disturbance included various foundations, bore holes, buildings, water connections, trenching for grounding, pressure testing and insulating HTF pipes, conduits, water lines, and cable installation. Additionally, systematic trash removal by sector continued during the month and maintenance of desert tortoise

guards and exclusion fences occurred on an as-needed basis. The construction schedule includes day and night shifts during the regular work week and limited shifts on weekends.

The new Beta well construction continued in May. Due to anticipated discharges, biological staff checked the wetland discharge pipe on a daily basis.

2.1.1 Desert Tortoise Exclusion Fence Repairs

In May, biological staff made comprehensive weekly inspections of the perimeter desert tortoise exclusion fence, which is more frequent than the monthly fence inspections required by BIO-11 and the Biological Opinion.

On May 1, biological staff notified construction staff of the need to modify the existing tortoise fence and guard at the Southern California Edison (SCE) gate, since the fencing there had not been replaced with the newer fencing materials.

On May 12, biological staff observed that the removal of the guard shack at the entrance of Beta East caused a breach in the external tortoise fencing. Construction staff were notified and the issue was resolved the same day.

Biological staff were notified in May that San Bernardino County Public Works would be repairing breaks in the tortoise fence along Harper Lake Road. As of May 31, the majority of the repairs had been completed.

2.2 Rain Events

One minor rain event occurred on May 21. All fences were inspected the next day and no breaches were observed. The evaporation ponds were not found to contain any water from the event.

2.3 Hazardous Material Spills

Several hazardous spills were reported at MSP in May, including diesel spills, gasoline spills, and HTF spills. Biological staff were notified and all spills were subsequently cleaned up.

On May 7, biological staff contacted the CEC seeking verification that the HTF neutralization process (wherein the contaminated soil is left in the open to be exposed to UV radiation and contaminants are allowed to evaporate) does not pose any potential risks to wildlife. On May 9, the CEC responded that the issue was considered during the Biological Assessment (BA), and that HTF neutralization poses no risk to wildlife assuming that it is implemented as stated in the BA.

The commissioning team continued using HTF for final pressure testing and filling of the Alpha and Beta pipes in May. Due to the hazardous nature of HTF and the environmental concern for prompt cleanup, biological staff worked with Abeinsa EPC (AEPC) to implement a reporting system that would comply with both the BIO-7 requirement that the designated biologist be immediately notified of hazardous materials spills, as well as other project-specific environmental cleanup requirements. The purpose of notifying biological staff immediately is to ensure that cleanup is timely and sufficient to minimize the risk to wildlife. Because drips of HTF were anticipated during the pressure testing phase, and

cleanup of hazardous materials is conducted immediately by trained personnel, biological staff agreed that nominal drips that result in approximately 2 pints of soil contamination (about one shovelful) could be reported at the end of the week. Once AEPC reports a spill and the area is opened for safe entry by general construction personnel, then biological staff systematically confirm that cleanup was conducted for each reported spill. AEPC staff will immediately notify biological staff of any hazardous material spill of HTF that is greater than pressure testing drips (approximately one shovelful of contaminated soil) or any other hazardous material.

During May, numerous HTF pressure testing drips were reported and assessed by biological staff. On May 29, a spill of approximately 28 gallons of HTF was reported in Beta East solar field. Contaminated soil was removed and biological staff were notified.

2.4 Non-compliance Notifications and Reports

Two formal non-compliance reports (NCRs) were issued to MSP in May.

NCR-6: Wildlife Entrapment

On May 1, NCR-6 was issued to MSP. On March 11, a Migratory Bird Treaty Act (MBTA)-protected species, northern flicker (*Colaptes auratus*), was found dead inside an HTF tunnel under Harper Lake Road after entering through an aboveground gate house. Biological staff requested several times throughout the month of April that MSP block the entrance of the tunnels. Biological staff provided construction personnel time to finish insulating the pipes before placing the exclusion netting in the gate house entrances; however, by the time the insulation had all been installed, exclusion netting had not been properly placed to prevent further wildlife entrapment.

Resolution

On May 1, MSP construction staff properly installed the exclusion netting in the gate houses; thereby, preventing the risk of further wildlife entrapment. On May 14, a formal resolution to NCR-6 was sent to the CEC.

NCR-7: Unauthorized Road use

On May 2, NCR-7 was issued to MSP. Initially, on February 15, MSP was issued NCR-4 for unauthorized road use. Abeinsa EPC responded with several measures to stop unauthorized road use by project personnel, including, but not limited to: erecting physical road blocks on the Beta perimeter roads; staffing a permanent security guard at the intersection of Santa Fe and Harper Lake roads; and deactivating the site badges of those individuals caught traveling on unauthorized roads.

However, on April 28 and May 1, several vehicles were observed using unauthorized roads to leave the project site. The resolution for NCR-4 proved inadequate as construction personnel were still being observed using unauthorized roads.

Resolution

MSP agreed to staff additional guards at the locations where unauthorized road use was occurring. On May 16, the CEC accepted the resolution provided that they are sent daily and weekly summary notifications of any observed or reported unauthorized road use. CEC

agreed to make a determination in June as to whether unauthorized road use has decreased, and will sign off on the resolution at that time.

2.5 Compliance Concerns

Biological staff managed several other biological compliance issues. They are described below.

2.5.1 Trash

Since the beginning of the year, trash disposal and control at MSP has improved; however, trash compliance does not yet meet permit requirements.

Despite improvements to trash disposal, some of the smaller AEPC subcontractors were still out of compliance on trash management in May. Biological staff engaged these contractors in the field regarding ongoing food waste issues such as attracting wildlife by using unapproved containers, overflowing containers, etc. Repeat offenders, and refusals to comply with guidance from biological staff, were referred to AEPC Health and Safety who resolved the issue. AEPC also prepared notices for buggies stating that loose trash in the bed is against workplace rules and it needed to be removed. Daily removal of trash from site has proven unattainable because no waste management service is available to AEPC to provide daily service. Consequently, AEPC replaced small waste bins with larger bins that are less likely to overflow between service intervals. Biological staff are of the opinion that the issue is being slowly resolved.

2.5.2 Offsite Parking

Temporary and long-term offsite parking was observed by biological staff in May. MSP staff were observed temporarily parking offsite along Lockhart Road to load and unload shipments, stage construction vehicles, or speak on the phone. Both biological and AEPC staff engaged the operators of the vehicles and instructed them to conduct construction business within the desert tortoise guards or to inspect underneath their vehicles for desert tortoise prior to moving them. In cases of long-term storage when the operator was not present, biological staff deferred to AEPC who placed a notice on the vehicle of the violation.

2.5.3 Area of Critical Environmental Concern (ACEC) Use

On May 13, biological staff observed MSP staff using the ACEC picnic area located offsite. Since the ACEC picnic area is located outside the project perimeter, biological staff again requested that no one use these areas. On May 14, MSP staff sent out notification that the ACEC picnic areas were off limits.

2.6 Desert Tortoise

In May, no construction activities required desert tortoise clearance surveys.

No desert tortoises were observed on the project site in May; however, one desert tortoise was observed by biological staff on Lockhart Road. On May 29, an adult male desert tortoise was found by MSP staff on Lockhart Road and the USFWS Authorized Biologist (AB) was notified immediately. The tortoise was found approximately halfway between the Beta West fence and the house located closest to this fence (Figure 2). MSP staff observed the tortoise walking in the road and monitored its safety until the AB arrived. The individual had no signs of disease or trauma and appeared healthy. The individual did not void its bladder during the interaction. Approximate midline carapace length (MCL) was 260 mm. The USFWS AB relocated this individual away from the road and nearby houses.



Photograph 1. Adult male tortoise observed on Lockhart Road May 29.

2.7 Invasive Weeds

One target invasive weed, London rocket (*Sisymbrium irio*), was observed in May. This species is included in the California Invasive Plant Council (Cal-IPC) "high" or "moderate" dispersal or establishment rating and in the project's *Tamarisk Eradication, Monitoring and Reporting Program* (Tamarisk Plan). Two other weed species, Russian thistle (*Salsola tragus*) and fivehook bassia (*Bassia hyssopifolia*) were also observed onsite. Both of these species have only one of the Cal-IPC dispersal or establishment rating as "high" or "moderate." Although these two species are not required to be removed per the Tamarisk Plan, the site must be devoid of vegetation during operations. Therefore, they will ultimately need to be removed.

In May, AEPC manually removed invasive weeds throughout the site. Because London rocket is establishing throughout the solar fields, roads, and fence lines, AEPC is preparing in June to apply herbicide, or burn where appropriate, to control this species.

2.8 Kit Fox and Other Mammals

As of the end of May, there were six active kit fox shelter sites, DKF #3, 4, 5, 6, 7, and 8 (Figure 2). DKF #3 through #7 are located within a single exclusion buffer in the Alpha West solar field. DKF #8 was newly discovered in May.

Motion sensor cameras recorded consistent activity by two adult kit foxes and their pups at DKF #3 until May 13. On May 22, it was reported to biological staff that the kit foxes had moved under several conex storage boxes in a laydown yard approximately 500 meters north of the existing buffer area. Construction staff removed all of their materials from the area and a new buffer was erected around DKF #8. Kit fox activity is now concentrated at DKF #8, with occasional visits to the other shelter sites being recorded on motion sensor cameras. Due to the location of DKF #8 in a heavily trafficked area, MSP staff were advised to follow site rules concerning the storage of materials in order to avoid use of these materials by wildlife.

DKF #3 through #8 were continuously active throughout May by two adult kit foxes and their pups. The pups' activity level increased throughout the month, and as of May 31, they are often making exploratory trips away from the shelter site as observed by MSP and biological staff during the day.

In May, there were also numerous observations of kit fox by construction personnel throughout the site (Figure 2). The most common sighting was passing through the Alpha West and Alpha East security gates in the early morning. Additionally, signs of kit fox activity (including tracks and scat) were found throughout the site.

Biological staff inspected the integrity of the exclusion buffers and downloaded the motion-sensor camera on a daily basis.

On May 15, 16, 19, 20, 21, 22, 23, 23, 24, 28, 29, and 30, biological staff monitored construction crews working within the 250-foot exclusion buffers. Prior to working within the buffer, construction crews signed a protocol verifying their understanding of correct procedure within the exclusion buffer. Additionally, all construction crews were verbally briefed before entering the buffer. Due to the presence of pups, the biological staff limited

construction crews to walking within the buffer and limited driving to less than 5 mph when driving within the exclusion area. Prior to working within the buffer, biological staff checked the motion sensor camera to confirm whether the kit fox were within the shelter site. Depending on the type of construction activity, biological monitors also closed the adjacent solar field perimeter road to ensure that the kit fox would have a clear escape path if they exited the shelter sites.

2.9 Nesting Birds

In May, biological monitors continued to look for potential bird nesting behavior in the Alpha and Beta cooling towers by MBTA-protected birds. No MBTA species were observed nesting in the cooling towers. Biological staff observed use of the area by house sparrows (*Passer domesticus*), which is not an MBTA-protected species.

Biological staff will continue to monitor the bird deterrents installed in the cooling towers.

AEPC has agreed to notify biological staff 2 weeks in advance of pumping any water through the cooling towers.

2.10 Raven Monitoring, Management, and Control

Common raven monitoring activities continued on the MSP site per BIO-18 and as outlined in the *Common Raven Monitoring, Management and Control Plan* (Raven Plan). The May Monthly Common Raven Monitoring Results provides information on monitoring activities, survey methods, maps, incidental raven observations, point count survey results, breeding season raven nest search surveys, and datasheets (Attachment 3).

2.11 Wildlife Injuries and Mortalities

2.11.1 Migratory Bird Treaty Act Protected Species

In May, one injured MBTA-protected species was observed at MSP.

On May 1, an injured mourning dove (*Zenaida macroura*) was reported in Alpha power block. The individual appeared sick, was lethargic, emaciated, covered in feces, and showed evidence of ecto-parasites. The dove was transferred to a licensed rehabilitation center who assumed care of the bird.

MSP was issued a 6-month USFWS *Migratory Bird Special Purpose Utility Salvage Permit – Solar* (SPUT permit) that authorizes project staff to collect, transport, and possess carcasses of species protected by the MBTA. The current MSP SPUT permit expires July 3, 2014.

2.12 Other Species

In May, one black-tailed jack rabbit (*Lepus californicus*) and one gopher snake (*Pituophis catenifer*) were found dead on Harper Lake Road. All remains were buried offsite by the biological staff.

On May 8, a rock dove (*Columba livia*) was observed in the TAB parking lot by MSP staff. MSP staff reported that the dove appeared uninjured, but that they were concerned about it being at risk of harm while in a heavily trafficked area. Biological staff relocated the dove to the ACEC.

A list of wildlife species observed in May is included in Attachment 4. No sensitive species were observed at MSP.

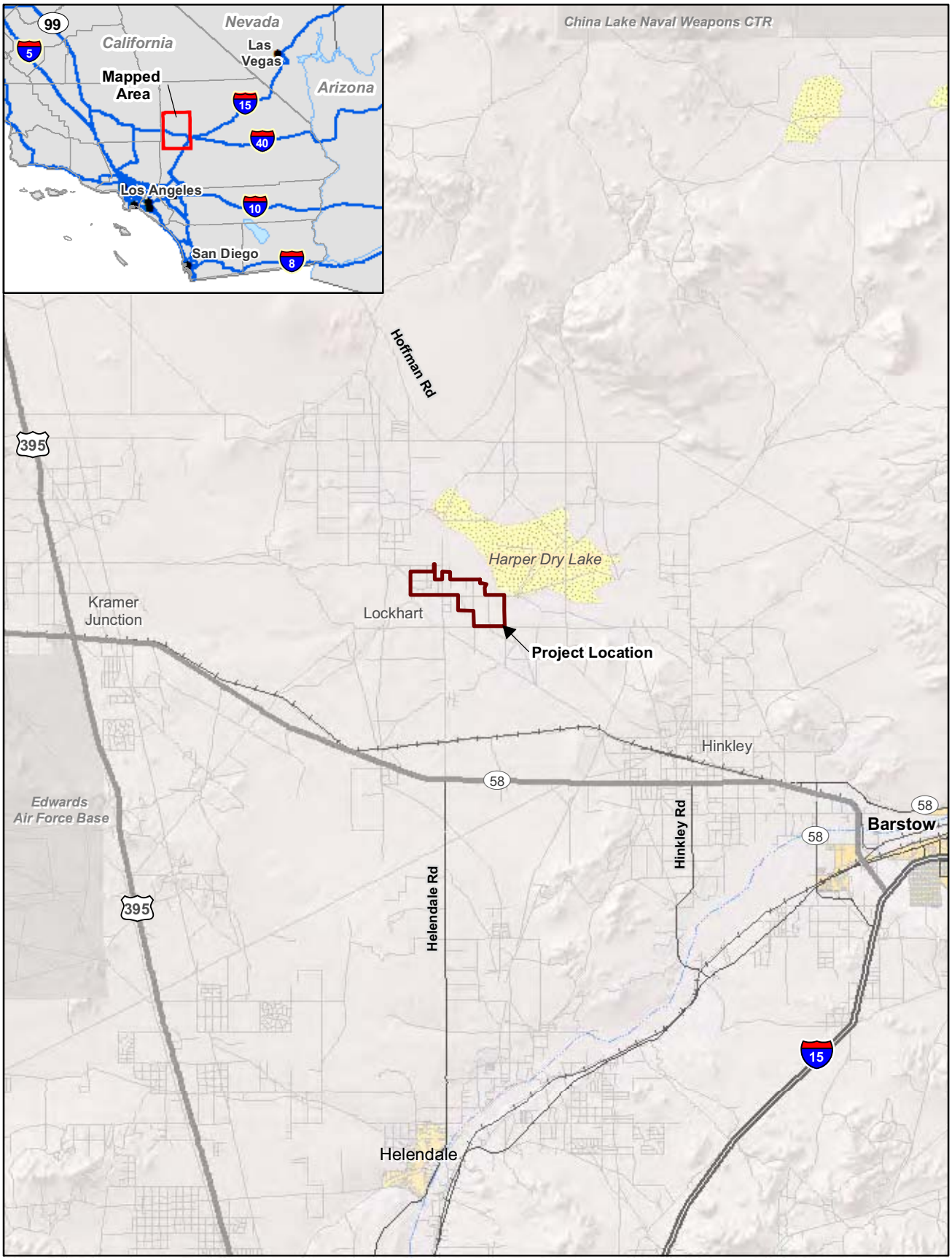

LEGEND

Project Boundary

N

0 2.5 5
Miles

FIGURE 1
Regional Map
Abengoa Mojave Solar Project
San Bernardino County, California

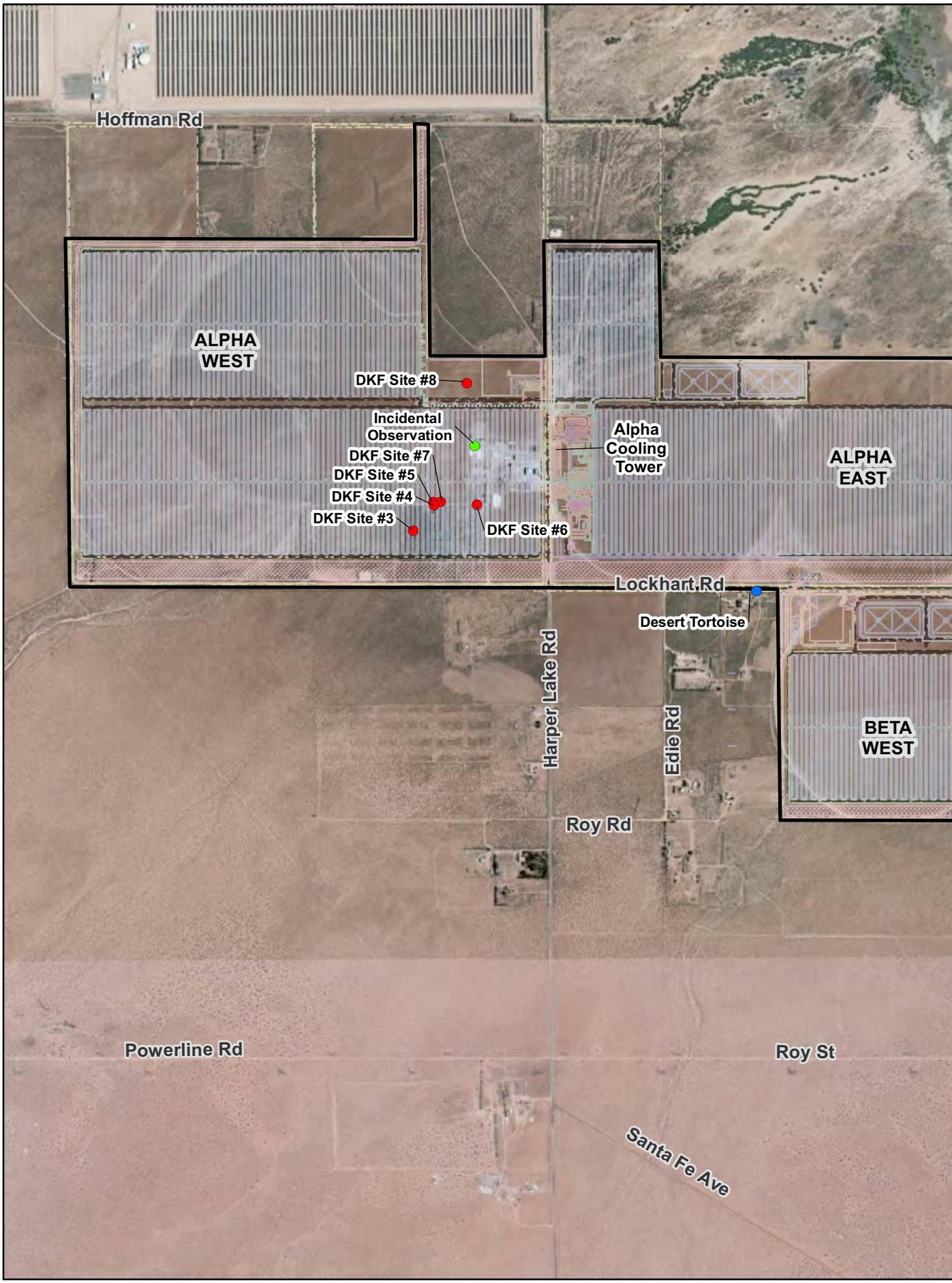
Hoffman Rd
ALPHA WEST
DKF Site #8
Incidental Observation
DKF Site #7
DKF Site #5
DKF Site #4
DKF Site #3
DKF Site #6
Alpha Cooling Tower
ALPHA EAST
Lockhart Rd
Desert Tortoise
Harper Lake Rd
Edie Rd
BETA WEST
Roy Rd
Powerline Rd
Roy St
Santa Fe Ave

Attachment 1
Agency Approval Status of Biological Staff

Agency Approval Status of Biological Monitor and Designated Biologist
Abengoa Mojave Solar Project

Biologist	CEC				CDFW			
	BM		DB		BM		DB	
	Submitted	Approved	Submitted	Approved	Submitted	Approved	Submitted	Approved
Brent Finley	5/6/2013	5/9/13	—	—	—	—	—	—
Tim Hamaker	5/9/2013	5/9/13	—	—	—		—	—
Josh Holloway	—	—	5/10/2013	5/13/13 (Alt-DB)	—	—	—	—
Morgan King	—	—	5/2/2013	5/9/13 (DB)	—	—	—	—
Linda Sands	5/9/2013	5/9/13	5/2/2013	Denied as Alt-DB 5/9/13	—	—	—	—
Bruce Weise			5/10/2013	5/13/13 (Alt-DB)	—	—	—	—
Amy Trexler	6/21/2013	7/30/13	—	—	—	—	—	—
Catherine Wangen	6/21/2013	7/30/13	—	—	—	—	—	—
Cindy Newman	6/21/2013	7/30/13	—	—	—	—	—	—
Susan Carlton	6/21/2013	7/30/13	—	—	—	—	—	—

Agency Approval Status of Biological Monitor and Designated Biologist
Abengoa Mojave Solar Project

	CEC				CDFW			
	BM		DB		BM		DB	
Biologist	Submitted	Approved	Submitted	Approved	Submitted	Approved	Submitted	Approved
Ursula Rogers (Carliss)	6/21/2013	7/8/13	—	—	—	—	—	—
Eric Somers	7/30/2013	8/6/13	—	—	—	—	—	—
Joey Verge	7/30/2013	8/6/2013	—	—	—	—	—	—
William Clark	8/29/2013	9/4/2013	—	—	—	—	—	—
Josh Utter	8/29/2013	9/4/2013	—	—	—	—	—	—
Michael Garvey	8/29/2013	9/4/2013	—	—	—	—	—	—
Erich Green	3/11/2011	3/11/2011	—	—	—	—	—	—
Ed Morgan	2/20/2014	3/7/14	—	—	—	—	—	—
Mark Bratton	2/20/2014	3/7/14	—	—	—	—	—	—

Legend:

CEC= California Energy Commission

CDFW=California Department Fish and Wildlife

USFWS= United States Fish & Wildlife Service

BM= Biological Monitor

AB=Authorized Biologist

Alt-DB = Alternate Designated Biologist

DB=Designated Biologist

Attachment 2
WEAP Summary and Training Logs

WEAP Summary Table through May 31, 2014 Mojave Solar Project	
Month Training Conducted	**Monthly Total of WEAP Attendees***
Mar-11	50
Apr-11	9
May-11	18
Jun-11	2
Jul-11	27
Aug-11	63
Sep-11	82
Oct-11	75
Nov-11	41
Dec-11	68
Jan-12	52
Feb-12	112
Mar-12	116
Apr-12	158
May-12	208
Jun-12	167
Jul-12	156
Aug-12	271
Sep-12	276
Oct-12	268
Nov-12	93
Dec-12	137
Jan-13	183
Feb-13	195
Mar-13	255
Apr-13	295
May-13	408
Jun-13	341
Jul-13	244
Aug-13	187
Sep-13	206

WEAP Summary Table through May 31, 2014 Mojave Solar Project	
Month Training Conducted	**Monthly Total of WEAP Attendees***
Oct-13	387
Nov-13	213
Dec-13	454
Jan-14	642
Feb-14	866
Mar-14	560
Apr-14	376
May - 14	428
Total	8,689
*Attendance is based on training sign-in sheets	

Certification of Completion
Worker Environmental Awareness Program
Mojave Solar Project (09-AFC-5)

This is to acknowledge these individuals have completed a mandatory California Energy Commission-approved Worker Environmental Awareness Program (WEAP). The WEAP includes pertinent information on biological, cultural, and paleontological resources for all personnel (that is, construction supervisors, crews, and plant operators) working on site or at related facilities. By signing below, the participant indicates that he/she understands and shall abide by the guidelines set forth in the program materials. Include this completed form in the Monthly Compliance Report.

No.	Employee Name	Title/Company	Signature
1.	JOE ROBERTSON	LABOR - MILCO	Joe A. Robertson
2.	ANDREW SCHAFER	ELECTRICIAN/HIGH LIGHT	[illegible]
3.	Michael Allen	Expeditor/milco	[illegible]
4.	John Karolczak	Iron worker milco	[illegible]
5.	Moises Del Rio	Inspector/MB Pro	[illegible]
6.	MARK RICE	Electrician/Ken Curran	Mark Rice
7.	Manuel Rodriguez	labor/milco	[illegible]
8.	Michael OSBORNE	Labor Milco	Michael Osborne
9.	HENRY Zavala	groundman/Hotline	[illegible]
10.	LUKE ENRIQUEZ	KEN CURRAN ELECTRIC	[illegible]
11.	Jesus Nuno	Teamster	[illegible]
12.	Alfredo Coronado	Labor	Alfredo Coronado
13.	Horacio Martinez	Labor	[illegible]
14.	JORGE AMAYAC	LABOR	Jorge Amayac
15.	ROGER SHARP	PF	[illegible]
16.	Alex Sinkevitch	PF	[illegible]
17.	DAVID ROGERS	PF/MILCO	[illegible]
18.	Albert CAIN	labor milco	Albert Cain
19.	GARY MADONNA	PF/FHI	[illegible]
20.	Kris Bohm	FHI	[illegible]
21.	Jason Zeeb	B.M.	[illegible]
22.	Eduardo Aguilar	B.M	[illegible]
23.	TREVOR EMRAY	FITTER/FHI	[illegible]
24.	Frank Loera III	Substation tech/Hotline	[illegible]
25.	Lené Glover	Lab/milco	[illegible]
26.	Eliseo Gutierrez	Labor Milco	[illegible]
27.	Felipe V. Araujo	Labor Milco	Felipe V. Araujo
28.	David Gam	Ironworker/CNC	[illegible]
29.	Cedric Swan	Labor Milco	Cedric Swan
30.	Rick Cooney	Boilermaker	Rick Cooney

Biological Trainer: _____ Signature: _____ Date: 5/1/13

Cultural Trainer: _____ Signature: _____ Date: __/__/__

Paleo Trainer: _____ Signature: _____ Date: __/__/__

Certification of Completion
Worker Environmental Awareness Program
Mojave Solar Project (09-AFC-5)

This is to acknowledge these individuals have completed a mandatory California Energy Commission-approved Worker Environmental Awareness Program (WEAP). The WEAP includes pertinent information on biological, cultural, and paleontological resources for all personnel (that is, construction supervisors, crews, and plant operators) working on site or at related facilities. By signing below, the participant indicates that he/she understands and shall abide by the guidelines set forth in the program materials. Include this completed form in the Monthly Compliance Report.

No.	Employee Name	Title/Company	Signature
1.	Todd Stiefel	Sunbelt	Todd Stiefel
2.	JOSE AGUSTIN MORO GARCIA	INABENSA USA	
3.			
4.			
5.			
6.			
7.			
8.			
9.			
10.			
11.			
12.			
13.			
14.			
15.			
16.			
17.			
18.			
19.			
20.			
21.			
22.			
23.			
24.			
25.			
26.			
27.			
28.			
29.			
30.			

Biological Trainer: _____ Signature: _____ Date: 5/6/13

Cultural Trainer: _____ Signature: _____ Date: ___/___/___

Paleo Trainer: _____ Signature: _____ Date: ___/___/___

Certification of Completion
Worker Environmental Awareness Program
Mojave Solar Project (09-AFC-5)

This is to acknowledge these individuals have completed a mandatory California Energy Commission-approved Worker Environmental Awareness Program (WEAP). The WEAP includes pertinent information on biological, cultural, and paleontological resources for all personnel (that is, construction supervisors, crews, and plant operators) working on site or at related facilities. By signing below, the participant indicates that he/she understands and shall abide by the guidelines set forth in the program materials. Include this completed form in the Monthly Compliance Report.

No.	Employee Name	Title/Company	Signature
1.	Albert Valles	MILCO	[illegible]
2.	Donald R Martinez	Milco	[illegible]
3.	Israel Cervantes	MILCO	[illegible]
4.	SHANE MEDLEY	Milco	[illegible]
5.	Travis Remegabe	Milco	[illegible]
6.	Kevin McCallister	Milco	[illegible]
7.	CESAR TOLEDO	Milco	[illegible]
8.	Jesse Ellis	Metroguard	Jesse Ellis
9.	Nick Waters	Milco	[illegible]
10.	Shannon Butler	Milco	[illegible]
11.	DAVID ELLIOTT	MILCO	DElliott
12.	SERGIO HERNANDEZ	LARGO	[illegible]
13.	Luis Solis	Carpenter/Largo	[illegible]
14.	Luis E Mendez	Largo	Luis E Mendez
15.	Jared Tietjen	PTI	[illegible]
16.	Jacob Manatsay	Straight line	[illegible]
17.	CHAN HIERS	MILCO	Chan Hiers
18.	Mave Lapsley	Metro guard	[illegible]
19.	PARK IM	MILCO	[illegible]
20.	Kris Buckley	Straight Line	[illegible]
21.	Scott Wallace	ARB	Scott Wallace
22.			
23.			
24.			
25.			
26.			
27.			
28.			
29.			
30.			

Biological Trainer: _____ Signature: _____ Date: 05/06/___

Cultural Trainer: _____ Signature: _____ Date: ___/___/___

Paleo Trainer: _____ Signature: _____ Date: ___/___/___

Certification of Completion
Worker Environmental Awareness Program
Mojave Solar Project (09-AFC-5)

This is to acknowledge these individuals have completed a mandatory California Energy Commission-approved Worker Environmental Awareness Program (WEAP). The WEAP includes pertinent information on biological, cultural, and paleontological resources for all personnel (that is, construction supervisors, crews, and plant operators) working on site or at related facilities. By signing below, the participant indicates that he/she understands and shall abide by the guidelines set forth in the program materials. Include this completed form in the Monthly Compliance Report.

No.	Employee Name	Title/Company	Signature
1.	Gabriel Torres	Largo	
2.	Julio Ramos.	Largo.	
3.	Francisco Gonzalez	Largo	
4.	Richard "Tim" Silzenadel	CMC Rebar	
5.	Lorenzo Marquez SR.	CMC Rebar	
6.	Luis F. Restrepo	Milco	
7.	Steven Williamson	Hill Crane	
8.	Robert Robinson	Hill Crane	
9.	Danny Villasenor	Milco Inc	
10.	Daniel P Young	Milco Inc	
11.	Mike Rios	Milco Inc	
12.	Debby McHenry Smethers	Milco	
13.	Sonia Rico	Adm. Asst. Interns	
14.	Joshua Tate	Milco	
15.	Carlos Garcia	Milco	
16.	Gloriella Cardenas	CH2M Hill	
17.	Eric Hall	CH2M Hill	
18.	Jesse Shelmire	CH2M Hill	
19.	Kurt Lambert	CH2M Hill	
20.	Anthony Davis	Milco	
21.	Michael M. DeGiovine	CH2M Hill	
22.	Humphrey Calicher	CH2M Hill	
23.	Daniel Ewers	CH2M Hill	
24.	Sonia Sifuentes	CH2M Hill	
25.	Erica Maier	CH2M Hill	
26.	Phillip Reid	CH2M Hill	
27.			
28.			
29.			
30.			

Biological Trainer: _____ Signature: _____ Date: 05/04/__

Cultural Trainer: _____ Signature: _____ Date: __/__/__

Paleo Trainer: _____ Signature: _____ Date: __/__/__

Certification of Completion
Worker Environmental Awareness Program
Mojave Solar Project (09-AFC-5)

This is to acknowledge these individuals have completed a mandatory California Energy Commission-approved Worker Environmental Awareness Program (WEAP). The WEAP includes pertinent information on biological, cultural, and paleontological resources for all personnel (that is, construction supervisors, crews, and plant operators) working on site or at related facilities. By signing below, the participant indicates that he/she understands and shall abide by the guidelines set forth in the program materials. Include this completed form in the Monthly Compliance Report.

No.	Employee Name	Title/Company	Signature
1.	Brian Hansel	milco	
2.	Heriberto Villarreal	Milco	
3.	JOSEPH FAGA	Milco	
4.	THOMAS ORTEGA	Milco	
5.	Gonzalo Serrato	Service Master Clean	
6.	Mike Spimech	milco	
7.	Sean Andersen	LABC	
8.	DAN LUNN	BIGGE	
9.	Monte Gibbs	BIGGE	
10.	Gary Wreen	ARB	
11.	Keylor L. Quinonez	ARB	
12.	Max Roth	ARB	
13.	Gilbert Ramirez	Milco	
14.	Roland Goseyun	Milco	
15.	ALFREDO AGUILERA	Milco	
16.	Ralph Marquez	Milco	
17.	David P Diaz	milco	
18.	Trent Goodwin	ABEINSA	
19.	Sergio Roa	Siemens contractor	
20.	Ron Bauer	Electric Power Systems	
21.	Manuel Kinsey	Electric Power Sys.	
22.	Ruel Guompton	Electric Power Systems	
23.	BRIAN REDLIN	ELECTRIC POWER SYS	
24.	DONNEY Crawford	ELECTRIC Power Sys	
25.	NICHOLAS NIENKAMP	ELECTRIC POWER	
26.	Isaac Cervantes	MILCO	
27.			
28.			
29.			
30.			

Biological Trainer: _____ Signature: _____ Date: 05/07/__

Cultural Trainer: _____ Signature: _____ Date: __/__/__

Paleo Trainer: _____ Signature: _____ Date: __/__/__

Certification of Completion
Worker Environmental Awareness Program
Mojave Solar Project (09-AFC-5)

This is to acknowledge these individuals have completed a mandatory California Energy Commission-approved Worker Environmental Awareness Program (WEAP). The WEAP includes pertinent information on biological, cultural, and paleontological resources for all personnel (that is, construction supervisors, crews, and plant operators) working on site or at related facilities. By signing below, the participant indicates that he/she understands and shall abide by the guidelines set forth in the program materials. Include this completed form in the Monthly Compliance Report.

No.	Employee Name	Title/Company	Signature
1.	Charles Speiser	BM / milco	
2.	BRIAN ORTIZ	BMW / MILCO	
3.	Alex Catano	IW / cmc Rebar	
4.	Chris Jorgensen	BM / Milco	Chris Jorgensen
5.	Ken LAKEY	JL / Mountain Power	
6.	Antwaine Holmes Jr	FHI	
7.	PHILLIP WILLIAMS	EPS	
8.		NAM / CH2M Hill	
9.	Danny Sandoval	Murray Co.	
10.			
11.			
12.			
13.			
14.			
15.			
16.			
17.			
18.			
19.			
20.			
21.			
22.			
23.			
24.			
25.			
26.			
27.			
28.			
29.			
30.			

Biological Trainer: _____ Signature: _____ Date: ___/___/___

Cultural Trainer: _____ Signature: _____ Date: ___/___/___

Paleo Trainer: _____ Signature: _____ Date: ___/___/___

Certification of Completion
Worker Environmental Awareness Program
Mojave Solar Project (09-AFC-5)

This is to acknowledge these individuals have completed a mandatory California Energy Commission-approved Worker Environmental Awareness Program (WEAP). The WEAP includes pertinent information on biological, cultural, and paleontological resources for all personnel (that is, construction supervisors, crews, and plant operators) working on site or at related facilities. By signing below, the participant indicates that he/she understands and shall abide by the guidelines set forth in the program materials. Include this completed form in the Monthly Compliance Report.

No.	Employee Name	Title/Company	Signature
1.	Alice-FAYE Peugh	Asst. TREASURER Abeinsa EPC	Alice-Faye Peugh
2.	Jaluessa Pacheco	A/P Manager	Jaluessa Pacheco
3.	Francisco Cachu	Asst Controller/Abeinsa EPC	
4.	Bernarda Santana Ramirez	Drafter	
5.	MARIA ELENA LOPEZ	DC / ABEINSA	
6.	Isabel Diez Atienza	DC / ABEINSA	
7.	Tishena Jackson	DC / Abeinsa	
8.	ROBIN E. YAMASAKI	DRAFTER/ABEINSA	
9.	ANTONIO MANZI	PROCUREMENT	
10.	LUIS MIGUEL LOPEZ JIMENEZ	PURCHASING DIRECTOR	
11.	DIEGO M. RODRIGUEZ GLEZ	Engineering Director	
12.	PILAR RODRIGUEZ GONZALEZ	Project Engineer	
13.	Alberto Diaz Alcecer	Elect. Lead Engineer	
14.	ERNESTO MANRIQUEZ	CAD / AG ENGRG	Ern C. Manriquez
15.	HOSSEIN KHORASANI	Mechanical ENG.	
16.	MIKE HELLER	BUYER/ ABEINSA EPC	
17.	Miguel Angel Perez	Expediter/Abeinsa EPC	
18.	Jose Manuel Rodriguez Perez	Buyer/Abeinsa EPC	
19.	VERNON D LEEMING	Permits/ AEPC	
20.	Cassie Rodriguez	~~Abeinsa EPC~~	
21.	Maria Reyes de Castro	Finance/Abeinsa EPC	
22.	Leticia Gaona Martinez	Treasury/Abeinsa EPC	
23.	Elisa Alejandra Perapente	Accounting Controller	
24.	Maria Elena Reyes Rivera	Abeinsa EPC	
25.	Steven Jenkins	Abeinsa EPC	
26.	Magdalena Tejeda	Purchasing	
27.	Brigit Morreal	Purchasing/AEPC	
28.	Daniel Cardenas	Purchasing	
29.	Salvador Gonzalez Ayala	CIVIL AG	
30.	JOAQUIN PIULARCH MORENO	CIVIL AG	
31	GERARDO PAZ RUIZ	CIVIL AG	

Biological Trainer: _____ Signature: _____ Date: __/__/__

Cultural Trainer: MICHAEL CAREY AEPC Signature: _____ Date: 5/9/13

Paleo Trainer: _____ Signature: _____ Date: __/__/__

Bcc - Bernarda Santana Ramirez

Certification of Completion
Worker Environmental Awareness Program
Mojave Solar Project (09-AFC-5)

This is to acknowledge these individuals have completed a mandatory California Energy Commission-approved Worker Environmental Awareness Program (WEAP). The WEAP includes pertinent information on biological, cultural, and paleontological resources for all personnel (that is, construction supervisors, crews, and plant operators) working on site or at related facilities. By signing below, the participant indicates that he/she understands and shall abide by the guidelines set forth in the program materials. Include this completed form in the Monthly Compliance Report.

No.	Employee Name	Title/Company	Signature
1.	Arlene Garcia	Finance Dept / Abeinsa EPC	[signature]
2.	VERONICA ROMERO GAMAZO	Cost Dept / Abeinsa EPC	[signature]
3.	Dominika Nowakowski	M&E Expeditor	D. Nowakowski
4.	ANA Patra-Brantley	Cost Engineer/Abeinsa	[signature]
5.	TATYANA P. BALSHEM	ENGINEER	T. Balshem
6.	ANTONIA BARRIENTOS	AG ENGINEERING	[signature]
7.	RICARDO R. DELGADO	ABEINSA EPC	[signature]
8.	SHEILA LARSEN	RISK/ABEINSA	[signature]
9.	ANTONIO FRÍAS	FINANCE / ABEINSA	[signature]
10.	SAIDA MOUBARIK	COST CONTROL / ABEINSA	[signature]
11.	BEATRIZ CARMONA	PROCESS ENGINEER/AEPC	[signature]
12.	ZACARÍAS CIFUENTES	MECHANICAL ENGINEER/AEPC	[signature]
13.	FRANCISCO LÓPEZ SERRANO	MECHANICAL ENGINEER / AGE	[signature]
14.	JUAN BOSCO HOCHENLEYTER	I&C ENGINEER / AGE	[signature]
15.	IRENE MARTINEZ MARGALLO	Technical manager / AGE	[signature]
16.	CHANDRA KRISHNAMOORTHY	MECHANICAL / AEPC	[signature]
17.	NEHA SINGH	CHEMICAL / AGE	[signature]
18.	JAVIER RIVERA	ELECTRICAL / AEPC	[signature]
19.	ROCÍO GONZÁLEZ-TABLAS DATAS	MECH ENG / AEPC	[signature]
20.	ANGELA MARTÍN ESPINOSA	PIPING ENG / AEPC	[signature]
21.	MARÍA NUÑEZ RODRÍGUEZ	I&C ENGINEER/AEPC	[signature]
22.	Steven Jenkins	Electrical / AEPC	[signature]
23.	Magdalena Tejeda	Purchasing	[signature]
24.	Engie Monreal	Purchasing	[signature]
25.	Daniel Cardenas	Purchasing	[signature]
26.	EDUARDO REYMUNDO	ENG / AEPC	[signature]
27.	Scott Richardt	Process Engineer / AEPC	Scott Richardt
28.	MARIA PICOSSI GONI	Civil Engineer / AG	[signature]
29.	TATYANA BALSHEM	ENGINEER / ABEINSA	T. Balshem
30.	RICARDO R DELGADO	ENGINEER / ABEINSA EPC	[signature]

JESÚS AYUSO ENGINEER / AGE

Biological Trainer: _____ Signature: _____ Date: __/__/__

Cultural Trainer: MICHAEL CAREY Signature: [signature] Date: 5/9/13

Paleo Trainer: _____ Signature: _____ Date: __/__/__

GUILLERMO SÁNCHEZ-AGESTA AGUILERA | MANAGEMENT / AGE

CURTIS COOMBS ENGINEER AGE [signature]

Certification of Completion
Worker Environmental Awareness Program
Mojave Solar Project (09-AFC-5)

This is to acknowledge these individuals have completed a mandatory California Energy Commission-approved Worker Environmental Awareness Program (WEAP). The WEAP includes pertinent information on biological, cultural, and paleontological resources for all personnel (that is, construction supervisors, crews, and plant operators) working on site or at related facilities. By signing below, the participant indicates that he/she understands and shall abide by the guidelines set forth in the program materials. Include this completed form in the Monthly Compliance Report.

No.	Employee Name	Title/Company	Signature
1.	ROBERT KADHAN	LABORER/NMN CONSTR	R. Kadhan
2.	Jeff Shafer	Operator/Brutoco	Jeff Shafer
3.	Jeremy Young	Pipefitter/FHI	Jeremy Young
4.	Joel Ortiz	Laborer/Straight line	
5.	Manuel Lopez	Teamster/Milco	
6.	Jana Marcuse	Operator/Brutoco	Marcuse
7.	JEFFREY OLIVERIA	Carpenter/Cage	
8.	Robert Scott Hannah	FHI Pipefitter/welder	
9.	Larry P. Gibby JR	FHI PF/W	
10.	SEAN BOSSERT	HOTLINE	
11.	ROBERTO CALDERON	CMC REBAR	
12.			
13.			
14.			
15.			
16.			
17.			
18.			
19.			
20.			
21.			
22.			
23.			
24.			
25.			
26.			
27.			
28.			
29.			
30.			

Biological Trainer: _____ Signature: _____ Date: 05/09/13

Cultural Trainer: _____ Signature: _____ Date: __/__/__

Paleo Trainer: _____ Signature: _____ Date: __/__/__

Certification of Completion
Worker Environmental Awareness Program
Mojave Solar Project (09-AFC-5)

This is to acknowledge these individuals have completed a mandatory California Energy Commission-approved Worker Environmental Awareness Program (WEAP). The WEAP includes pertinent information on biological, cultural, and paleontological resources for all personnel (that is, construction supervisors, crews, and plant operators) working on site or at related facilities. By signing below, the participant indicates that he/she understands and shall abide by the guidelines set forth in the program materials. Include this completed form in the Monthly Compliance Report.

No.	Employee Name	Title/Company	Signature
1.	Noe Perez	Millco	
2.	DINO MONTEZ	MILCO	
3.	Robert Garcia	Milco	
4.	Philbert Bigman	Milco	
5.	Tracey Cristal	Milco	
6.	Karmina Torres	SIEESA.	Karina Torres
7.	Greg Glennie	University	
8.	Salvador Pedraza	FHI	
9.	Michael Gomez	Loco	
10.	Barry Davidson	CMC	
11.	Ruben CANAS	BM Milco	
12.	Manuel Rivera	Stering & Inc.	Manuel Rivera
13.	Tony Silva	Hot Line	
14.	MORGAN A. KING	~~#~~ CH2M HILL	
15.	Chris PLACENCIA	University	
16.	BRENT FINLEY	CH2M HILL	Brent Finley
17.	RICK GRAHAM	University	
18.	TOM DOMENICO	MILCO	
19.	Derrick Crank	MILCO	
20.	Jeffrey BARNARD	Hot Line Const Inc	
21.			
22.			
23.			
24.			
25.			
26.			
27.			
28.			
29.			
30.			

Biological Trainer: _____ Signature: _____ Date: 5/10/13

Cultural Trainer: _____ Signature: _____ Date: __/__/__

Paleo Trainer: _____ Signature: _____ Date: __/__/__

Paleontological Specialist

Cara Corsetti PG

Certification of Completion
Worker Environmental Awareness Program
Mojave Solar Project (09-AFC-5)

This is to acknowledge these individuals have completed a mandatory California Energy Commission-approved Worker Environmental Awareness Program (WEAP). The WEAP includes pertinent information on biological, cultural, and paleontological resources for all personnel (that is, construction supervisors, crews, and plant operators) working on site or at related facilities. By signing below, the participant indicates that he/she understands and shall abide by the guidelines set forth in the program materials. Include this completed form in the Monthly Compliance Report.

No.	Employee Name	Title/Company	Signature
1.	TIMOTHY HAMAKER	BIOL. MONITOR/CH2MHILL	Timothy Hamaker
2.	Jasper Yazzie	Milco	Jasper Yazzie
3.	Max Roth	ARB	
4.		ARB	
5.	Haskel Dickeson	Largo	
6.	Fidencio Mayo	Largo	
7.	DWAINE L. CRAIG	MILCO	
8.	BEN ALCOSER	F.E. MORAN	
9.			
10.			
11.			
12.			
13.			
14.			
15.			
16.			
17.			
18.			
19.			
20.			
21.			
22.			
23.			
24.			
25.			
26.			
27.			
28.			
29.			
30.			

Biological Trainer: _____ Signature: _____ Date: 5/13/13

Cultural Trainer: _____ Signature: _____ Date: ___/___/___

Paleo Trainer: _____ Signature: _____ Date: ___/___/___

Certification of Completion
Worker Environmental Awareness Program
Mojave Solar Project (09-AFC-5)

This is to acknowledge these individuals have completed a mandatory California Energy Commission-approved Worker Environmental Awareness Program (WEAP). The WEAP includes pertinent information on biological, cultural, and paleontological resources for all personnel (that is, construction supervisors, crews, and plant operators) working on site or at related facilities. By signing below, the participant indicates that he/she understands and shall abide by the guidelines set forth in the program materials. Include this completed form in the Monthly Compliance Report.

No.	Employee Name	Title/Company	Signature
1.	Tom Little	Milco Const Co	Tom Little
2.	Melissa A Collins-Little	Milco Construction	[illegible]
3.	Jorge Amaya	Straight line Cons	[illegible]
4.	JOHN REYES	STRAIGHTLINE CONS.	John Reyes
5.	Michael Iron Shell	Milco Const	Mike Iron Shell
6.	MICHAEL AAENSON	MILCO	[illegible]
7.	Daniel Mandujano	Milco	Daniel Mandujano
8.	ELEAZAR Aguilar (AL)	MILCO	[illegible]
9.	David D Reed	Straight light	[illegible]
10.	DENNIS NUCKOLLS	STRAIGHTLINE	Dennis Nuckolls
11.	Shawn Holk	Premier	[illegible]
12.	George Cohen	Straightline con	[illegible]
13.	MICHAEL RORKE JR	ABIENSA/Field Sup.	[illegible]
14.	GREG KOENIG	NEXT Century	[illegible]
15.	LES KOENIG	Next Century	[illegible]
16.	NICK RANSOM	Next Century	[illegible]
17.	Carlos V. Hernandez	Mechanical Quality	[illegible]
18.			
19.			
20.			
21.			
22.			
23.			
24.			
25.			
26.			
27.			
28.			
29.			
30.			

Biological Trainer: _____ Signature: _____ Date: 5/14/13

Cultural Trainer: _____ Signature: _____ Date: ___/___/___

Paleo Trainer: _____ Signature: _____ Date: ___/___/___

Certification of Completion
Worker Environmental Awareness Program
Mojave Solar Project (09-AFC-5)

This is to acknowledge these individuals have completed a mandatory California Energy Commission-approved Worker Environmental Awareness Program (WEAP). The WEAP includes pertinent information on biological, cultural, and paleontological resources for all personnel (that is, construction supervisors, crews, and plant operators) working on site or at related facilities. By signing below, the participant indicates that he/she understands and shall abide by the guidelines set forth in the program materials. Include this completed form in the Monthly Compliance Report.

No.	Employee Name	Title/Company	Signature
1.	JUAN Negrete	Pipefitter milco	
2.	CARLOS ESTRADA	CARPENTER / LARGO	
3.	VIEVIN GUY	LINEMAN / HOTLINE	
4.	Steve Diethelm	Wireman / HoHinc	
5.	R.G. MONTES	LABORER / MILCO	
6.	MICHAEL SMITH	GROUNDMAN / HOTLINE	
7.			
8.			
9.			
10.			
11.			
12.			
13.			
14.			
15.			
16.			
17.			
18.			
19.			
20.			
21.			
22.			
23.			
24.			
25.			
26.			
27.			
28.			
29.			
30.			

Biological Trainer: _____ Signature: _____ Date: 5/15/13

Cultural Trainer: _____ Signature: _____ Date: ___/___/___

Paleo Trainer: _____ Signature: _____ Date: ___/___/___

Certification of Completion
Worker Environmental Awareness Program
Mojave Solar Project (09-AFC-5)

This is to acknowledge these individuals have completed a mandatory California Energy Commission-approved Worker Environmental Awareness Program (WEAP). The WEAP includes pertinent information on biological, cultural, and paleontological resources for all personnel (that is, construction supervisors, crews, and plant operators) working on site or at related facilities. By signing below, the participant indicates that he/she understands and shall abide by the guidelines set forth in the program materials. Include this completed form in the Monthly Compliance Report.

No.	Employee Name	Title/Company	Signature
1.	Eric Sumaya	Operator Amec Inc	
2.	Adam Culver	pipefitter/Murray Co.	
3.	Rian Murphy	Vice Pres / Amec Inc	
4.	Joe Marshall	Pipefitter Murray	
5.	David Elser	Operator Amec Inc	
6.	Junior Casas	P/F Murray	
7.	Andres Ramos	Large Concrete Company	
8.	Fred Barker	Journeyman Lineman	
9.	Antonio de la Cruz	BM/L-92	
10.	Elroy Addakai	BM L-004	
11.	Pat Fain	Journeyman Lineman	
12.	James Measurall	Operator/Amec	
13.	Steven Lund	Carpenter/ARB	
14.	Louis Silva	Carpenter/ARB	
15.	Arnold Diaz	Amec-ibe	
16.	Jason Whitecrack	Boilermaker	
17.			
18.			
19.			
20.			
21.			
22.			
23.			
24.			
25.			
26.			
27.			
28.			
29.			
30.			

Biological Trainer: _____ Signature: _____ Date: 5/16/13

Cultural Trainer: _____ Signature: _____ Date: ___/___/___

Paleo Trainer: _____ Signature: _____ Date: ___/___/___

Certification of Completion
Worker Environmental Awareness Program
Mojave Solar Project (09-AFC-5)

This is to acknowledge these individuals have completed a mandatory California Energy Commission-approved Worker Environmental Awareness Program (WEAP). The WEAP includes pertinent information on biological, cultural, and paleontological resources for all personnel (that is, construction supervisors, crews, and plant operators) working on site or at related facilities. By signing below, the participant indicates that he/she understands and shall abide by the guidelines set forth in the program materials. Include this completed form in the Monthly Compliance Report.

No.	Employee Name	Title/Company	Signature
1.	Matthew Lusby	welder/Universal mech	
2.	Justin Vincent	welder	
3.	Darrick Dash	Boilermaker	
4.	Lincoln Tallman	Boilermaker	
5.	JUAN ESTRADA	LABer	
6.	Robert Butner	Ironworker	
7.	Oscar Hernandez	LARGO	Oscar Hernandez
8.	James E. clouse	welder/ FHI	James E clouse
9.	Jorge L. Gonzalez	Iron Worker	
10.	Robert McGINNIS	Filter/ university	
11.	SCOTT GEMBERLING	FITTER UNIVERSITY	
12.	Jason Burton	Fitter/ university	
13.	James Adauto Jr	Fitter/university	
14.	JAVIER COROVA	FITTER/UNIMECH	
15.	Charles STRUCKHOFF	Mechanic Bigge Crane	
16.	James Horlacher	Boilermaker/ Millo	
17.	Felix Vigil	Boilermaker / Millo	
18.			
19.			
20.			
21.			
22.			
23.			
24.			
25.			
26.			
27.			
28.			
29.			
30.			

Biological Trainer: Tim Hamaker Signature: _____ Date: 05/17/13

Cultural Trainer: _____ Signature: _____ Date: ___/___/___

Paleo Trainer: _____ Signature: _____ Date: ___/___/___

Certification of Completion
Worker Environmental Awareness Program
Mojave Solar Project (09-AFC-5)

This is to acknowledge these individuals have completed a mandatory California Energy Commission-approved Worker Environmental Awareness Program (WEAP). The WEAP includes pertinent information on biological, cultural, and paleontological resources for all personnel (that is, construction supervisors, crews, and plant operators) working on site or at related facilities. By signing below, the participant indicates that he/she understands and shall abide by the guidelines set forth in the program materials. Include this completed form in the Monthly Compliance Report.

No.	Employee Name	Title/Company	Signature
1.	George Salloum	ABENGOA EPC	
2.	JARROD DIAMOND	UNIVERSITY MECHANICAL	
3.	MANUEL GONZALEZ	ABENGOA T&D	
4.	RAFAEL PACHECO RAMOS	AG INGENIERIA	
5.	FRANCISCO BUJA GONZALEZ	AG INGENIERIA	
6.	FERNANDA A. GARCIA	High Light Electric	
7.	JESUS E. WALLACE	HIGH LIGHT ELECTRIC	
8.	ERIC J Jones	ARB	
9.	Randy Mende	Sukut Const.	
10.	Jeremy Ogrodnik	Milco	
11.	MIKE ARAGONA	MILCO	
12.	WILLIAM STUMP	TEAM	
13.	JEFF LOOSEWALD	TEAM	
14.			
15.			
16.			
17.			
18.			
19.			
20.			
21.			
22.			
23.			
24.			
25.			
26.			
27.			
28.			
29.			
30.			

Biological Trainer: _____ Signature: _____ Date: 5/21/13

Cultural Trainer: _____ Signature: _____ Date: ___/___/___

Paleo Trainer: _____ Signature: _____ Date: ___/___/___

Certification of Completion
Worker Environmental Awareness Program
Mojave Solar Project (09-AFC-5)

This is to acknowledge these individuals have completed a mandatory California Energy Commission-approved Worker Environmental Awareness Program (WEAP). The WEAP includes pertinent information on biological, cultural, and paleontological resources for all personnel (that is, construction supervisors, crews, and plant operators) working on site or at related facilities. By signing below, the participant indicates that he/she understands and shall abide by the guidelines set forth in the program materials. Include this completed form in the Monthly Compliance Report.

No.	Employee Name	Title/Company	Signature
1.	JOHNNY TORRES	MURRAY CO.	[illegible]
2.	JOEL VALCHU	SPX/FEMORAN	[illegible]
3.	ISAC KUNJACHAN	MURRAY CO	[illegible]
4.	Mike Massey	Carpenter/Hargo	[illegible]
5.	Charles Scarff	United Rentals, Mech	[illegible]
6.	KACEY SYKES	Wekler/Murray	[illegible]
7.	Jonathan Clark	PF Murray	[illegible]
8.	Kim Scheidecker	McMinn/Sukut	[illegible]
9.	Joe Cochrane	Sukut	[illegible]
10.	Doug Clow	SUKUT	[illegible]
11.	Richard Hetherington	Sukut	[illegible]
12.	RALPH CASTILLO	SPX/FEMORAN	[illegible]
13.	RANDALL WYAN	MURRAY	[illegible]
14.			
15.			
16.			
17.			
18.			
19.			
20.			
21.			
22.			
23.			
24.			
25.			
26.			
27.			
28.			
29.			
30.			

Biological Trainer: _____ Signature: _____ Date: 5/20/13

Cultural Trainer: _____ Signature: _____ Date: ___/___/___

Paleo Trainer: _____ Signature: _____ Date: ___/___/___

Certification of Completion
Worker Environmental Awareness Program
Mojave Solar Project (09-AFC-5)

This is to acknowledge these individuals have completed a mandatory California Energy Commission-approved Worker Environmental Awareness Program (WEAP). The WEAP includes pertinent information on biological, cultural, and paleontological resources for all personnel (that is, construction supervisors, crews, and plant operators) working on site or at related facilities. By signing below, the participant indicates that he/she understands and shall abide by the guidelines set forth in the program materials. Include this completed form in the Monthly Compliance Report.

No.	Employee Name	Title/Company	Signature
1.	ERIC HUESCA	PF Milco	
2.	BURT KING	OPP. MILCO	
3.	Lee GAtson	PF milco	
4.	DARRELL MARK	BM MILCO	
5.	Seth Beasley	PF milco	
6.	DAVID Sample	PF milco	
7.	Stenson Begay	BM Milco	
8.	Javier Gonzalez	Bm milco	
9.	Brian HUNTER	PF MILCO	
10.	Jason Ellis	PF Milco	
11.	HOMERO DUEÑAS	BM Milco	
12.	Kevin Walker SR	Bm Milco	
13.	Kaitlyn Smallcanyon	Bm Milco	
14.	JAMES WADE	P.M./UNIQUE	
15.	MATT TUTTLE	JW/HotLine Const.	
16.	Gary Luker	PF milco	
17.	MARCO ACENTORIA	PF/WELDER-MURRAY	
18.	LUIS MIGUEL MORATO	AM/ABEINSA EPC	
19.	BeLTran Lopez	METRO Guard	
20.	Ryan Hancock	PF/WELDER/Murray	
21.	Chris Mitchell	PF/welder/murray	
22.	ROBERT J DAVIS	PF AEB	
23.			
24.			
25.			
26.			
27.			
28.			
29.			
30.			

Biological Trainer: _____ Signature: _____ Date: 5/22/13

Cultural Trainer: _____ Signature: _____ Date: ___/___/___

Paleo Trainer: _____ Signature: _____ Date: ___/___/___

Certification of Completion
Worker Environmental Awareness Program
Mojave Solar Project (09-AFC-5)

This is to acknowledge these individuals have completed a mandatory California Energy Commission-approved Worker Environmental Awareness Program (WEAP). The WEAP includes pertinent information on biological, cultural, and paleontological resources for all personnel (that is, construction supervisors, crews, and plant operators) working on site or at related facilities. By signing below, the participant indicates that he/she understands and shall abide by the guidelines set forth in the program materials. Include this completed form in the Monthly Compliance Report.

No.	Employee Name	Title/Company	Signature
1.	Eric Bush	crane operator/milco	
2.	Kenneth C. Bleck	Crane operator Bigge Crane	Kenneth C. Bleck
3.	Josh Stone	Pipefitter/Murray	
4.	Michael Cozeno	Labor/milco	
5.	David Watkins	Milco construction	David Watkins
6.	ENRIQUE ORTIZ SR	MILCO CONSTRUCTORS	
7.	MIKE WAITE	ELECTRICIAN/HIGHLIGHT	
8.	Jesse V Romero	ELECT/HighLight	Jesse V Romero
9.	Constantino O. Carbajal	UMEC/Pipefitter	
10.	Felix Fantasia	UMEC/welder	
11.	ROYCE CAMP	U.MECH/welder	
12.	Anthony Hankins	UMEC welder	Anthony J Hankins
13.	Camilo Gaona	UMEC Welder	Camilo Gaona
14.	Robert Hernandez	Murray Company	
15.	David Hayos	UMEC/PF	
16.	TREVOR EMRAY	UMEC/PF	
17.			
18.			
19.			
20.			
21.			
22.			
23.			
24.			
25.			
26.			
27.			
28.			
29.			
30.			

Biological Trainer: _____ Signature: _____ Date: 5/23/13

Cultural Trainer: _____ Signature: _____ Date: ___/___/___

Paleo Trainer: _____ Signature: _____ Date: ___/___/___

Certification of Completion
Worker Environmental Awareness Program
Mojave Solar Project (09-AFC-5)

This is to acknowledge these individuals have completed a mandatory California Energy Commission-approved Worker Environmental Awareness Program (WEAP). The WEAP includes pertinent information on biological, cultural, and paleontological resources for all personnel (that is, construction supervisors, crews, and plant operators) working on site or at related facilities. By signing below, the participant indicates that he/she understands and shall abide by the guidelines set forth in the program materials. Include this completed form in the Monthly Compliance Report.

No.	Employee Name	Title/Company	Signature
1.	Joe G Aguirre	MILCO	
2.	Don Marshall	MILCO	
3.	HENRY VALENCIA	MILCO	
4.	GABRIEL CORTEZ	MILCO	
5.	Shaun Verge	MILCO	
6.	Clinton P. Kingston Jr	Milco	
7.	Steven Brierty	OIT	
8.	Larry Powell	Milco	
9.	John Clark	Milco	
10.	John K. Blevins	Milco	
11.	MARCOS CABRERA	Metroguard	
12.	Daniel Martinez	Milco	
13.	Adrian Salas	MILCO	
14.	KEITH SHIRLEY	MILCO	
15.	CRAIG CORNEAL	MILCO	
16.	Lawrence Calderon	MILCO	
17.	GERRY JOHNSON	MILCO	
18.	RAIVO NEAGO	BUREAU VERITAS	
19.	JOSEPH LENTE	MONITOR / OIT	
20.	Leina Gilum	NAM / OIT	
21.	Steven Tacheco	Monitor / OIT	
22.			
23.			
24.			
25.			
26.			
27.			
28.			
29.			
30.			

Biological Trainer: _____ Signature: _____ Date: 5/24/13

Cultural Trainer: _____ Signature: _____ Date: ___/___/___

Paleo Trainer: _____ Signature: _____ Date: ___/___/___

Certification of Completion
Worker Environmental Awareness Program
Mojave Solar Project (09-AFC-5)

This is to acknowledge these individuals have completed a mandatory California Energy Commission-approved Worker Environmental Awareness Program (WEAP). The WEAP includes pertinent information on biological, cultural, and paleontological resources for all personnel (that is, construction supervisors, crews, and plant operators) working on site or at related facilities. By signing below, the participant indicates that he/she understands and shall abide by the guidelines set forth in the program materials. Include this completed form in the Monthly Compliance Report.

No.	Employee Name	Title/Company	Signature
1.	Timothy P Garcia	P.F. Milco	Timothy P Garcia
2.	JAMES W MUNRO	PF. MILCO	James W Munro
3.	DANIEL E WILLIAMS	P.F. MILCO	
4.	ANTHONY PAUL	P.F. MILCO	Anthony Paul
5.	John McCarty	operator / university	
6.	Eduardo Alvarez	pf / U.mack	
7.	Anthony Abreo	PF - University	
8.	EDUARDO O. REYES	H&S-CT - INSPECTOR	E.O. Reyes
9.	JONATHAN BOBADILLA	METRO GUARD	
10.	Jonathan Cordova	Metro Guard	
11.	Nathan Romo	P.F. Milco	
12.	Edwin Mendoza	PF Milco	
13.	DANIEL RICHARDS	P/F MILCO	
14.	AUSTIN PECK	P/F MILCO	
15.	GARY NEGALE	P/F Milco	
16.	CHAD COREY	RSH	
17.	RICHARD BRAVILEY	AITC	
18.	Richard Hille	PF Milco	
19.	JAMES WATHAWAY	PF UNIVERSITY	
20.	PAUL VACDER	P.F. Milco	
21.	DENNIS NARAINE	PF Milco	
22.	Michelle Self	PC/UMEC	
23.	Dustin Rodriguez	P.F. UMEC	
24.	Timothy Francis	PF Milco	
25.	Laird Craig	Ironworker / Brutico Andreo	
26.	Chris Sellers	CM / Milco	
27.	Mike Worley	Milco	
28.	Gustavo Hernandez	LARGO	
29.	Rafael Sanchez	LARGO	
30.	Daniel Ruiz	Milco	

Biological Trainer: _____ Signature: _____ Date: 5/28/13

Cultural Trainer: _____ Signature: _____ Date: __/__/__

Paleo Trainer: _____ Signature: _____ Date: __/__/__

ADRIAN HUMANES SLEESA

Edgar Zavala SEL

Hector Salado SEL

Jon Tortoro University Mech.

Jose Cruz MILCO

Rogelio Mejia Pipelayer/Sukut Rogelio Mejia

Jorge Lopez Laborer, SUKUT Jorge Lopez

ART GUZMAN P/F MILCO

ANTHONY PAUL

GERALD NASH OMEC

Certification of Completion
Worker Environmental Awareness Program
Mojave Solar Project (09-AFC-5)

This is to acknowledge these individuals have completed a mandatory California Energy Commission-approved Worker Environmental Awareness Program (WEAP). The WEAP includes pertinent information on biological, cultural, and paleontological resources for all personnel (that is, construction supervisors, crews, and plant operators) working on site or at related facilities. By signing below, the participant indicates that he/she understands and shall abide by the guidelines set forth in the program materials. Include this completed form in the Monthly Compliance Report.

No.	Employee Name	Title/Company	Signature
1.	ANDRES R PEREZ	ABEINSA EPC	
2.	AURORA MARTIN	ABEINSA EPC	
3.	Todd Reeves	Amec inc	
4.	Lattie Jones	Abeinsa EPC	
5.	[illegible]	milco	
6.	WINSTON Rocke	MILCO	
7.	GARY MADONNA	MILCO	
8.	Jim TIZZANO	milco	
9.	Ronald B Barton	Milco	
10.	Vanessa Bonerty	OTT / CH2MHILL	
11.	Chris Waller	CH2M HILL / Aaron-D	
12.	James R Burdge	Milco	
13.	Jason Nuckolls	milco / welder	
14.			
15.			
16.			
17.			
18.			
19.			
20.			
21.			
22.			
23.			
24.			
25.			
26.			
27.			
28.			
29.			
30.			

Biological Trainer: _____ Signature: _____ Date: 5/29/13

Cultural Trainer: _____ Signature: _____ Date: ___/___/___

Paleo Trainer: _____ Signature: _____ Date: ___/___/___

Certification of Completion
Worker Environmental Awareness Program
Mojave Solar Project (09-AFC-5)

This is to acknowledge these individuals have completed a mandatory California Energy Commission-approved Worker Environmental Awareness Program (WEAP). The WEAP includes pertinent information on biological, cultural, and paleontological resources for all personnel (that is, construction supervisors, crews, and plant operators) working on site or at related facilities. By signing below, the participant indicates that he/she understands and shall abide by the guidelines set forth in the program materials. Include this completed form in the Monthly Compliance Report.

No.	Employee Name	Title/Company	Signature
1.	James Rudsell	Mesa	
2.	Brenda Marley	Milco	Brenda Marley
3.	Tim Rhoades	MILCO	Tim Rhoades
4.	Wayne Thompson	SWCA	
5.	Joaquin Carmona Robles	AG INGENIERIA	
6.	Luis Sanchez Cadezo	AG ENGINEERING	
7.	SARA AGUIRRETA	AG ENGINEERING	
8.	MANUEL J. PEREZ GARCIA	AG ENGINEERING	
9.	BRENT L. JORDAN	FHI	
10.	Frank Cambio	Milco	
11.	Edwin chavez	Milco	Edwin chavez
12.	Fernando Sanchez Corral	Penhall Corp	
13.	Federico Garcia	Penhall Comp.	
14.	Don Presley	Operator	
15.	John Ransdell	FHI	
16.	WALT Middleton	PFW / Milco	Walt Middleton
17.	Patrick M. O'Neil Sr.	PFW / FHI	Patrick M. O'Neil Sr.
18.			
19.			
20.			
21.			
22.			
23.			
24.			
25.			
26.			
27.			
28.			
29.			
30.			

Biological Trainer: _____ Signature: _____ Date: 5/30/13

Cultural Trainer: _____ Signature: _____ Date: ___/___/___

Paleo Trainer: _____ Signature: _____ Date: ___/___/___

Certification of Completion
Worker Environmental Awareness Program
Mojave Solar Project (09-AFC-5)

This is to acknowledge these individuals have completed a mandatory California Energy Commission-approved Worker Environmental Awareness Program (WEAP). The WEAP includes pertinent information on biological, cultural, and paleontological resources for all personnel (that is, construction supervisors, crews, and plant operators) working on site or at related facilities. By signing below, the participant indicates that he/she understands and shall abide by the guidelines set forth in the program materials. Include this completed form in the Monthly Compliance Report.

No.	Employee Name	Title/Company	Signature
1.	ALBERTO R. CORONA	MILCO	
2.	JEFF Williams	west coast	
3.	Robert Heredia	Ambar steel	
4.	Leticia Mo Rodriguez	LARGO	
5.	Steven Squarridge	Welder / university	
6.	Gerald Upright	Welder / University	
7.	CHAN HIERS	UMEC	
8.	William Nimmo	umec	
9.	Pablo A. amaya	SUKUT	
10.	TRAVIS BRADY	MILCO	
11.	Jonn Post	milco	
12.	Blanca Valdez	MILCO	
13.	Ray Litteman	Milco	
14.	Dorian Durazo	milco	
15.	Nathaniel Begay	Milco	
16.	Samuel Miller (Retrain)	Milco / #52.	
17.			
18.			
19.			
20.			
21.			
22.			
23.			
24.			
25.			
26.			
27.			
28.			
29.			
30.			

Biological Trainer: _____ Signature: _____ Date: 5/31/13

Cultural Trainer: _____ Signature: _____ Date: ___/___/___

Paleo Trainer: _____ Signature: _____ Date: ___/___/___

Attachment 3
Monthly Common Raven Monitoring Results

Monthly Common Raven Monitoring Results for Abengoa Mojave Solar Project San Bernardino County, California

Monthly Compliance Report
May 2014

Prepared by:

2485 Natomas Park Drive
Sacramento, California 95833

June 2014

Table of Contents

Section **Page**

1.0 Introduction 1

2.0 Construction Monitoring Activities 1

3.0 Methods 1

4.0 Results 2
- Incidental Observations 2
- Point Count Surveys 4
- Nest Monitoring 5

List of Tables

Tables **Page**

1 Incidental Raven Observations 3

2 Summary of Common Raven Point Count Observations 5

List of Supplements

1 Common Raven Point Count Stations

2 Incidental Common Raven Observations

3 Point Count Data Sheets

1.0 Introduction

The Abengoa Mojave Solar Project (MSP) is required to provide a monthly report on common ravens (*Corvus corax*) to the California Energy Commission (CEC), United States Fish and Wildlife Service (USFWS), and California Department of Fish and Wildlife (CDFW). The CEC Final Decision includes Condition of Certification (COC) BIO-18 stating that the project owner shall implement control measures to manage its construction site and related facilities in a manner to control raven populations and to mitigate cumulative and indirect impacts to desert tortoise associated with regional increase in raven numbers. In accordance with BIO-18, the CEC approved the Common Raven Monitoring, Management, and Control Plan (Raven Plan) on March 26, 2012. Refer to BIO-18 and the Raven Plan for monitoring and survey protocol description.

2.0 Construction Monitoring Activities

The following section summarizes biological monitoring activities conducted by CH2M HILL throughout May 2014.

On a typical weekday, one biological monitor or designated biologist:

- Monitors Harper Dry Lake Road at least every 3 hours during the desert tortoise active period (April through May). Due to desert tortoise observations on Harper Lake Road, biological staff monitored the road more often than every 3 hours during the cool morning and afternoon to evenings;
- Monitors active construction areas, parking lots, laydown yards, and any areas of potential threat to vegetation, soils, or wildlife;
- Inspects desert tortoise exclusion fences and tortoise guards as required;
- Inspects potential entrapment areas, e.g., trenches;
- Monitors for formation of potential standing water;
- Inspects kit fox exclusion buffers and downloads motion-sensor cameras at shelter sites;
- Conducts raven observations and bi-weekly point counts;
- Conducts bi-weekly breeding season raven nest search surveys (March through June);
- Reports hazardous waste spills to the designated biologist;
- Inspects pipes greater than 3 inches in diameter that are less than 8 inches above the ground surface; and
- Performs other special biological activities as required.

3.0 Methods

The designated biologist ensures that the biological monitors are trained to implement the Raven Plan in both raven monitoring and management measures. Biological staff also conduct 10-minute stationary point count surveys at seven locations (Supplement 1). The purpose of the point counts is to record raven observations including date, time, location,

number of individuals, age, behavior, distance from the station location, and any other pertinent notes (e.g., nesting behavior). This information is recorded on a hard copy datasheet. Point count surveys are conducted with a minimum of 1 week in between.

Point count surveys were positioned to monitor project-specific activities and features that have potential to attract or subsidize ravens. The Raven Plan defines six "conditions of concern" as:

1. Availability of water from evaporation ponds;
2. Potential creation of new perching/roosting/nesting sites for ravens;
3. Temporary water ponding potential from dust suppression associated with construction, operation, and maintenance;
4. Raven food sources from soil disturbance (rodents, insects, etc.) and road kill associated with construction activity;
5. Human food and waste management; and
6. Landscaping that could provide foraging, perching, and available water opportunities.

During daily monitoring activities, biological staff records incidental observations of ravens interacting with MSP. This includes any raven observation within site boundaries, flying overhead, or adjacent to the site. These observations are recorded in field notebooks and include date, general site location, global positioning system (GPS) location, number of individuals, and activity. The GPS information is also presented on a map.

The incidental observations are also used to identify potential problem areas. Problem areas are those requiring management actions. If a problem area is identified, the surveys will be increased to a weekly basis until the issue is resolved. Habitual perching sites will be identified and actions taken to discourage use. If hazing techniques are employed to discourage raven use, biologists will record information on date, time, location, habitat, number of individuals, and response to hazing. Potential or active raven nests will be documented and removed according to Raven Plan specifications. Biological staff will report on whether control measures are working and provide further recommendations in the biological monthly compliance report.

4.0 Results

Incidental Observations

In May, ravens were observed foraging on food waste in the power block and parking areas, and were also observed drinking from pooled water underneath water refueling stations. Construction staff were notified of these problem areas and biological staff continue to monitor the situation.

During biological monitoring, 72 ravens were incidentally observed during 46 separate observations (Table 1). Because ravens are indistinguishable from one another, multiple sightings of individual birds likely occur. Therefore, the number of observations does not reflect the number of individual birds onsite. Common ravens were observed throughout the site (Supplement 2). The most common raven behavior observed was flying overhead. Many ravens were observed around the Beta evaporation ponds, access roads and power

block, as well as the Alpha West staging area. Due to biologists staffing the kit fox exclusion buffer in Alpha West, a disproportionately high number of ravens was observed flying overhead in Alpha West. This area is not considered a problem area. Ravens were also observed perched on fences and various transmission line poles, but were not using a habitual perch location.

Table 1
May 2014 Incidental Raven Observations

Date	Location	Number Observed	Activity
5/1/14	Beta West	3	Flying
5/2/14	Beta West	2	Flying
5/4/14	Alpha East	1	Flying
5/4/14	Beta East	1	Flying
5/6/14	Beta West	1	Flying
5/6/14	Beta East	1	Flying
5/6/14	Alpha West	2	Flying
5/7/14	Alpha West	1	Feeding
5/7/14	Alpha East	1	Flying
5/8/14	Beta West	1	Drinking
5/9/14	Beta West	1	Flying
5/9/14	Beta East	1	Perched
5/9/14	Alpha East	2	Perched
5/9/14	Alpha West	2	Flying
5/10/14	Alpha East	1	Perched
5/7/14	Alpha West	2	Flying
5/7/14	Beta East	1	Perched
5/9/14	Alpha West	2	Flying
5/9/14	Alpha West	1	Flying
5/13/14	Alpha West	1	Flying
5/13/14	Alpha West	1	Perched
5/14/14	Beta East	4	Perched
5/15/14	Alpha West	1	Flying
5/16/14	Alpha West	1	Flying

Table 1 May 2014 Incidental Raven Observations			
Date	**Location**	**Number Observed**	**Activity**
5/16/14	Alpha West	1	Foraging
5/17/14	Alpha West	2	Flying
5/18/14	Alpha West	2	Flying
5/18/14	Alpha East	1	Feeding
5/19/14	Beta West	1	Flying
5/19/14	Alpha East	2	Flying
5/19/14	Alpha East	1	Flying
5/20/14	Alpha East	2	Flying
5/21/14	Alpha West	2	Flying
5/21/14	Beta East	3	Flying
5/21/14	Beta West	1	Flying
5/21/14	Beta West	3	Flying
5/22/14	Alpha West	2	Flying
5/22/14	Alpha West	2	Flying
5/22/14	Alpha West	1	Flying
5/22/14	Beta East	3	Flying
5/23/14	Alpha West	2	Flying
5/23/14	Alpha West	1	Flying
5/24/14	Alpha East	1	Flying
5/25/14	Alpha West	1	Flying
5/28/14	Beta East	2	Drinking
5/31/14	Alpha West	1	Walking
Total Observations		72	

Point Count Surveys

In May, two biweekly point count surveys were conducted in accordance with the Raven Plan protocol. Point count surveys were conducted on May 8 and May 29, 2014. On May 8, three ravens were observed at Station 5 and one at Station 6. On May 29, one raven was observed at Station 7. Point count observations did not document any nesting

behavior or problem areas. The Common Raven Fixed Point Observation Data Sheets are provided in Supplement 3.

Table 2 provides a summary of point count observations.

Table 2
Summary of Common Raven Point Count Observations

Date: Time	Station	Number of Ravens Observed	Location Description	Activity Observed
5/8/2014: 12:04	#5	1	Beta West	Flying
5/8/2014: 12:06	#5	1	Beta West	Flying
5/8/2014: 12:07	#5	1	Beta West	Flying
5/8/2014: 12:22	#6	1	Beta East	Perched
Total Observed 5/8/14		4		
5/29/2014: 11:27	#7	1	Beta East	Perched
Total Observed 5/29/2014		**1**		

Nest Monitoring

In accordance with the Raven Plan, biweekly breeding season raven nest surveys were conducted in May. No raven nests were identified onsite.

Monthly Common Raven Monitoring Results
May 2014

Supplement 1—Common Raven Point Count Stations

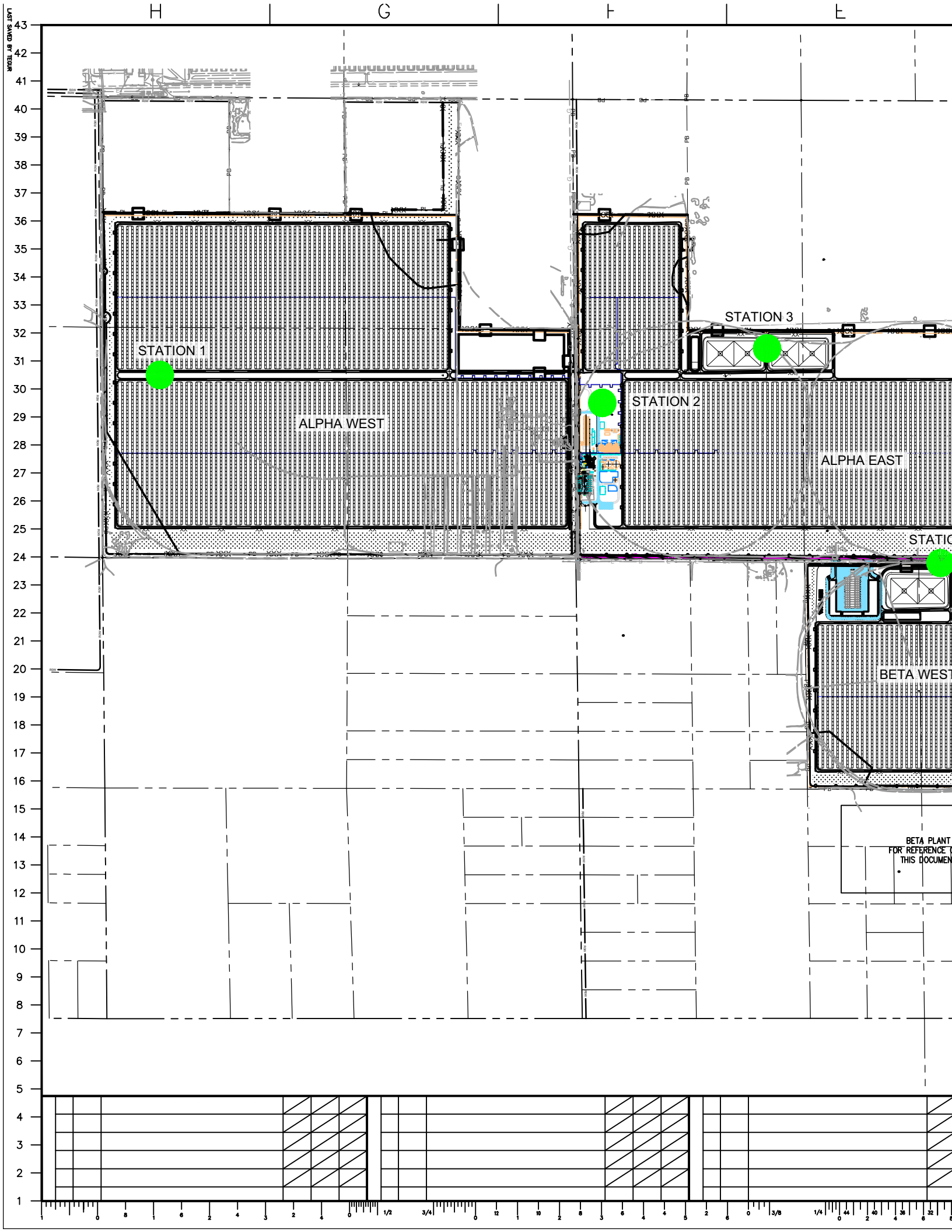
H
G
F
E
STATION 1
STATION 2
STATION 3
ALPHA WEST
ALPHA EAST
BETA WEST
BETA PLANT
FOR REFERENCE
THIS DOCUMEN

Monthly Common Raven Monitoring Results
May 2014

Supplement 2—Incidental Common Raven Observations

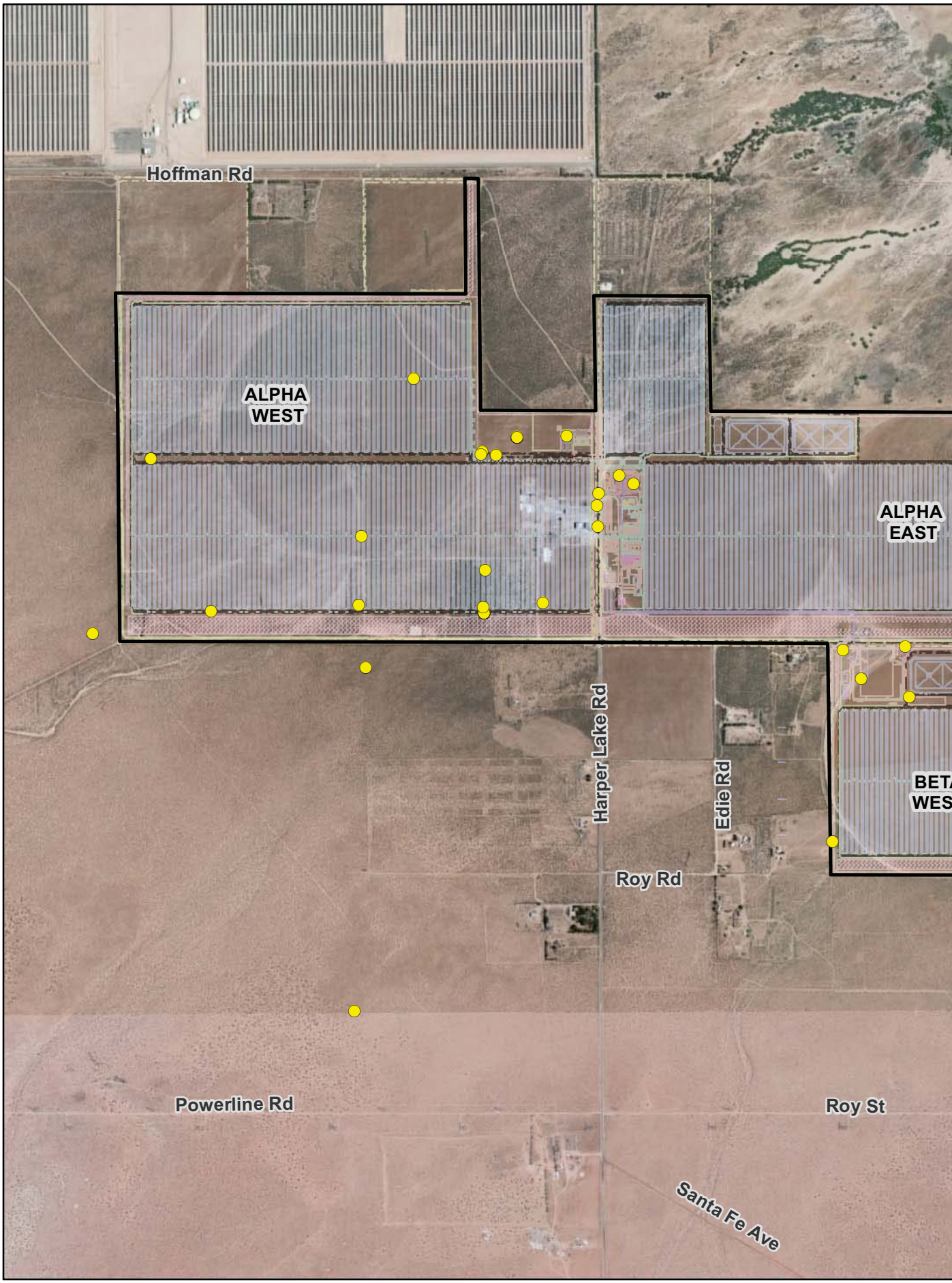

SAC \\ZION\SACGIS\PROJ\SOLARPROJECTS\AGENGOA_MOJAVE_SOLAR\MAPFILES\AMSP_COMPLIANCEREPORT\2014_MONTHLYREPORT\SUPPLEMENT 2_RAVENOBSERVATIONS_

Monthly Common Raven Monitoring Results
May 2014

Supplement 3—Point Count Data Sheets

Mojave Solar

Common Raven Fixed Point Observation Data Sheet

Date (mmddyy) 5/8/14 Observer (init.) SRV Start Time 1052 End Time 1102 Obs Pt. 1

Page 1 of 7

Visibility: (Clear) or Min ____ Max ____ (m)

Wind Direction from (circle one): Calm N NE E SE S (SW) W NW Variable Speed: (Low) High ____ (km/h)

Precipitation (circle one): (none) light rain rain snow sleet hail fog other Temp: 70 (°F) Cloud Cover: 5 %

Obs #	Time	Sex	Age	# of birds	Activity (circle 1st, X others)	Flight Dir (to)	Horizontal Distance (m) 1st	Horizontal Distance (m) closest	Habitat Type/ Perch Structure	Aud?	Vis?	Notes
1					WA PE FL OT							
2					WA PE FL OT							NONE OBSERVED
3					WA PE FL OT							
4					WA PE FL OT							
5					WA PE FL OT							
6					WA PE FL OT							
7					WA PE FL OT							
8					WA PE FL OT							
9					WA PE FL OT							
10					WA PE FL OT							
11					WA PE FL OT							
12					WA PE FL OT							

Activity Codes: WA-walking on ground, PE-perched above ground, FL-flying, OT-other (please specify)

Habitat Codes: CBS-Creosote Bush Scrub, SD/SS-Sand Dunes/Sand Sheets, DP-Desert Pavement, OT-other (please specify, provide details of Project structure/facility)

OBS. # (Time)	ADDITIONAL NOTES

Mojave Solar

Common Raven Fixed Point Observation Data Sheet

Date (mmddyy) 5/8/14 Observer (init.) SKV Start Time 1110 End Time 1120 Obs Pt. (2)

Page 2 of 7

Visibility: Clear or Min _____ Max _____ (m)

Wind Direction from (circle one): Calm N NE E SE S (SW) W NW Variable Speed: (Low) High ____ (km/h)

Precipitation (circle one): (none) light rain rain snow sleet hail fog other Temp: 70 (°F) Cloud Cover: 5 %

Obs #	Time	Sex	Age	# of birds	Activity (circle 1st, X others)		Flight Dir (to)	Horizontal Distance (m) 1st	Horizontal Distance (m) closest	Habitat Type/ Perch Structure	Aud?	Vis?	Notes
1					WA	PE							NONE OBSERVED
					FL	OT							
2					WA	PE							
					FL	OT							
3					WA	PE							
					FL	OT							
4					WA	PE							
					FL	OT							
5					WA	PE							
					FL	OT							
6					WA	PE							
					FL	OT							
7					WA	PE							
					FL	OT							
8					WA	PE							
					FL	OT							
9					WA	PE							
					FL	OT							
10					WA	PE							
					FL	OT							
11					WA	PE							
					FL	OT							
12					WA	PE							
					FL	OT							

Activity Codes: WA-walking on ground, PE-perched above ground, FL-flying, OT-other (please specify)
Habitat Codes: CBS-Creosote Bush Scrub, SD/SS-Sand Dunes/Sand Sheets, DP-Desert Pavement, OT-other (please specify, provide details of Project structure/facility)

OBS. # (Time)	ADDITIONAL NOTES

Mojave Solar

Common Raven Fixed Point Observation Data Sheet

Date (mmddyy) 5/8/14 Observer (init.) SRV Start Time 1122 End Time 1132 Obs Pt. (3)

Page 3 of 7

Visibility: (Clear) or Min _____ Max _____ (m)

Wind Direction from (circle one): Calm N NE E SE S (SW) W NW Variable | Speed: (Low) High ____ (km/h)

Precipitation (circle one): (none) light rain rain snow sleet hail fog other | Temp: 70 (°F) | Cloud Cover: 5 %

Obs #	Time	Sex	Age	# of birds	Activity (circle 1st, X others)	Flight Dir (to)	Horizontal Distance (m) 1st	Horizontal Distance (m) closest	Habitat Type/ Perch Structure	Auc?	Vis?	Notes
1					WA PE FL OT							
2					WA PE FL OT							NONE OBSERVED
3					WA PE FL OT							
4					WA PE FL OT							
5					WA PE FL OT							
6					WA PE FL OT							
7					WA PE FL OT							
8					WA PE FL OT							
9					WA PE FL OT							
10					WA PE FL OT							
11					WA PE FL OT							
12					WA PE FL OT							

Activity Codes: WA-walking on ground, PE-perched above ground, FL-flying, OT-other (please specify)
Habitat Codes: CBS-Creosote Bush Scrub, SD/SS-Sand Dunes/Sand Sheets, DP-Desert Pavement, OT-other (please specify, provide details of Project structure/facility)

OBS. # (Time)	ADDITIONAL NOTES

Mojave Solar

Common Raven Fixed Point Observation Data Sheet

Date (mmddyy) 5/8/14 Observer (init.) SRV Start Time 1138 End Time 1148 Obs Pt. (4)

Page 4 of 7

Visibility: Clear or Min _____ Max _____ (m)

Wind Direction from (circle one): Calm N NE E SE S (SW) W NW Variable Speed: (Low) High ____ (km/h)

Precipitation (circle one): (none) light rain rain snow sleet hail fog other Temp: 70 (°F) Cloud Cover: 5 %

Obs #	Time	Sex	Age	# of birds	Activity (circle 1st, X others)	Flight Dir (to)	Horizontal Distance (m) 1st	Horizontal Distance (m) closest	Habitat Type/ Perch Structure	Auc?	Vis?	Notes
1					WA PE FL OT							NONE OBSERVED
2					WA PE FL OT							
3					WA PE FL OT							
4					WA PE FL OT							
5					WA PE FL OT							
6					WA PE FL OT							
7					WA PE FL OT							
8					WA PE FL OT							
9					WA PE FL OT							
10					WA PE FL OT							
11					WA PE FL OT							
12					WA PE FL OT							

Activity Codes: WA-walking on ground, PE-perched above ground, FL-flying, OT-other (please specify)

Habitat Codes: CBS-Creosote Bush Scrub, SD/SS-Sand Dunes/Sand Sheets, DP-Desert Pavement, OT-other (please specify, provide details of Project structure/facility)

OBS. # (Time)	ADDITIONAL NOTES

Mojave Solar

Common Raven Fixed Point Observation Data Sheet

Date (mmddyy) 5/8/14 Observer (init.) JBV Start Time 1203 End Time 1213 Obs Pt. (5)

Page 5 of 7

Visibility: (Clear) or Min. ____ Max ____ (m)

Wind Direction from (circle one): Calm N NE E SE S (SW) W NW Variable Speed: (Low) High ____ (km/h)

Precipitation (circle one): (none) light rain rain snow sleet hail fog other Temp: 70 (°F) Cloud Cover: 5 %

Obs #	Time	Sex	Age	# of birds	Activity (circle 1st, X others)		Flight Dir (to)	Horizontal Distance (m) 1st	Horizontal Distance (m) closest	Habitat Type/ Perch Structure	Aud?	Vis?	Notes
1	1204	-	A	1	WA	PE	S	200	200	SITE	N	Y	
					(FD)	OT							
2	1206	-	A	1	WA	PE	S	50	50	SITE	N	Y	
					(FD)	OT							
3	1207	-	A	1	WA	PE	S	300	300	SITE	N	Y	
					(FD)	OT							
4					WA	PE							
					FL	OT							
5					WA	PE							
					FL	OT							
6					WA	PE							
					FL	OT							
7					WA	PE							
					FL	OT							
8					WA	PE							
					FL	OT							
9					WA	PE							
					FL	OT							
10					WA	PE							
					FL	OT							
11					WA	PE							
					FL	OT							
12					WA	PE							
					FL	OT							

Activity Codes: WA-walking on ground, PE-perched above ground, FL-flying, OT-other (please specify)

Habitat Codes: CBS-Creosote Bush Scrub, SD/SS-Sand Dunes/Sand Sheets, DP-Desert Pavement, OT-other (please specify, provide details of Project structure/facility)

OBS. # (Time)	ADDITIONAL NOTES

Mojave Solar

Common Raven Fixed Point Observation Data Sheet

Date (mmddyy) 5/8/14 Observer (init.) JRV Start Time 1222 End Time 1232 Obs Pt. 6

Page 6 of 7

Visibility: Clear or Min _____ Max _____ (m)

Wind Direction from (circle one): Calm N NE E SE S SW W NW Variable Speed: Low High ____ (km/h)

Precipitation (circle one): none light rain rain snow sleet hail fog other Temp: 70 (°F) Cloud Cover: 5 %

Obs #	Time	Sex	Age	# of birds	Activity (circle 1st, X others)	Flight Dir (to)	Horizontal Distance (m) 1st	Horizontal Distance (m) closest	Habitat Type/ Perch Structure	Aud?	Vis?	Notes
1	1222	-	A	1	WA (PE) / FL OT	-	50	50	SITE / ELEC. POLE	Y	Y	
2					WA PE / FL OT							
3					WA PE / FL OT							
4					WA PE / FL OT							
5					WA PE / FL OT							
6					WA PE / FL OT							
7					WA PE / FL OT							
8					WA PE / FL OT							
9					WA PE / FL OT							
10					WA PE / FL OT							
11					WA PE / FL OT							
12					WA PE / FL OT							

Activity Codes: WA-walking on ground, PE-perched above ground, FL-flying, OT-other (please specify)
Habitat Codes: CBS-Creosote Bush Scrub, SD/SS-Sand Dunes/Sand Sheets, DP-Desert Pavement, OT-other (please specify, provide details of Project structure/facility)

OBS. # (Time)	ADDITIONAL NOTES

Mojave Solar

Common Raven Fixed Point Observation Data Sheet

Date (mmddyy) 5/8/14 Observer (init.) SRV Start Time 1236 End Time 1246 Obs Pt. (7)

Page 7 of 7

Visibility: (Clear) or Min ____ Max ____ (m)

Wind Direction from (circle one): Calm N NE E SE S (SW) W NW Variable Speed: (Low) ____ High ____ (km/h)

Precipitation (circle one): (none) light rain rain snow sleet hail fog other Temp: 70 (°F) Cloud Cover: 5 %

Obs #	Time	Sex	Age	# of birds	Activity (circle 1st, X others)	Flight Dir (to)	Horizontal Distance (m) 1st	Horizontal Distance (m) closest	Habitat Type/ Perch Structure	Aud?	Vis?	Notes
1					WA PE FL OT							
2					WA PE FL OT							
3					WA PE FL OT							
4					WA PE FL OT							
5					WA PE FL OT							
6					WA PE FL OT							
7					WA PE FL OT							
8					WA PE FL OT							
9					WA PE FL OT							
10					WA PE FL OT							
11					WA PE FL OT							
12					WA PE FL OT							

NONE OBSERVED

Activity Codes: WA-walking on ground, PE-perched above ground, FL-flying, OT-other (please specify)

Habitat Codes: CBS-Creosote Bush Scrub, SD/SS-Sand Dunes/Sand Sheets, DP-Desert Pavement, OT-other (please specify, provide details of Project structure/facility)

OBS. # (Time)	ADDITIONAL NOTES

Mojave Solar

Common Raven Fixed Point Observation Data Sheet

Date (mmddyy) 5/29/14 Observer (init.) JRV Start Time 0955 End Time 1005 Obs Pt. (1)

Page 1 of 7

Visibility: (Clear) or Min _____ Max _____ (m)

Wind Direction from (circle one): Calm N NE E SE S (SW) W NW Variable Speed: (Low) High ____ (km/h)

Precipitation (circle one): (none) light rain rain snow sleet hail fog other Temp: [illegible] (F) Cloud Cover: 0 %

Obs #	Time	Sex	Age	# of birds	Activity (circle 1st, X others)	Flight Dir (to)	Horizontal Distance (m) 1st	Horizontal Distance (m) closest	Habitat Type/ Perch Structure	Aud?	Vis?	Notes
1					WA PE FL OT							
2					WA PE FL OT							
3					WA PE FL OT							
4					WA PE FL OT							
5					WA PE FL OT							
6					WA PE FL OT							
7					WA PE FL OT							
8					WA PE FL OT							
9					WA PE FL OT							
10					WA PE FL OT							
11					WA PE FL OT							
12					WA PE FL OT							

NONE OBSERVED

Activity Codes: WA-walking on ground, PE-perched above ground, FL-flying, OT-other (please specify)

Habitat Codes: CBS-Creosote Bush Scrub, SD/SS-Sand Dunes/Sand Sheets, DP-Desert Pavement, OT-other (please specify, provide details of Project structure/facility)

OBS. # (Time)	ADDITIONAL NOTES

Mojave Solar

Common Raven Fixed Point Observation Data Sheet

Date (mmddyy) 5/29/14 Observer (init.) JRV Start Time 1012 End Time 1022 Obs Pt (2)

Page 2 of 7

Visibility: (Clear) or Min _____ Max _____ (m)

Wind Direction from (circle one): Calm N NE E SE S (SW) W NW Variable Speed: (Low) High ____ (km/h)

Precipitation (circle one): (none) light rain rain snow sleet hail fog other Temp: [redacted] (°F) Cloud Cover: 0 %

Obs #	Time	Sex	Age	# of birds	Activity (circle 1st, X others)	Flight Dir (to)	Horizontal Distance (m) 1st	Horizontal Distance (m) closest	Habitat Type/ Perch Structure	Aud?	Vis?	Notes
1					WA PE FL OT							
2					WA PE FL OT							
3					WA PE FL OT							
4					WA PE FL OT							
5					WA PE FL OT							
6					WA PE FL OT							
7					WA PE FL OT							
8					WA PE FL OT							
9					WA PE FL OT							
10					WA PE FL OT							
11					WA PE FL OT							
~~12~~					WA PE FL OT							

NONE OBSERVED

Activity Codes: WA-walking on ground, PE-perched above ground, FL-flying, OT-other (please specify)
Habitat Codes: CBS-Creosote Bush Scrub, SD/SS-Sand Dunes/Sand Sheets, DP-Desert Pavement, OT-other (please specify, provide details of Project structure/facility)

OBS. # (Time)	ADDITIONAL NOTES

Mojave Solar

Common Raven Fixed Point Observation Data Sheet

Date (mmddyy) 5/29/14 Observer (init.) SRV Start Time 1023 End Time 1033 Obs Pt. (3)

Page 3 of 7

Visibility: (Clear) or Min _____ Max _____ (m)

Wind Direction from (circle one): Calm N NE E SE S (SW) W NW Variable Speed: (Low) High ____ (km/h)

Precipitation (circle one): (none) light rain rain snow sleet hail fog other Temp: ~~[illegible]~~ (°F) Cloud Cover: 5 %

Obs #	Time	Sex	Age	# of birds	Activity (circle 1st, X others)	Flight Dir (to)	Horizontal Distance (m) 1st	Horizontal Distance (m) closest	Habitat Type/ Perch Structure	Aud?	Vis?	Notes
1					WA PE FL OT							NOVE OBSERVED
2					WA PE FL OT							
3					WA PE FL OT							
4					WA PE FL OT							
5					WA PE FL OT							
6					WA PE FL OT							
7					WA PE FL OT							
8					WA PE FL OT							
9					WA PE FL OT							
10					WA PE FL OT							
11					WA PE FL OT							
12					WA PE FL OT							

Activity Codes: WA-walking on ground, PE-perched above ground, FL-flying, OT-other (please specify)
Habitat Codes: CBS-Creosote Bush Scrub, SD/SS-Sand Dunes/Sand Sheets, DP-Desert Pavement, OT-other (please specify, provide details of Project structure/facility)

OBS. # (Time)	ADDITIONAL NOTES

Mojave Solar

Common Raven Fixed Point Observation Data Sheet

Date (mmddyy) 5/29/14 Observer (init.) JRV Start Time 1035 End Time 1045 Obs Pt (4)

Page ___ of ___

Visibility: (Clear) or Min ____ Max ____ (m)

Wind Direction from (circle one): Calm N NE E SE S (SW) W NW Variable Speed: (Low) High ____ (km/h)

Precipitation (circle one): (none) light rain rain snow sleet hail fog other Temp: 68 (°F) Cloud Cover: 5 %

Obs #	Time	Sex	Age	# of birds	Activity (circle 1st, X others)	Flight Dir (to)	Horizontal Distance (m) 1st	Horizontal Distance (m) closest	Habitat Type/ Perch Structure	Auc?	Vis?	Notes
1					WA PE / FL OT							
2					WA PE / FL OT							
3					WA PE / FL OT							
4					WA PE / FL OT							
5					WA PE / FL OT							
6					WA PE / FL OT							
7					WA PE / FL OT							
8					WA PE / FL OT							
9					WA PE / FL OT							
10					WA PE / FL OT							
11					WA PE / FL OT							
12					WA PE / FL OT							

NONE OBSERVED

Activity Codes: WA-walking on ground, PE-perched above ground, FL-flying, OT-other (please specify)

Habitat Codes: CBS-Creosote Bush Scrub, SD/SS-Sand Dunes/Sand Sheets, DP-Desert Pavement, OT-other (please specify, provide details of Project structure/facility)

OBS. # (Time)	ADDITIONAL NOTES

Mojave Solar

Common Raven Fixed Point Observation Data Sheet

Date (mmddyy) 5/29/14 Observer (init.) JRV Start Time 1154 End Time 1204 Obs Pt. (5)

Page 5 of 7

Visibility: (Clear) or Min _____ Max _____ (m)

Wind Direction from (circle one): Calm N NE E SE S (SW) W NW Variable Speed: (Low) High ____ (km/h)

Precipitation (circle one): (none) light rain rain snow sleet hail fog other Temp: 83 (°F) Cloud Cover: 5 %

Obs #	Time	Sex	Age	# of birds	Activity (circle 1st, X others)	Flight Dir (to)	Horizontal Distance (m) 1st	Horizontal Distance (m) closest	Habitat Type/ Perch Structure	Aud?	Vis?	Notes
1					WA PE FL OT							
2					WA PE FL OT							NONE OBSERVED
3					WA PE FL OT							
4					WA PE FL OT							
5					WA PE FL OT							
6					WA PE FL OT							
7					WA PE FL OT							
8					WA PE FL OT							
9					WA PE FL OT							
10					WA PE FL OT							
11					WA PE FL OT							
12					WA PE FL OT							

Activity Codes: WA-walking on ground, PE-perched above ground, FL-flying, OT-other (please specify)

Habitat Codes: CBS-Creosote Bush Scrub, SD/SS-Sand Dunes/Sand Sheets, DP-Desert Pavement, OT-other (please specify, provide details of Project structure/facility)

OBS. # (Time)	ADDITIONAL NOTES

Mojave Solar

Common Raven Fixed Point Observation Data Sheet

Date (mmddyy) 5/29/14 Observer (init.) JRV Start Time 1110 End Time 1120 Obs Pt. 6

Page 6 of 7

Visibility: (Clear) or Min ____ Max ____ (m)

Wind Direction from (circle one): (Calm) N NE E SE S SW W NW Variable Speed: (Low) High ____ (km/h)

Precipitation (circle one): (none) light rain rain snow sleet hail fog other Temp: 83 (°F) Cloud Cover: 5 %

Obs #	Time	Sex	Age	# of birds	Activity (circle 1st, X others)	Flight Dir (to)	Horizontal Distance (m) 1st	Horizontal Distance (m) closest	Habitat Type/ Perch Structure	Aud?	Vis?	Notes
1					WA PE FL OT							
2					WA PE FL OT							
3					WA PE FL OT							NONE
4					WA PE FL OT							
5					WA PE FL OT							OBSERVED
6					WA PE FL OT							
7					WA PE FL OT							
8					WA PE FL OT							
9					WA PE FL OT							
10					WA PE FL OT							
11					WA PE FL OT							
12					WA PE FL OT							

Activity Codes: WA-walking on ground, PE-perched above ground, FL-flying, OT-other (please specify)
Habitat Codes: CBS-Creosote Bush Scrub, SD/SS-Sand Dunes/Sand Sheets, DP-Desert Pavement, OT-other (please specify, provide details of Project structure/facility)

OBS. # (Time)	ADDITIONAL NOTES

Mojave Solar

Common Raven Fixed Point Observation Data Sheet

Date (mmddyy) 5/29/14 Observer (init.) JRV Start Time 1125 End Time 1135 Obs Pt. 7

Page 1 of 7

Visibility: (Clear) or Min ____ Max ____ (m)

Wind Direction from (circle one): Calm N NE E SE S (SW) W NW Variable Speed: (Low) High ____ (km/h)

Precipitation (circle one): (None) light rain rain snow sleet hail fog other Temp: 84 (°F) Cloud Cover: 5 %

Obs #	Time	Sex	Age	# of birds	Activity (circle 1st, X others)	Flight Dir (to)	Horizontal Distance (m) 1st	Horizontal Distance (m) closest	Habitat Type/ Perch Structure	Aud?	Vis?	Notes
1	1127	-	A	1	WA (PE) FL OT	-	150	150	SITE POWER TWR	N	Y	
2					WA PE FL OT							
3					WA PE FL OT							
4					WA PE FL OT							
5					WA PE FL OT							
6					WA PE FL OT							
7					WA PE FL OT							
8					WA PE FL OT							
9					WA PE FL OT							
10					WA PE FL OT							
11					WA PE FL OT							
12					WA PE FL OT							

Activity Codes: WA-walking on ground, PE-perched above ground, FL-flying, OT-other (please specify)

Habitat Codes: CBS-Creosote Bush Scrub, SD/SS-Sand Dunes/Sand Sheets, DP-Desert Pavement, OT-other (please specify, provide details of Project structure/facility)

OBS. # (Time)	ADDITIONAL NOTES

Attachment 4
Observed Wildlife Species List

Observed Wildlife Species List May 2014 Mojave Solar Project		
Common Name	*Scientific Name*	**Status State/Federal**
Reptiles		
Western Whiptail	*Aspidoscelis tigris*	__/__
Red Racer	*Coluber flagellum piceus*	__/__
Gopher Snake	*Pituophis catenifer*	__/__
Desert Spiny Lizard	*Sceloporus magister*	__/__
Side-blotched Lizard	*Uta stansburiana*	__/__
Birds		
Spotted Sandpiper	*Actitis macularius*	__/__
Red-winged Blackbird	*Agelaius phoeniceus*	__/__
House Finch	*Carpodacus mexicanus*	__/__
Killdeer	*Charadrius vociferus*	__/__
Rock Dove	*Columba livia*	__/__
Common Raven	*Corvus corax*	__/__
Snowy Egret	*Egretta thula*	__/__
American Kestrel	*Falco sparverius*	__/__
Greater Roadrunner	*Geococcyx californianus*	__/__
House Sparrow	*Passer domesticus*	__/__
Western Meadowlark	*Sturnella neglecta*	__/__
European Starling	*Sturnus vulgaris*	__/__
Mourning Dove	*Zenaida macroura*	__/__

Observed Wildlife Species List May 2014 Mojave Solar Project		
Common Name	*Scientific Name*	**Status State/Federal**
Mammals		
White-tailed Antelope Squirrel	*Ammospermophilus leucurus*	__/__
Black-tailed Jackrabbit	*Lepus californicus*	__/__
Desert Kit Fox	*Vulpes macrotis*	CSC/__

Status Codes:

Federal:

FE = Federally listed endangered: species in danger of extinction throughout a significant portion of its range

FT = Federally listed, threatened: species likely to become endangered within the foreseeable future

State:

SE = State listed as endangered

ST = State listed as threatened

CSC = California Species of Special Concern Species of concern to CDFW because of declining population levels, limited ranges, and/or continuing threats have made them vulnerable to extinction.

CCR = protected by the California Code of Regulations

WL = Watch List

CDF-S = California Department of Forestry Sensitive

Appendix C
Cultural Resources

Mojave Solar Project
Monthly Compliance Report
San Bernardino County, California

May 2014 Reporting Period

CH2M HILL
2485 Natomas Park Drive
Suite 600
Sacramento, CA
95833-2937
Tel: 916.920.0300
Fax: 916.920.8463

June 4, 2014

Dale Rundquist
Compliance Project Manager
California Energy Commission
1516 Ninth Street
Sacramento, CA 95814

Subject: Abengoa Mojave Solar Project (09-AFC-5C)
Monthly Compliance Report CUL-1 and CUL-6

Dear Mr. Rundquist:

CH2M HILL is assisting Abengoa Solar LLC (Abengoa) in complying with California Energy Commission (CEC) Conditions of Certification, specifically CUL-1 and CUL-6, for cultural resource monitoring, as set forth in the Commission Decision for the Mojave Solar Project (MSP). This report covers the cultural resources monitoring conducted from May 1, 2014, through May 31, 2014, by CH2M HILL.

Personnel Active in Cultural Monitoring This Period

The Cultural Resources Monitors (CRMs) included: Sonia Sifuentes and Jesse Shelmire. The Native American Monitors (NAMs) included: Tommy Herrera, Rebecca Brierty, Vanessa Brierty, Joseph Lente, and Leona Gilvin. Additionally, Cultural Resource Specialist (CRS), Gloriella Cardenas, was periodically onsite.

Monitoring and Associated Activities This Period

Ground-disturbing activities subject to cultural resource monitoring occurred in various locations of the MSP. In Alpha East, electrical conduit, Verizon communication installations, fiber optic cable trenching, multimedia filter crossings, and transformer foundations were monitored. In Alpha West, cabinet foundations were monitored. In Beta East, cabinet foundations, raw water line trenching, transformer foundations, and fiber optic cable trenching required monitoring.

Cultural Resources Discoveries This Period

None.

Anticipated Changes in the Next Period

Monitoring will continue for various foundations, electrical trenching, drainages, water line trenching, and other activities. Cultural monitoring crews will remain onsite to continue monitoring and to respond to discoveries if they occur.

Comments, Issues or Concerns

During the reporting period, one non-compliant event occurred resulting in a non-compliance report (NCR) being issued.

NCR No. 10

On Tuesday May 13, 2014, cultural monitors were scheduled to monitor a trench for fiber optic installations from 7:00 a.m. to 10:00 a.m. with the subcontractor Abacus; the activity did not take place and was rescheduled.

On Wednesday May 14, 2014, cultural monitors arrived at 7:00 a.m. to the location of where the fiber optics trenching was to take place, to find the excavation had been started, the day before at 12:00 p.m. This excavation occurred during an unscheduled time, monitors were not notified; therefore, they were not present for the trenching. The unmonitored trench excavation measured 5 feet in length, 2 feet in width and 2 feet in depth and was located in Alpha East, in the solar field, between mirror rows H-126 and H-127. Soils were examined to assess for impacts to cultural resources; none were noted as a result of this non-compliance event.

Because conducting ground disturbance of native sediments without cultural monitoring is a non-compliance issue per CUL-6, an NCR was issued.

NCR No. 10 Resolution

The recommendations were as follows:

1. Because this is the third infraction with the subcontractor (see Cultural NCR No. 1 and 8), upon receipt of this NCR the parties involved should undergo an immediate review of procedures for ground-disturbing operations and be placed on suspension from work for a minimum of 5 working days. The subcontractor shall be placed on a probationary status for the remainder of the contract. Termination of work/contract should occur upon another infraction by these parties.
2. A general requirement should be provided by the Project Owner that no excavations whatsoever are to occur without a cultural resources monitor present, or without a specific clearance from the CRS directly.
3. Construction is recommended to realign their work to be in compliance with the Conditions of Certification, existing plans, and SHPO stipulations regarding Determination of No Adverse Effects, specifically, the specifications listed in the Modification in the Mojave Solar Plant Construction Cultural Monitoring Requirements, dated April 9, 2013.

On May 15, 2014, at the request of cultural stakeholders, a call was held in order to discuss non-compliance issues and construction, specifically, NCR No. 10. This meeting resulted in concurrence by the CEC and the Department of Energy (DOE), of the recommended resolutions.

On May 16, 2014, a document was provided by the contractor stating completion of the resolutions. However, the documented resolutions differed from those recommended by the CRS and approved by the CEC and DOE.

On May 19, 2014, additional documentation was requested to provide support that the resolutions found in the NCR No. 10 were adhered to.

On May 28, 2014, a request by the contractor was sent to the CEC to rescind NCR No. 10.

The NCR No. 10 Resolution report and contractor documentation are included in an attachment to this letter.

Sincerely,

CH2M HILL



Gloriella Cardenas, M.A., RPA
Cultural Resources Specialist

Attachment: NCR No. 10 Resolution Report

Attachment
NCR No. 10 Resolution Report

NON-COMPLIANCE RESOLUTION REPORT

MOJAVE SOLAR, LLC

MOJAVE SOLAR PROJECT

NCR Number: Cultural NCR No. 10 **Date:** 5-13-2014 **NCRR Number:** 10

Documenter: Gloriella Cardenas **Time:** 12:00pm

Describe Affected Resources:

Potential impacts could have included undiscovered buried deposits of cultural resources.

Summary of Corrective Actions:

The recommendations were as follows:

1. Because this is the third infraction with the sub-contractor (see Cultural NCR No. 1 and 8), upon receipt of this NCR, the parties involved should undergo an immediate review of procedures for ground disturbing operations and be placed on suspension from work for a minimum of five working days. The subcontractor shall be placed on a probationary status for the remainder of the contract. Termination of work/contract should occur upon another infraction by these parties.
2. A general requirement should be provided by the Project Owner that no excavations whatsoever are to occur without a cultural resources monitor present, or without a specific clearance from the CRS directly.
3. Construction is recommended to realign their work to be in compliance with the Conditions of Certification, existing plans, and SHPO stipulations regarding Determination of No Adverse Effects, specifically, the specifications listed in the Modification in the Mojave Solar Plant Construction Cultural Monitoring Requirements, dated April 9, 2013.

On May 16, 2014 the contractor provided documentation that resolutions were met. However, the resolutions the contractor implemented differed from those addressed by the CRS. The contractor's resolutions are found below.

AEPC will implement the following actions:

1. Activity managers, supervisors, and coordinators underwent a review of procedures for ground disturbance. Abacus, the subcontractor involved in the infraction committed on 05/13/2013, has been put on probationary status for the remainder of their contract and communicated via a Non-Conformity from AEPC of their 5 day suspension upon their third infraction (see attached sign-in sheet and email confirming the submittal of the NCR).
2. As per CRS's email, AEPC will provide daily monitoring schedule maps to all monitors, via CRS, effective immediately. Deliverable to stakeholders will still be sent out daily to reflect the quantity of monitors requested the next day.
3. Activity managers, supervisors, and coordinators have undergone a review of the COC and SHPO for Mojave Solar Project in regards to cultural compliance. Attached is sign-in-sheet acknowledging review by 05/16/2013, official deadline.

These resolutions were found to be inadequate and additional documentation was requested on May 19, 2014 by the CRS. As of June 4, 2014, the NCR No. 10 resolutions have not been completed.

ABEINSA EPC

MOJAVE

Customer Non Conformity Report

Project: Mojave Solar Project	Reference: CUL-6 NCR 10
Date: 05/15/2014	
Affected Area: Construction	

Description of the problem:
On Tuesday May 13, 2014, cultural monitors were scheduled to monitor a trench for fiber optic installations between the hours of 7:00 am to 10:00 am with the sub-contractor Abacus. This excavation did not take place during this scheduled time period. On Wednesday May 14, 2014, cultural monitors were rescheduled to monitor the fiber optics trenching. The cultural monitors arrived at 7:00 am to the location to find the excavation had already taken place, the day before starting at 12:00 pm. The non-monitored trench measured 5 ft in length, 2 ft in width and 2 ft in depth and was located in Alpha East, in the solar field, between mirror rows H-126 and H-127. Soils were examined to assess for impacts to cultural resources; none were noted as a result of this non-compliance event. Because conducting ground disturbance of native sediments without cultural monitoring is a non-compliance issue per CUL-6, this NCR was issued. Additionally, this is the sub-contractor's third non-compliance incident regarding excavating without cultural monitors present for ground disturbing activities.

Requires preventive action: No ☐ Yes ☒ (IA Opening)

IRP No:	Date: 5/15/14
IRP Evaluator:	

Preventative measures to prevent any future infraction of CUL-6.

Root Cause:

Unfulfilled Procedure - Potential impacts could have included destruction of buried cultural deposits.

Corrective Action:	
IRP Coordinator: Steven Pochmara	Date: 5/15/2014

ABEINSA EPC

MOJAVE

Comment:
AEPC will implement the following actions:
a. Activity managers, supervisors, and coordinators underwent a review of procedures for ground disturbance. Abacus, the subcontractor involved in the infraction committed on 05/13/2013, has been put on probationary status for the remainder of their contract and communicated via a Non-Conformity from AEPC of their 5 day suspension upon their third infraction (see attached sign-in sheet and email confirming the submittal of the NCR).
b. As per CRS's email, AEPC will provide daily monitoring schedule maps to all monitors, via CRS, effective immediately. Deliverable to stakeholders will still be sent out daily to reflect the quantity of monitors requested the next day.
c. Activity managers, supervisors, and coordinators have undergone a review of the COC and SHPO for Mojave Solar Project in regards to cultural compliance. Attached is sign-in-sheet acknowledging review by 05/16/2013, official deadline.

Attachments :

- WEAP Training Sign-In Sheet – 5/16/14)

NCR Coordinator:
Steven Pochmara

Position: Permitting Manager

Signature of Coordinator:

NCR Evaluator:
Nicolas Gallo Massa

Position: Project Sub-Director

Signature of Evaluator:

NCR Supervisor:
Efrain Perez

Position: Quality Manager

Signature of Supervisor:

ABEINSA EPC

Christian Oziel Bojorquez
05/16/2014 01:42 PM

Send To	Holmes Bassette/Solar/Abengoa@Abengoa
cc	Document Control - Mojave, Efrain Perez/AbeinsaEPC/Abengoa@Abengoa, Frances Sanchez/Solar/Abengoa@Abengoa, Frederick Redell/Solar/Abengoa@Abengoa, Kathleen Sullivan/Solar/Abengoa@Abengoa, Mercedes Macias Paris/AbeinsaEPC/Abengoa@Abengoa, Mojave
bcc	
Subject	Re: SAL:6200-6007-INF-ATM-ASI-2622 Resolution Report CUL NCR 10

History: This memo has been replied

Hello, Trey.

The Abacus crew involved in the violation reported will be trained next Monday in the morning. Quality will provide you the training record signed by all of them.

Abacus also received a warning, because there were previous violations. Safety is aware of this violation, too. They are waiting for the sworn statements.

Any question or comment, please let me know.

Regards,

Christian Oziel Bojorquez - Quality Engineer

ABEINSA EPC
Abener Teyma Mojave General Partnership
42134 Harper Lake rd. Hinkley, CA. 92347
Cell: 661-754-6697
christian.oziel@abeinsaepc.abengoa.com

Eco-Tip: Printing e-mails is usually a waste.

Holmes Bassette Christian, Please revise the resolution... 05/16/2014 12:11:33 PM

ABENGOA SOLAR

Holmes Bassette
05/16/2014 12:11 PM

Send To:	Christian Oziel Bojorquez/AbeinsaEPC/Abengoa@Abengoa
cc:	Document Control - Mojave, Efrain Perez/AbeinsaEPC/Abengoa@Abengoa, Frances Sanchez/Solar/Abengoa@Abengoa, Frederick Redell/Solar/Abengoa@Abengoa, Kathleen Sullivan/Solar/Abengoa@Abengoa, Mercedes Macias Paris/AbeinsaEPC/Abengoa@Abengoa, Mojave Subs/Teyma/Abengoa@Abengoa, Nicolás Gallo Massa/AbeinsaEPC/Abengoa@Abengoa, Pablo Enrique Schenone Laborde/AbeinsaEPC/Abengoa@Abengoa, Steven Pochmara/AbeinsaEPC/Abengoa@Abengoa, Vernon Leeming/AbeinsaEPC/Abengoa@Abengoa, William Grisolia/Solar/Abengoa@Abengoa
Subject:	Re: SAL:6200-6007-INF-ATM-ASI-2622 Resolution Report CUL NCR 10

Christian,

Please revise the resolution proposal to clarify that the Abacus crew involved in the violation will be placed on probation. As it is currently written, it could be interpreted that Abacus as a whole will be placed on probation.

Upon receipt of the revision, the resolution will be forwarded for consideration and acceptance.

Thank you and kind Regards,

Holmes Bassette - (Trey)
Director of Permitting

ABENGOA SOLAR

Abengoa Solar Inc.
Abengoa Solar Inc.
11500 W.13th Avenue, Lakewood, CO 80215
Phone: 636-519-3640 (x86250) Cell: 720-289-5542
Holmes.Bassette@solar.abengoa.com

Eco-Tip: Printing e-mails is usually a waste.

Christian Oziel Bojorquez	Good morning, Trey. Please f...	05/15/2014 04:34:31 PM

Appendix D
Paleontological Resources

Mojave Solar Project
Monthly Compliance Report
San Bernardino County, California

May 2014 Reporting Period

SWCA
ENVIRONMENTAL CONSULTANTS
Sound Science. Creative Solutions.

Pasadena Office
150 S. Arroyo Parkway, 2nd Floor
Pasadena, CA 91105
Tel 626.240.0587 Fax 626.240.0607
www.swca.com

Mr. Dale Rundquist, CPM
(09-AFC-5C)
California Energy Commission
1516 Ninth Street (MS-2000)
Sacramento, CA 95814

June 5, 2014

RE: PAL-5, Summary of Paleontological Monitoring and Mitigation Activities at the Mojave Solar Project (MSP) for the period of May 2014

Dear Mr. Rundquist:

This letter is to confirm SWCA Environmental Consultants paleontological monitoring and mitigation activities at the MSP site during the period of May 1 through May 31, 2014. As of February 28, 2014, major ground-disturbing activities for the MSP have been completed and SWCA's monitoring services are no longer required onsite. No paleontological monitoring occurred during the above-referenced period.

It has been a pleasure working with you on this project. If you have any questions please do not hesitate to contact me at 626 240 0587 ext 6605 or at ccorsetti@swca.com.

Respectfully,

Cara Corsetti, M.S.
Principal
Paleontological Resources Specialist, MSP

Appendix E
Worker Safety

Mojave Solar Project
Monthly Compliance Report
San Bernardino County, California

May 2014 Reporting Period

Monthly Safety Inspection Report
Larry Davis, Mojave Solar Project Safety Manager
May, 2014

Record of all employees trained for the month
Worked **5,052,100** hours project to date with **67** recordable incidents. **8,684** new employee orientations completed to date. **5,645** visitor safety orientations completed to date. **316** new employee orientations were completed in the month of May.

Summary report of safety management actions and safety-related incidents that occurred:

- **Light level measurements continue to be taken on night shift to ensure compliance for OSHA standards.**
- **Outfitting cool down tents in Alpha and Beta with tables and benches.**
- **Master Chemical List has been updated for all subcontractors on site.**
- **Solutia VP-1 deliveries continue in both Alpha and Beta to the Overflow tanks.**
- **H&S is conducting a complete audit of all H&S incidents and injuries including follow up corrective actions.**
    - **Zurich Reporting Officer added.**
    - **Incident Investigation Team (IIT) created.**

Safety management actions included WEAP and new employee orientation training, safety committee meetings and training classes for Confined Space, HTF Awareness, AWP, LOTO/ 70E , and HIPP/Off Angle Focus training. H&S continues with monthly subcontractor audits. Weekly inspection with Bureau Veritas revealed no major safety issues and all other issues corrected right away. Worker Safety-2, Emergency Response Plan, and HTF Spill Procedure have been approved by the CEC. Santa Fe/Pipe Line/BNSF right of way Rd update: Violators detected during the month of May had their site access badges deactivated and site access denied.

Recordable incidents in previous months (Updates on bold)

August 2013 open case

- Case #3 8/15/13. Milco. Worker fell while unloading HTF flex pipe resulting in a bruised tailbone. First Aid case reclassified as Lost Time on January 8, 2014.

October 2013 open cases

- Case #4: 10/16/2013. HLC. Left shoulder strain. Recordable reclassified as Lost Time.
- 10/16/2013. E.W. Corp. Physical Altercation Case. This non-occupational case is currently under worker compensation court review.

November 2013 open cases pending closure by Zurich

- Case #1: 11/19/2013. HLC. Worker suffered right clavicle dislocation resulting in RTW modified Duty. Retrained in safe work practices. Classified as recordable.

December 2013 open cases

- Case #1: 12/18/2013. Murray. Worker was unloading material from a flatbed trailer lost his footing and fell backwards to the ground and landed on left hip and leg area. Classified as Lost Time.

Report of accidents and injuries that occurred during the month of May:

Three RWDC's were incurred in the month of May 2014.

Case #1: 5/13/2014 – Abacus, Corneal abrasion/conjunctivitis right eye; Classified as RWDC

- **Employee retrained on proper selection and use of goggles for windy/dusty hazard conditions.**

Case #2: 5/22/2014 – Abacus, Left knee strain; Classified as RWDC

- **Employee retrained on ergonomics (body position motion) and walking/working surfaces.**

Case #3: 5/30/2014 – Abacus, Lower back strain/muscle spasm; Classified as RWDC

- **Employee retrained on body positioning, stretch and flex.**

No report of any continuing or unresolved situations and incidents that may pose danger to life or health.

Currently we have an average of **1,283** employees on site daily.
Landing Zone prepared for emergency evacuation cleared at all times.

Construction has worked **5,052,100** hours with **67** recordable cases.
Total Recordable Incident Rate, (TRIR), for Project in the month of May is **1.73%**
Total Recordable Incident Rate, (TRIR), for year to date is **2.75%**
Total Recordable Incident Rate, (TRIR), for Project to date is **2.65%**
Total Lost Work day cases- **14**, Lost Work days total – **1,010**

ABENER TEYMA MOJAVE

Safety Conditions Check List

Internal by Work Site

Mojave Solar Project	
Activities performed:	
Safety Inspection Report **Record periodically (monthly)** **May, 2014**	

Date:	Time:	Project Name & Number
5.21.14	11:45 am	Mojave Solar Project -4A6007
Inspected by:		**Title**
Larry Davis		Safety Manager
Accompanied by:		**Title**
Raivo Neggo		BV Safety

A	Safety & Risk Management Program Administration & Record Keeping	Values				Comments
		1	2	3	N/A	
1	Is there a Safety Manual, 29 CFR Sub Part 1926 and HAZCOM Manuals available on-site?			3		
2	Are there Weekly Safety meetings (Toolbox Talks) conducted and documented?			3		
3	Is the Weekly Job Safety Inspection conducted and documented?			3		
4	Are the Federal & State Labor Notices posted in a conspicuous location?			3		
5	Are the Emergency phone numbers & Doctors list posted conspicuously?			3		
6	Are the Company vehicle operators authorized per company policy?			3		
7	Are the New employee orientations documented for all new subcontractor employees?			3		
8	Are the PM follow up letters to subcontractors re: Serious Violations on file?			3		
9	Is the approved safety plan including the emergency action plan on site?			3		
10	Is the Safety Plan updated to reflect any/all scope changes?			3		
B	**Ladders & Stairways - OSHA Subpart X**	**Values**				**Comments**
1	Are the ladders inspected for defects?			3		
2	Are extension ladders extending 3 ft. above landing?			3		
3	Are extension ladders pitched at 1 ft. out from vertical for every 4 ft. of height?			3		
4	Are straight ladders secured in place?			3		
5	Are the straight ladders equipped with safety feet?			3		

ABENER TEYMA MOJAVE

Safety Conditions Check List

Internal by Work Site

6	Are the step ladders used only in open position?			3		
7	Are the stepladders tall enough for job without using top step, second step from top step or platform?			3		
8	Is the use on non-conductive (non-metal) ladders only in proximity of electricity?			3		
9	Are the stairways, ramps, and landing equipped with rails and handrails?			3		.
10	Are the stairways and/or landings in use poured, filled, finished and free of debris, slip, trip or fall hazards?			3		
11	Are the stairways adequately lighted?			3		
12	Do the permanent ladders meet OSHA 1910 standards?			3		
C	**Fall Protection OSHA - Subpart M**	**Values**				**Comments**
1	Are the floor/roof deck openings protected with properly secured and marked covers or guardrails?			3		
2	Are the wall openings/open-sided floors protected with fall protection/prevention systems?			3		
3	Are the workers exposed to falls of 6' or more provided with and required to use personal fall arrest systems (PFAS) when not protected by guardrails?			3		
4	Are the exposed rebar in work areas properly protected - capped, etc.? Both vertical and horizontal?		2			Abacus missing rebar caps Corrected at time of discovery
5	Are specialty trades, I.e., roofers, ironworkers, etc., working under fall protection plans prepared by them and approved by controlling contractor?			3		
6	Are the PFAS - Harnesses, Lanyards, Anchorage Points, Lifelines and Retractables inspected?	1				ARB harness not inspected Corrected at time of discovery
7	Are the anchorage Points 5K per person?			3		
D	**Demolition – OSHA Subpart T**	**Values**				**Comments**
1	Is the Engineering Survey completed and documented?				N/A	
2	Is the work area "Identified & Protected", i.e., electricity, gas, water, sprinkler system?				N/A	
E	**Scaffolds and Aerial Lifts – OSHA Subpart L**	**Values**				**Comments**
1	Is there a competent Person, designated in writing, assigned to supervise operations and conduct documented daily inspections and on-site full time?			3		
2	Are the working surfaces 6' or higher equipped with guardrails?			3		
3	Are the working surfaces clear of debris, slip, trip and fall hazards?			3		
4	Are the plumbs, tied in as necessary, safe footing, base plates, mudsills assembled and erected properly -? Are they equipped with all pins and bracing? Is a complete platform?			3		

ABENER TEYMA MOJAVE

Safety Conditions Check List

Internal by Work Site

5	Is there a safe means of access to platform provided?			3		
6	Are the wheels locked on rolling units when platform occupied?			3		
7	Are the scaffolds at least 10 ft. from energized power lines?			3		
8	Are the workers tied off in articulating boom lift?			3		
9	Is the aerial lift on level surface?			3		
10	Has safety been notified in advance of erecting a suspended scaffold?			3		
11	Is there a competent Scaffold Person inspected and signed-off on scaffold prior to each shift daily?			3		
12	Is a Tagging system used?			3		
F	**Excavations & Trenches – OSHA Subpart P**	**Values**				**Comments**
1	Is there a competent Person, designated in writing, assigned to supervise operations and conduct documented daily inspections and on site full time?			3		
2	Are all excavations and trenches 5 ft. or greater in depth equipped with Protective Systems (shoring/shielding or sloped/benched)?			3		
3	Are the ladders or other means of quick exit within 25 ft. of lateral travel for workers?			3		
4	Is the Spoil pile at least 3 ft. from edge of excavation or trench?			3		
5	Are the Underground utilities located & marked before excavation starts? (Verify ticket/maps/plans)			3		
6	Are the barricades provided around all open excavations?	1				Abacus/ARB missing information tags on barricades Corrected at time of discovery
7	Is the Equipment kept at proper distance from occupied excavations/trenches to minimize risk of cave-in or equipment falling in on workers?			3		
8	IF 20' OR DEEPER Has Safety been notified?			3		
9	IF 20' OR DEEPER, are the protective systems designed by a RPE?			3		
10	Are the Surface and subsurface encumbrances identified?			3		
11	Are the Water, atmospheric conditions, & surcharge loads considered?			3		
G	**Motor Vehicles, Mechanized Equipment – OSHA Subpart**	**Values**				**Comments**
1	Are the Tractors, backhoes, other vehicles equipped with operable backup alarms?			3		
2	Are the Operators required wearing seat belts when provided on equipment?	1				Abacus employee's witnessed not using seatbelts on site mules. Corrected at time of discovery
3	Is the Forklift/Lull operator certification documented and available on project?			3		
4	Is a High visible vest worn around earth moving equipment?			3		
H	**Electrical – OSHA Subpart K**	**Values**				**Comments**

ABENER TEYMA MOJAVE

Safety Conditions Check List

Internal by Work Site

1	Are the Ground fault circuit interrupters (GFCI) used with all temporary wiring, e.g., extension cords and power from welding machines?	1				ARB welding machine with bad connection shut down and repaired.
2	Is the GFCI in good appearance and in working order?			3		
3	Are All tools and equipment inspected for defects in cords and plugs?	1				DMI cords not being inspected prior to use. Cords removed from service with damages.
4	Are the Extension cords and ground pins are in good condition?	1				DMI cords not being inspected prior to use. several removed from service without ground pins
5	Are the Sources of electricity, such as energized panel boxes, overhead lines, etc., properly marked, barricaded and protected? Inspected by a Qualified Person?			3		
6	Is there an adequate lockout/tag out/try out procedures in place to protect employees?			3		
7	Is the Temporary Lighting installed properly? (i.e. parking, construction trailer, & site)			3		
I	**Personal Protective Equipment – OSHA Subpart E**	**Values**				**Comments**
1	Is an adequate eye protection available and worn when required?			3		
2	Is a Hearing protection available and used when necessary?			3		
3	Are Hard hats available and worn at all times?			3		
4	Are Work boots with protective toes worn by all employees?	1				Individual witnessed w/o protected toe box shoes 3 day suspension/re-attend orientation
5	Are All employees wearing shirts with sleeves?			3		
6	Is a Hand protection available and in use when required?			3		
7	Is there a Written respirator program available?			3		
8	Are they Using N95 respirators for "voluntary use"?			3		
9	Are the PFAS inspected by employees prior to use?			3		
J	**Fire Prevention – OSHA Subpart F**	**Values**				**Comments**
1	Are the flammable/combustible liquids stored away from ignition sources and identified by warning signs?			3		
2	Are the approved metal safety cans utilized for storing all liquid flammables?			3		
3	Are the fuel tanks surrounded by containment and 20' from building?			3		
4	Are an adequate number of charged fire extinguishers available? With-in 75'?			3		
5	Are the Extinguishers properly located, protected, Inspected?			3		
6	Are the Flammable/combustible debris & storage kept away from welding & cutting?			3		
K	**Welding & Cutting - OSHA Subpart J**	**Values**				**Comments**
1	Are welding leads in good condition?			3		
2	Is a Portable fire extinguisher located within 20' of all welding operations?			3		

Safety Conditions Check List

Internal by Work Site

3	Are Fire blankets available and used to cover combustible material located around welding operations?	1				FHI worker with inadequate protection for spark path Corrected at the time of discovery.
4	Are Hot Work Permits used when required?			3		
5	Is an Adequate use of fire curtains to enclose and shield welding operations?			3		
6	Are Hoses, torches, and gauges free from defects, dirt and hydrocarbons such as oil and grease?			3		
7	Are Regulators provided with flash arrestors?			3		
8	Are Welding / cutting helmets, eye protection, gloves, bibs, face shields available and properly used when necessary?			3		
9	Are the Stored oxygen and fuel cylinders separated by a minimum of 20 ft. with valve protection caps in place?		2			Hobbs Bannerman improper storage corrected at time of discovery
10	Are All cylinders firmly secured in upright position?			3		
11	Are Cylinders secured to welding cart, valve closed and caps on when not in use?			3		
12	Are Empty and full cylinders separated and marked?			3		
13	Are Flammable gas cylinders and oxygen gas cylinders are separated 20' apart?			3		
L	**Tools – Hand & Powered – OSHA Subpart I**	**Values**				**Comments**
1	Are Tools and equipment in good condition?			3		
2	Is the Defective equipment tagged as such and removed from work area?		2			ARB hand tool not tagged out in the work area.
3	Are Tools and equipment guards and handles in place and in good condition?		2			FHI worker without T handle on grinder Corrected at the time of discovery
4	Are the Powder actuated tool operators properly trained and documented?			3		
M	**Confined Space Entry - OSHA 29CFR1910.146**	**Values**				**Comments**
1	Is a competent Person / Entry Supervisor designated in writing? On site full time?			3		
2	Is an Entry permit properly issued prior to work starting?			3		
3	Is the Air sampling equipment available and properly used? Calibrated?			3		
4	Are the Air samples show acceptable oxygen concentrations of (19.5% to 23.5%)?			3		
5	Are the Air samples show space is free of toxic/flammable/explosive gases?			3		
6	Is there a Trained attendant assigned to maintain constant contact with workers inside space?			3		
7	Is there Trained person assigned to recheck air quality frequently throughout the project?			3		
8	Is there an Emergency rescue plan and equipment in place?			3		
N	**Hazard Communication - OSHA 29CFR1910.1200**	**Values**				**Comments**
1	Is there an Abeinsa EPC, Subcontractor MSDS's available?			3		
2	Is there an Abeinsa EPC List of Hazardous Chemicals current?			3		

ABENER TEYMA MOJAVE

Safety Conditions Check List

Internal by Work Site

3	Is there an Abeinsa EPC, Subcontractor written programs on site?			3		
4	Are the Containers labelled? Are the Notices posted?			3		
O	**Health and Safety - OSHA Subparts C & D**	**Values**				**Comments**
1	Is illumination, task lighting adequate?			3		
2	Are sanitary facilities adequate and clean?			3		
3	Is drinking water properly dispensed and community water containers cleaned and secured?			3		
4	Is First Aid kit stocked including latex gloves and Bloodborne clean-up kit?			3		
5	Are Eye wash stations available & accessible?			3		
P	**Housekeeping - OSHA Subparts C & D**	**Values**				**Comments**
1	Are Suitable containers available for disposal of trash, debris and recyclables?			3		
2	Are Walkways, aisles, hallways and passageways clear of trash, debris, materials?			3		
3	Are Tools not in use stored in job boxes?			3		
4	Is the Equipment not in use stored properly?			3		
5	Are Pipes and other materials stored kept neatly?			3		
6	Are Appropriate sub-contractors dumpsters available?			3		
Q	**Cranes and Hoists - OSHA Subpart N**	**Values**				**Comments**
1	Are Operator's "daily inspections" available for review?			3		
2	Is there an Annual Inspection and 3rd party crane inspection documented?			3		
3	Are the Swing radius barricaded?			3		
4	Are the Hydraulic crane outriggers padded and on stable ground?			3		
5	Are the Power lines at safe distance? De-energized or protected? (Check clearance heights)			3		
6	Are the Uniform signals properly used?			3		
7	Are Cable and slings regularly inspected and in good condition? Red is dead!			3		
8	Are Operable safety catches provided on load hooks?			3		
9	Is there a Proper rigging used for loads?			3		
10	Are the Operator qualifications on site?			3		
11	Is a competent training person involved with safe rigging practices?			3		
R	**Abatement & Remediation - OSHA Subparts D & Z**	**Values**				**Comments**
1	Is the Personnel trained & medically qualified including fit tests? Documentation on site?				N/A	
2	Are the three work zones delineated?				N/A	

ABENER TEYMA MOJAVE

Safety Conditions Check List

Internal by Work Site

3	Are workers wearing the correct level of protection?				N/A	
4	Is on-going air monitoring documented?				N/A	
5	Are vision panels installed where practical?				N/A	

S	Public Safety & General Liability – ANSI A.10-30-2001	Values				Comments
1	Is an adequate placement of flashers, barricades, signs around excavations and equipment or materials located in foot/vehicle traffic areas?			3		
2	Is Security in place? Is the Access control plan established?			3		
3	Is the fencing erected around laydown/material storage areas?			3		
4	Is the Site lighting meets 5-foot candles?			3		
5	Have All contractors submitted COI?			3		
6	Are the way (Traffic signs) signs clear?			3		
7	Are the Off-site work hazards identified?			3		
	Safety Deficiency Point Reduction **Inspection Score: 388 /408 = 95.0 %**					

Comments:

- PTD worked hours 5,052,100 hours with 67 recordable incidents.
- 8,684 New employee orientations completed to date.
- 5,645 Visitor safety orientations completed to date.
- 316 new employee orientations were completed in the month of May.

Weekly Safety Committee Meetings were held and the following trainings were offered: Combined AWP, Confined Space, LOTO & ARC Flash, HTF Awareness, HIPP/Off Angle Focus.

Appendix F
Engineering

Soil & Water
Waste
General Conditions
Civil
Structural
Mechanical
Electrical
Transmission System

Mojave Solar Project
Monthly Compliance Report
San Bernardino County, California

May 2014 Reporting Period

ABENER TEYMA MOJAVE

13911 Park Avenue, Suite 208
Victorville, CA 92392
Phone: 480-287-1419

Subject:	Mojave Solar Project (09-AFC-5C)
Condition No.:	Compliance5
Description:	Monthly Compliance Matrix
Submittal No.:	COMPLIANCE5-00-00

June 9, 2014
Mr. Dale Rundquist, CPM
California Energy Commission
1516 Ninth Street (MS-2000)
Sacramento, CA 95814
drundqui@energy.state.ca.us

Dear Mr. Rundquist,

As required by the California Energy Commission and more specifically by Condition of Certification COMPLIANCE5, attached please find an update to the following Compliances:

COMPLIANCE-2 [ASI + A/T]

The project owner shall maintain project files on-site or at an alternative site approved by the CPM for the life of the project, unless a lesser period of time is specified by the Conditions of Certification. The files shall contain copies of all "as-built" drawings, documents submitted as verification for Conditions, and other project-related documents. Energy Commission staff and delegate agencies shall, upon request to the project owner, be given unrestricted access to the files maintained pursuant to this Condition.
Hardcopy files of all "as-built" drawings and documents are available for review at the Abeinsa EPC Alpha east main site trailer.

COMPLIANCE-6 [ASI + A/T]

The first Monthly Compliance Report is due one month following the Energy Commission business meeting date upon which the project was approved, unless otherwise agreed to by the CPM. The first Monthly Compliance Report shall include the AFC number and an initial list of dates for each of the events identified on the Key Events List found at the end of this section of the Decision.

ABENER TEYMA MOJAVE

13911 Park Avenue, Suite 208
Victorville, CA 92392
Phone: 480-287-1419

The Key Events list has been included with current completed activity dates listed, please see attachment. The 2-month look ahead schedule has been included, please see attachment.

AIR QUALITY PERMIT

Air Quality permit amendment was submitted to MDAQMD on 10/19/2013. MDAQMD approved on 02/24/2014. MDAQMD submitted this approval to the CPM on 02/24/2014, MDAQMD submitted revised ATC to CPM on 03/14/2014. CPM provided revised conditions of certification on 03/21/2014. CPM staff review and public comment period took place on 04/22/2014, CEC approved air quality permit revision. CEC issued revised air quality permits on 04/28/2014.

AQ-12

Specifications for the Ullage Venting System resubmitted to CPM and MDAQMD on 05/28/2014, please see attachments.

AQ-26

Cooling Tower calculations and water sample test protocol submitted to CPM and MDAQMD on 05/23/2014, please see attachments. MDAQMD approved on 05/27/2014, please see attachment.

AQ-32

Hour meter for diesel fuel emergency backup generator submitted to CPM and MDAQMD on 05/20/2014, please see attachments.

AQ-43

Hour meter for diesel fuel emergency backup generator for fire pumps submitted to CPM and MDAQMD on 04/20/2014, please see attachments.

HAZ-1 [ASI and A/T]

The project owner shall not use any hazardous materials not listed in Appendix A (Hazardous Materials Proposed for Use at AMS During Operations), below, or in greater quantities or strengths than those identified by chemical name in Appendix A (Hazardous Materials Proposed for Use at AMS During Operations), below, unless approved in advance by the Compliance Project Manager (CPM). The project owner shall provide to the CPM, in the Annual Compliance Report, a list of hazardous materials contained at the facility. A revised chemical list was submitted to the CPM on 04/30/2014, CPM approved on 05/20/2014, please see attachment. HTF, Nitrogen, diesel fuel and gasoline were delivered during the month. The HTF, Beck Oil and Nitrogen delivery spreadsheets for May 2014 are included, as well as this month's Beck Oil delivery tickets, please see attachments.

ABENER TEYMA MOJAVE

13911 Park Avenue, Suite 208
Victorville, CA 92392
Phone: 480-287-1419

HAZ-2 [ASI and A/T]

At least 60 days prior to receiving any hazardous material on the site for commissioning or operations, the project owner shall provide a copy of a final Hazardous Materials Business Plan (HMBP), Spill Prevention, Control, and Countermeasure (SPCC) Plan, and a Process Safety Management (PSM) Plan to the CPM for approval.
The HMBP was submitted to the CPM and San Bernardino Fire Department on 07/23/2013. The CPM and SBCFD Haz Mat Division approved the HMBP on 08/01/2013 and 10/09/2013 respectively. The SPCC and PSM plans were submitted to the CPM on 10/29/2013, and SBCFD Haz Mat Division on 11/01/2013. The plans were approved by SBC Haz Mat Division as they stated that their only requirement is to have a copy of the SPCC on file at the site should a representative visit. The SPCC was approved by CPM on 11/25/2013. The PSM plan was returned with comments on 12/09/2013. Revised PSM plan, PHA, LOPA and O&M Manuals were resubmitted to the CPM on 01/29/2014, CEC approved on 02/10/2014. The HTF End Loop Testing procedure was submitted to the CPM on 01/17/2014, CPM approved on 01/27/2014. SBCFD provided comments to the SPCC on 02/13/2014. Comments were addressed and submitted to CPM on 02/28/2014, please see attachment. CPM comments for the PSM plan were addressed and submitted to CPM on 01/27/2014. CPM approved PSM plan on 02/10/2014, please see attachment. HMBP was resubmitted on 03/26/2014 to include the hydrogen and CO2 for the turbine cooling system, CEC approved on 04/16/2014, please see attachments. Submittal for steam generator chemical pipe cleaning procedure submitted to CPM on 04/23/2014. Location map showing storage locations of chemical pipe cleaning chemicals submitted to CPM on 04/25/2014, please see attachments. Conditional approval of Chemical Pipe Cleaning process approved by CEC on 04/29/2014. SBC permit to place baker tanks in Harper Lake Road right-of-way for the chemical pipe cleaning submitted to SBC on 03/17/2014, SBC approval on 03/20/2014. HAZ-2-04-00, the revised Hazardous Materials Business Plan (HMBP) was submitted to CPM on 05/01/2014, CPM approved 05/02/2014, please see attachments.

WASTE-2 [ASI and A/T]

Project owner shall keep a copy of the identification number on file at the project site and provide documentation of the hazardous waste generation notification and receipt of the number to the CPM after receipt of the number. Waste generator number issued by California EPA on September 28, 2012. CEC reviewed and approved submittal on November 27, 2012. The application for the USEPA hazardous waste generation notification number was submitted on July 9. 2013. EPA approval issued on 10/02/2013.

ABENER TEYMA MOJAVE

13911 Park Avenue, Suite 208
Victorville, CA 92392
Phone: 480-287-1419

WASTE-10 [ASI and A/T]

The project owner shall document all releases and spills of HTF as described in Condition of Certification WASTE-9 and as required in the Soil & Water Resources section of this Decision. Cleanup and temporary staging of HTF-contaminated soils shall be conducted in accordance with the approved Operation Waste Management Plan required in Condition of Certification of WASTE-6. The project owner shall sample HTF-contaminated soil in accordance with the United States Environmental Protection Agency's (USEPA) current version of "Test Methods for Evaluating Solid Waste" (SW-846). Samples shall be analyzed in accordance with USEPA Method 1625B or other method to be reviewed and approved by DTSC and the CPM.
Within 28 days of an HTF spill the project owner shall provide the results of the analyses and their assessment of whether the HTF-contaminated soil is considered hazardous or non-hazardous to DTSC and the CPM for review and approval. If DTSC and the CPM determine the HTF-contaminated soil is considered hazardous it shall be disposed of in accordance with California Health and Safety Code (HSC) Section 25203 and procedures outlined in the approved Operation Waste Management Plan required in Condition of Certification WASTE-9 and reported to the CPM in accordance with Condition of Certification WASTE-12. If DTSC and the CPM determine the HTF-contaminated soil is considered nonhazardous it shall be retained in the land farm and treated on-site in accordance with the Waste Discharge Requirements contained in the Soil & Water Resources section of this Decision.
The HTF contaminated soil samples have been submitted to a testing lab. Lab results submitted to the CPM on 04/25/2014 and to DTSC on 05/09/2014, please see attachments. CPM approved on 05/22/2014 and DTSC on 05/09/2014, please see attachments. HTF Spill Reports and summary are attached.

WORKER SAFETY-2

At least 30 days prior to the start of commissioning, the project owner shall submit to the SBCFD the final Operations Fire Prevention Plan and Emergency Action for review and the final Project Operations and Maintenance Safety and Health Program to the CPM for approval.
Health & Safety, Fire Prevention and Emergency Response plans for operations submitted to SBCFD and CPM on 02/14/2014, please see attachments. SBCFD issued comments on 02/26/2014, comments addressed and resubmitted to CPM on 02/26/2014. CPM issued comments on 03/03/2014, package resubmitted on 03/05/2014, please see attachment. CPM approved package on 03/10/2014, please see attachment. CPM clarified its approval of this compliance on 03/25/2014.

ABENER TEYMA MOJAVE

13911 Park Avenue, Suite 208
Victorville, CA 92392
Phone: 480-287-1419

SOIL&WATER-1

Provide an analysis on the effectiveness of the drainage, erosion, and sediment control measures and the results of monitoring and maintenance activities.

Please see the attached Construction Site Stormwater Runoff Control Inspection forms. No rain events occurred on site for the month. All site BMP's functioned accordingly and there was no runoff from the site. The contractor reports as of May 31, 2014 that 0 lf (24,730 lf total for project) of straw rolls and 0 lf (16,219 lf total for project) of new swale have been installed for this month, maintenance required for this month included repair of 25 lf on the north side of Beta east. The existing fiber rolls and swales continued being monitored, maintained, and replaced as needed. The contractor reported that no maintenance of fiber rolls/swales was required for the month. The QSP reports that no sand build-up is prevalent on the straw waddles. These BMP's were effective in preventing sediment run off from the site. There are five concrete washout stations (3 in Alpha and 2 in Beta). Additionally, the steel rumble strips remain in place at the Alpha east main entrance (north), Alpha east (south) entrance, Alpha west entrance, and on Lockhart Road adjacent to the TAB main entrance. They were effective in preventing dirt and mud from being tracked from the site onto Harper Lake Road and Lockhart Road as well as an effective deterrent against the spreading of noxious weeds. The steel beams are continuously maintained to prevent clogging. Street sweeping of the construction entrances and Harper Lake Road and Lockhart Road is occurring on an as needed basis as a means of good housekeeping; it has improved and will continue to be the main activity to keep the streets free of dirt and mud, especially when high winds and storm events occur. Soil stabilizer wasn't used for this month on traffic areas as daily watering was an effective means for dust control. Project site areas for the month that have been stabilized are 0 acres for Alpha East (279.50 acres total), 0 acres in Alpha West (369 acres total), 0 acres in Beta East (502 acres total), and 0 acres in Beta West (102.50 acres total). No sand build-up was reported in the retention basins between collectors. Trash collection was taken care of daily, as AEPC has 12 full time workers dedicated to trash duty. Due to the increase in on site contractors trash has escalated and became a major concern. Notification to the subcontractors to clean up their own trash, especially any accumulating in the trenches, pipes and power block areas has reduced the problem. Sand removal along tortoise fences was done daily. Since the new crews have been on site and new trash policies have been followed, the site has shown vast improvement and is caught up with handling the influx of new workers. Please see attachments, which include the weekly Construction Site Stormwater Runoff Control Inspection forms signed by the project QSP and the Bureau Veritas site inspector.

SOIL&WATER-2

The project owner shall comply with the Waste Discharge Requirements (WDRs) established in Soil and Water Resources Appendices C, D, and E for the construction and operation of the surface impoundments (evaporation ponds), land treatment units, and storm water management system. These requirements relate to discharges, or potential discharges, of waste that could affect the quality of waters of the state, and were developed in consultation with staff of the State Water Resources Control Board and/or the applicable California Regional Water Quality Control Board (hereafter "Water Boards"). It is the

13911 Park Avenue, Suite 208
Victorville, CA 92392
Phone: 480-287-1419

Commission's intent that these requirements be enforceable by both the Commission and the Water Boards. In furtherance of that objective, the Commission hereby delegates the enforcement of these requirements, and associated monitoring, inspection and annual fee collection authority, to the Water Boards. Accordingly, the Commission and the Water Board shall confer with each other and coordinate, as needed, in the enforcement of the requirements. The project owner shall pay the annual waste discharge permit fee associated with this facility to the Water Boards. In addition, the Water Boards may "prescribe" these requirements as waste discharge requirements pursuant to Water Code Section 13263 solely for the purposes of enforcement, monitoring, inspection, and the assessment of annual fees, consistent with Public Resources Code Section 25531, subdivision (c). No later than sixty (60) days prior to any wastewater or storm water discharge or use of land treatment units, the AMS project shall provide documentation to the CPM, with copies to the Lahontan RWQCB, demonstrating compliance with the WDRs established in Appendices C, D, and E. Any changes to the design, construction, or operation of the ponds, treatment units, or storm water system shall be requested in writing to the CPM, with copies to the Lahontan RWQCB, and approved by the CPM, in consultation with the Lahontan RWQCB, prior to initiation of any changes. The AMS project shall provide to the CPM, with copies to the Lahontan RWQCB, all monitoring reports required by the WDRs, and fully explain any violations, exceedances, enforcement actions, or corrective actions related to construction or operation of the ponds, treatment units, or storm water system. SWAT2-01-00, construction plans for the Evaporation ponds and LTU's were submitted to the CEC, Lahontan and CBO on June 6, 2013 and approved by all agencies on June 11, 2013. SWAT2-02-00, a modification to the LTU plans was submitted to the CEC and Lahontan on August 5, 2013, and an approval was issued on August 8, 2013. SWAT2-04-00 for a change in verification was requested by the CEC but AEPC suggested that any change will be covered by the closure compliances, COMPLIANCE-12, -13 and -14. The CEC responded on September 12, 2013 that they were in agreement. SWAT2-03-00, for the monitoring well system was submitted to the CEC and Lahontan the week of 10/28. Abeinsa EPC engineering staff is still coordinating with the CEC and Lahontan on the final design. Abeinsa EPC submitted a well plan for CEC review on 11/27/2013. CEC provided comments to the well plan on 12/17/2013. Revised well plan submitted to the CEC on 12/23/2013, CPM approved on 01/14/2014.

SOIL&WATER-4

Well abandonment status for remaining abandonments submitted to CPM on 09.06.12, As of 09.06.12, the CEC has approved all well abandonments with the exception of wells 11 and 14 (stuck pump wells). They require a wildlife survey in the area of the two wells to ensure that their habitats won't be disrupted with the use of explosives for the stuck pump wells. As of 10.13.2012, the well contractor was able to remove the pump from Well #11 by conventional means. However, Well #2 has now been determined as having a stuck pump and needing explosives to remove. The abandonment package was revised and resubmitted to the CEC on 10.22.2012. CEC has approved the use of explosives on Wells #2 and #14 as of October 31, 2012. As of March 5, 2013, the remaining wells to be abandoned are: Ryken and Wetlands. Wells #2 and #14 (by explosives) and 8, 10, 19, were abandoned during January 2013 but their well completion reports were finalized this month, please see attachments. Ryken and Wetlands wells were approved to be abandoned by SBC on May 7, 2013. Final abandonment was completed on May 17, 2013 and well completion reports were submitted to the CEC for approval. ASI and Abeinsa EPC have agreed on a new location of the Beta #4. An exhibit indicating final production well

13911 Park Avenue, Suite 208
Victorville, CA 92392
Phone: 480-287-1419

locations (including Beta #4) was provided to CPM on 11/27/2013. CPM responded asking for the well design by well contractor that will show a sealed upper layer which prevents any infiltration of the perched layer into the lower aquifer. Well contractor submitted a permit to SBC on 12/07/2013 but decision was made to go with a different contractor. New contractor submitted a permit for the Beta #4 well on 01/14/2014, SBC approved on 01/31/2014 based on the condition that Beta #1 be retrofitted as a monitoring well and the Beta #2 conductor casing be destroyed. The CPM further approved the use of Beta #1 for construction water while Beta #3 construction was completed. CPM approved the Beta #4 permit on 02/04/2014. A request to extend the discharge permit for well test water to the BLM marsh was submitted to CPM on 02/10/2014, CPM approved on 02/12/2014. **Beta #4 continued to be developed during the month, please see attached Beta #4 water usage. Beta #4 well completion report submitted to CPM on 05/22/2014, please see attachment.**

SOIL&WATER-5

Beginning six (6) months after the start of construction, the project owner shall prepare a semi-annual summary report of the amount of water used for construction purposes. The summary shall include the monthly range and monthly average of daily water usage in gallons per day.
For May 2014, 3,114,401 gallons were pumped from Beta #3. Also taken from the overall total was a monthly amount of 204,000 gallons (May) by SBC for off-site road maintenance. The running total of water usage for construction/testing purposes from January 1, 2014 to May 31, 2014 is 19,501,251 gallons. To date, there have been 114 working days for 2014 which equates to 171,064 gal/day. This equates to 3,900,250 gal/month, please see attachments.

SOIL&WATER-6

The project owner shall do all of the following:
1. At least sixty (60) days prior to project construction, the project owner shall submit to the CPM, for review and approval, a comprehensive plan (Groundwater Level Monitoring and Reporting Plan) presenting all the data and information required in Item A above. The project owner shall submit to the both the CPM all calculations and assumptions made in development of the plan.
2. During project construction, the project owner shall submit to the CPM quarterly reports presenting all the data and information required in Item B above. The project owner shall submit to the CPM all calculations and assumptions made in development of the report data and interpretations.
3. No later than sixty (60) days after commencing project operation, the project owner shall provide to the CPM, for review and approval, documentation showing that any mitigation to private well owners during project construction was satisfied, based on the requirements of the property owner as determined by the CPM.
4. During project operation, the project owner shall submit to CPM, applicable quarterly, semi-annual, and annual reports presenting all the data and information required in Item C above. The project owner shall submit to the CPM all calculations and assumptions made in development of report data and interpretations, calculations, and assumptions used in development of any reports.
5. The project owner shall provide mitigation as described in Item D above, if the

13911 Park Avenue, Suite 208
Victorville, CA 92392
Phone: 480-287-1419

CPM's inspection of the monitoring information confirms project-induced changes to water levels and water level trends relative to measured preproject water levels, and well yield has been lowered by project pumping. The type and extent of mitigation shall be determined by the amount of water level decline and site-specific well construction and water use characteristics. The mitigation of impacts will be determined as set forth in Item D above.
6. No later than 30 days after CPM approval of the well drawdown analysis, the project owner shall submit to the CPM for review and approval all documentation and calculations describing necessary compensation for energy costs associated with additional lift requirements.
7. The project owner shall submit to the CPM all calculations, along with any letters signed by the well owners indicating agreement with the calculations, and the name and phone numbers of those well owners that do not agree with the calculations.
8. If mitigation includes monetary compensation, the project owner shall provide documentation to the CPM that compensation payments have been made by March 31 of each year of project operation or, if a lump-sum payment is made, payment shall be made by March 31 of the following year. Within 30 days after compensation is paid, the project owner shall submit to the CPM a compliance report describing compensation for increased energy costs necessary to comply with the provisions of this condition.
9. After the first 5-year operational and monitoring period, and every subsequent 5-year period, the project owner shall submit a 5-year monitoring report to the CPM for review and approval. This report shall contain all monitoring data collected and provide a summary of the findings and a recommendation about whether the frequency of water level measurements should be revised or eliminated.
10. During the life of the project, the project owner shall provide to the CPM all monitoring reports, complaints, studies, and other relevant data within 10 days of being received by the project owner.

Fourth quarter water quality report submitted to CPM on 03/28/2014 CPM provided comments, report resubmitted on 04/25/2014.

SOIL&WATER-9

Prior to the start of construction of the sanitary waste system, the project owner shall submit to the County of San Bernardino for review and comment, and to the CPM for review and approval, plans for the construction and operation of the project's proposed sanitary waste septic system and leach field. These plans shall comply with the requirements set forth in County of San Bernardino Code Title 3, Division 3, Chapter 8 Waste Management, Article 5, Liquid Waste Disposal and Title 6, Division 3, Chapter 3, and the Uniform Plumbing Code. Project construction shall not proceed until the CPM has approved the plans. The project owner shall remain in compliance with the San Bernardino County code requirements for the life of the project.

The septic plans were submitted to CEC on 04/03/2012 for review and approval. CEC approved on 04/23/2012. Plans were resubmitted to SBC on 12/16/2013 to include the addition of the sanitary lift station, comments received regarding the addition and reason for the sanitary lift station, package resubmitted to SBC on 02/19/2014, SBC approved on 02/20/2014. Plans were submitted to CPM on 02/28/2014, CPM approved on 04/23/2014.

ABENER TEYMA MOJAVE

13911 Park Avenue, Suite 208
Victorville, CA 92392
Phone: 480-287-1419

SOIL&WATER-10

The project owner shall obtain a permit to operate a nontransient, non-community water system with the County of San Bernardino at least sixty (60) days prior to commencement of construction at the site. The project owner shall supply updates annually for all monitoring requirements and submittals to County of San Bernardino related to the permit, and proof of annual renewal of the operating permit. To date, potable water system is not installed, thus no monitoring requirements are in effect.
Alpha #1 well permit issued by San Bernardino County on 01/10/2012.
Alpha #2 well permit issued by San Bernardino County on 01/10/2012.
Beta #3 well permit issued by San Bernardino County on 06/04/2012.
Non-transient, non-community water system submitted to SBC on 05/05/2014, please see attachment.

GEN-2

Provide schedule updates in the monthly compliance report.
All engineering disciplines have submitted updated master drawing/spec lists. In addition, the latest construction schedule has been provided. Please see attached copies.

CIVIL-1

At least 15 days (or project owner and CBO approved alternative time frame) prior to the start of site grading the project owner shall submit the documents described above to the CBO for design review and approval. In the next monthly compliance report following the CBO's approval, the project owner shall submit a written statement certifying that the documents have been approved by the CBO.

STRUC-1

Submit to the CPM, in the next monthly compliance report, a copy of a statement from the CBO that the proposed structural plans, specifications, and calculations have been approved and comply with the requirements set forth in applicable engineering LORS.

Struc-1-45.03: Alpha & Beta Water Treatment Building Motor Control Center Room Raised Floor Structural plans submitted to CBO on 04/15/2014, CBO approval on 05/21/2014, please see attachment.

Struc-1-45.03x1: Alpha & Beta Water Treatment Building Motor Control Center Room Raised Floor plans submitted to CBO on 05/23/2014, CBO approval on 05/29/2014, please see attachment.

ABENER TEYMA MOJAVE

13911 Park Avenue, Suite 208
Victorville, CA 92392
Phone: 480-287-1419

Struc-1-77.00: Alpha & Beta Miscellaneous Stair Foundation plans submitted to CBO on 04/25/2014, CBO approved on 05/01/2014, please see attachment.
Struc-1-77.01: Alpha & Beta Miscellaneous Stairs Structure plans submitted to CBO on 04/25/2014, CBO approved on 05/01/2014, please see attachment.
Struc-1-78.00: Alpha & Beta Outdoor SP Transformer Foundation plans submitted to CBO on 04/29/2014, CBO approved on 05/06/2014, please see attachment.

MECH-1

Send the CPM a copy of the transmittal letter.

Mech-1-16.02: Alpha & Beta Expansion Vessel Fire Protection plans submitted to CBO on 08/22/2013, CBO approved on 05/08/2014, please see attachment.
Mech-1-48.00: Alpha & Beta Service testing of water treatment and utility lines submitted to CBO on 04/28/2014, CBO approved on 05/05/2014, please see attachment.

ECN-1

Send the CPM a copy of the transmittal letter in the next monthly compliance report.

ELEC-1

Send the CPM a copy of the transmittal letter in the next monthly compliance report.

Elec-1-14.01x3: One-Line Diagram Panels 22 submitted to CBO on 05/13/2014, CBO approved on 05/20/2014, please see attachment.
Elec-1-14.01x4: One-Line Diagram Panels 26 submitted to CBO on 05/13/2014, CBO approved on 05/20/2014, please see attachment.
Elec-1-14.01x5: One-Line Diagram Panels 27 submitted to CBO on 05/13/2014, CBO approved on 05/20/2014, please see attachment.
Elec-1-14.01x6: One-Line Diagram Panels Misc submitted to CBO on 05/13/2014, CBO approved on 05/20/2014, please see attachment.
Elec-1-25.00x2: One-Line Diagram 5kV Distribution system submitted to CBO on 04/29/2014, CBO approved on 05/06/2014, please see attachment.
Elec-1-29.00x2: Alpha & Beta Electrical Layout for Bldgs 22, 26 & 27 submitted to CBO on 05/05/2014, CBO approved on 05/13/2014, please see attachment.
Elec-1-31.00x1: Alpha & Beta One-Line Diagram Bldg 10 submitted to CBO on 04/30/2014, CBO approved on 05/06/2014, please see attachment.
Elec-1-42.07: Alpha & Beta Temporary Power for Air Compressor submitted to CBO on 05/09/2014, CBO approved on 05/21/2014, please see attachment.
Elec-1-47.00: Alpha & Beta Electrical plans for the Heat Trace Cables submitted to CBO on 04/08/2014, CBO approved on 05/13/2014, please see attachment.
Elec-1-49.00: Alpha & Beta Temporary Power for Admin Bldgs Sewer Liftstation submitted to CBO on 05/09/2014, CBO approved on 05/14/2014, please see attachment.

ABENER TEYMA MOJAVE

13911 Park Avenue, Suite 208
Victorville, CA 92392
Phone: 480-287-1419

TRANS-5 [A/T]

The project owner shall not allow hazardous materials deliveries during non-daylight periods (during both construction and operation) to enhance safety at the rail crossing. A record of hazardous materials deliveries shall be provided to the CPM as required in HAZ-3.
Please see attached Beck Oil delivery lists and HTF delivery list.

TSE-1

Provide schedule updates in the MCR.
Please see attached Electrical Master List.

TSE-4

At least 30 days (or a lesser number of days mutually agreed to by the project owner and the CBO) prior to the start of each increment of construction, the project owner shall submit to the CBO for review and approval the final design plans, specifications and calculations for equipment and systems of the power plant switchyard, outlet line and termination, including a copy of the signed and stamped statement from the responsible electrical engineer attesting to compliance with the applicable LORS, and send the CPM a copy of the transmittal letter in the next Monthly Compliance Report. The following activities shall be reported in the Monthly Compliance Report:
A. Receipt or delay of major electrical equipment;
Please see attached list of receipt of major electrical equipment.
B. Testing or energization of major electrical equipment;
Please see attachments for electrical tests to date.
C. The number of electrical drawings approved, submitted for approval, and still to be submitted.
Please see attached Electrical Master List.

TSE-5

At least 60 days prior to the start of construction of transmission facilities (or a lesser number of days mutually agreed to by the project owner and CBO), the project owner shall submit to the CBO for approval:

A. Design drawings, specifications and calculations conforming with CPUC General Order 95 or NESC, Title 8, Articles 35, 36 and 37 of the "High Voltage Electric Safety Orders", NEC, applicable interconnection standards and related industry standards, for the poles/towers, foundations, anchor bolts, conductors, grounding systems and major switchyard equipment.

B. For each element of the transmission facilities identified above, the submittal package to the CBO shall contain the design criteria, a discussion of the calculation method(s), a sample calculation based on "worst case conditions"7 and a statement signed and sealed by the registered engineer in responsible charge, or other acceptable alternative verification, that the transmission element(s) will conform with CPUC General Order 95 or NESC, Title 8, California Code of Regulations, Articles 35, 36 and 37 of the, "High Voltage Electric Safety Orders", NEC, applicable interconnection standards, and

ABENER TEYMA MOJAVE

13911 Park Avenue, Suite 208
Victorville, CA 92392
Phone: 480-287-1419

related industry standards.

C. Electrical one-line diagrams signed and sealed by the registered professional electrical engineer in responsible charge, a route map, and an engineering description of equipment and the configurations covered by requirements TSE-5 a) through f) above. 7 Worst case conditions for the foundations would include for instance, a dead-end or angle pole.

D. The Special Protection System (SPS) sequencing and timing if applicable shall be provided concurrently to the CPM.

E. A letter stating the mitigation measures or projects selected by the transmission owners for each reliability criteria violation are acceptable,
F. An Operational study report based on the expected or current COD from the California ISO and/or SCE, and
G. A copy of the executed LGIA signed by the California ISO and the project owner.

Submittal of project LGIA sent to CPM on 11/08/2013, CPM approved on 12/02/2013.

TLSN-5

The project owner shall ensure that all permanent metallic objects within the right-of-way of the project-related lines are grounded according to industry standards regardless of ownership.
At least 30 days before the lines are energized, the project owner shall transmit to the CPM a letter confirming compliance with this Condition.
Confirmation letter sent to the CPM on 11/06/2013, CPM approved on 11/07/2013.

VIS-1

Revised Surface Treatment Package was submitted to CPM on 04/14/2014. CPM approved plans on 05/16/2014, please see attachments.

VIS-3

Permanent Lighting plans. Package was submitted to CPM on 05/05/2014. CPM approved plans on 05/05/2014, please see attachment.

Should you have any questions or need any additional information, please do not hesitate to contact me.

Sincerely,

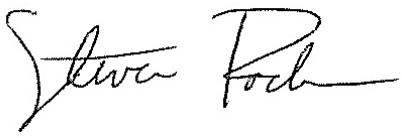

ABENER TEYMA MOJAVE

13911 Park Avenue, Suite 208
Victorville, CA 92392
Phone: 480-287-1419

Steven Pochmara
ABEINSA EPC
13911 Park Avenue, Suite 208
Victorville, CA 92392
Cell: (480) 287-1419

KEY EVENTS LIST

PROJECT: MOJAVE SOLAR PROJECT

DOCKET #: 09-AFC-5

COMPLIANCE PROJECT MANAGER: DALE RUNDQUIST

EVENT DESCRIPTION	DATE
Certification Date	09/2010
Obtain Site Control	
Online Date	
POWER PLANT SITE ACTIVITIES	
Start Site Mobilization	08/2011
Start Ground Disturbance	08/2011
Start Grading	08/2011
Start Construction	08/2011
Begin Pouring Major Foundation Concrete	09/2011
Begin Installation of Major Equipment	07/2012
Completion of Installation of Major Equipment	
First Combustion of Gas Turbine	N/A
Obtain Building Occupation Permit	
Start Commercial Operation	
Complete All Construction	
TRANSMISSION LINE ACTIVITIES	
Start T/L Construction	11/2012
Synchronization with Grid and Interconnection	05/2014
Complete T/L Construction	02/2013
FUEL SUPPLY LINE ACTIVITIES	
Start Gas Pipeline Construction and Interconnection	N/A
Complete Gas Pipeline Construction	N/A
WATER SUPPLY LINE ACTIVITIES	
Start Water Supply Line Construction	01/2013
Complete Water Supply Line Construction	

ABENER TEYMA MOJAVE

LETTER OF TRANSMITTAL

Date: May 27, 2014
Subject: Mojave Solar Project (09-AFC-5C)
Condition Number: AQ-12
Description: **Specifications for the ullage/expansion vent system.**
Submittal No.: AQ-12-01-00
To: Mr. Chris Anderson
Mojave Desert Air Quality
Management District

WE ARE SENDING YOU

Document Name	Title	REV
AQ-12 Cover Letter		
AQ-12 Technical Memorandum HTF Expansion System Basis	HTF Expansion System Basis	0
6007-ESP-ATP-44-62-F206	Specification For Carbon Filters	2
6007-ESP-ATP-44-62-V208	Specification For HTF Scrubbers	1
6007-ESP-ATP-58-62-V200	Specification For HTF Expansion Vessels	2
6007-ESP-ATP-58-62-V200D	Data Sheet (2 of 2) HTF Expansion Vessels mv-205A, B, C.	1

THESE ARE TRANSMITTED as checked below:

☒ For Review

REMARKS _____

COPY TO: File SIGNED BY: _____

Vernon D. Leeming
Permitting Engineer
ABEINSA EPC

ABENER TEYMA MOJAVE

Cover Letter

Date:	May 27, 2014
Subject:	Mojave Solar Project (09-AFC-5C)
Condition Number:	AQ-12
Description:	**Specifications for the ullage/expansion vent system.**
Submittal No.:	AQ-12 -01-00

Mr. Chris Anderson
Mojave Desert Air Quality
Management District.
Permitting Department
14306 Park Ave
Victorville CA 92392
canderson@mdaqmd.ca.gov

Dear Mr. Anderson,

In compliance with AQ-12 we are submitting the Specifications for the ullage/expansion vent system of the Mojave Solar Project for your review.

For your convenience, we are including the Compliance language below:

AQ-12 The ullage/expansion system nitrogen venting shall be carried out only through ~~vents which have vapor condensing coolers which shall be maintained at or below 120 degrees Fahrenheit.~~ **District permit numbers C012015 and C012016.**

Verification: The project owner shall provide the District and CPM manufacturer design specifications showing compliance with this condition at least 30 days prior to the installation of the ullage/expansion vent system. ~~The project owner shall have active temperature gauges that can be inspected to show compliance with this condition.~~

Should you have any questions or comments, please don't hesitate to contact me.

COPY TO: File SIGNED BY:

Vernon D. Leeming
Permitting Engineer
ABEINSA EPC

ABENER TEYMA MOJAVE

Technical Memorandum

Date:	May 27, 2014
Subject:	Mojave Solar Project (09-AFC-5C)
Condition Number:	AQ-12
Description:	**HTF Expansion System Basis – (Ullage System and Emissions Description - Final - Revised 04-05-13)**
Submittal No.:	AQ-12 -01-00

HTF Expansion System Basis

The heat transfer fluid (HTF) will be Therminol VP-1, produced by Solutia, Inc., which is comprised of diphenyl oxide (73 - 73.5%) and biphenyl (26.5 - 27%). This material in gaseous form represents VOCs. As the HTF is normally cycled from 422 ˚F to 740 ˚F every day, there will be some degradation of the HTF. This degradation will result in primarily benzene and phenol with smaller concentrations of toluene and naphthalene. These degradation products will affect the thermal efficiency of the HTF and increase vapor pressure. Benzene is classified as a hazardous air pollutant (HAP) and the plant's ullage system design basis is to limit the amount of benzene released to the atmosphere, as well as limit the overall VOC emissions. Both benzene and VOC emissions are expected to be below the allowable threshold as currently permitted.

Based on Solutia's simulations and lab/field tests, daily degraded low boilers are calculated to be approximately 128.6 lbs/day per plant (257.1 lbs/day for both plants).

The Mojave project has two identical Alpha and Beta plants. The numbers on the following flow diagram are representative of a single plant and the total project site is expected to have twice the numbers listed on the diagram. The HTF system of each plant will consist of 4 vertical ASME-rated expansion vessels, one horizontal ASME rated condensate receiver vessel, one ullage condenser, two ullage scrubbing units, two sets of activated carbon filters, and two vertical HTF overflow tanks.

These expansion vessels and the condensate receiver vessels will be sized such that during normal operation, the expansion of the HTF will: first, allow the nitrogen / vapor space pressure to increase from 8 bara to 12 bara nominally; and second, vent the volume of vapor space equivalent to the remaining expansion of the HTF to operating temperature, through the ullage system. However, after filling all pipes initially at ambient temperature (with high density – lower specific volume), the expansion of the HTF from the ambient temperature to the daily operating temperatures will push the HTF that is not needed in the system during daily operation into two overflow tanks that will be kept cooler (at about 150 ˚F) and blanketed with 2-15 inches Water Column (in. WC) of nitrogen.

During daytime operation, when the HTF is heated and expands, the expanded volume will move into the expansion vessels and the nitrogen will be compressed until the pressure reaches 12 bara, upon which any additional volume expansion will push the equivalent volume of vapor space through the ullage system. This additional volume being vented will be condensed in a nitrogen ullage condenser, stored in the pressurized, horizontal condensate receiver vessel, and pumped back into the system. At night, when the HTF cools and contracts, the HTF will move back into the system piping and allow the vapor

space pressure to lower to 8 bara before nitrogen is added to the expansion vessels to maintain this overnight pressure.

After some time of operation, the HTF will begin to break down into Low Boilers (LB's) such as Benzene, Toluene, Phenol, etc.; and High Boilers (HB's) – heavier sludge. After several years of operation, these HB's and LB's may accumulate to high enough concentrations that they may need to be removed from the system.

Although venting is reduced by letting the nitrogen space pressure rise and fall, the LB's and HTF (Therminol) which will be released into the vapor space at operating temperature will be removed from the nitrogen space by cooling and condensing them in the nitrogen ullage condenser to 120 ˚F. The concentration of LB's and HTF in the vent stream will be further reduced by sending the stream through a scrubber against a cooled liquid HTF flow, at 117 ˚F. Any residual LB's and HTF remaining in the vapor stream exiting the scrubber will be sent to a carbon filter system for further reduction before venting to the atmosphere.

Types of Venting

There are two types of venting from the HTF system:

- the venting of nitrogen due to HTF overflow tank breathing
- the daily venting of vapor space due to HTF expansion into the expansion vessels.

Overflow Tank Venting: As indicated above, during most normal operation, there will be no exchange of HTF or nitrogen between the expansion vessels and the overflow tanks. However, during the winter months when the HTF temperature drops below the normal daily range, some of the HTF in the overflow tanks may need to be transferred into the expansion vessels to maintain the minimum expansion tank's level. During these conditions, the overflow tank levels may fall and rise, thus requiring nitrogen space venting.

The worst case would be if the HTF system became very cold (limited to 120 ˚F) after a few days of no sun, in which case all the HTF from the overflow tanks would be pumped back into the system. The next time the system is brought back to normal operation, all of the HTF that was pumped out of the overflow tanks would return to the overflow tanks. Under that condition, the total amount of nitrogen vented is calculated to be 24,731 cu ft total for both plants.

The overflow tanks have vent scrubbers on their stacks before feeding into the carbon filters. Nitrogen and HTF mixture to be released passes through these scrubbers where it is cooled to 117 ˚F by the cooled liquid HTF stream flowing countercurrent. This overflow tank vent scrubber will condense most of the HTF vapor vented from the overflow tanks before reaching the carbon filters. The overflow tanks have a design temperature of 350 ˚F, but the worst case vapor space temperature has been calculated to be around 250 ˚F. The overflow tanks are designed to be maintained at 150 ˚F to minimize HTF venting but at the same time be sufficiently higher than the heat tracing (electric heating) initiation temperature of 120 ˚F. The HTF overflow tank has a liquid HTF cooler to maintain this tank's temperature at 150 ˚F.

Expansion Vessel Venting: As the HTF expands and contracts daily into and out of the expansion vessels, the LB's along with some vaporous HTF will be released into the vapor space. To help this separation of LB's into the vapor space, a side stream of HTF will also be sprayed to the top of the expansion vessels continuously. As the expansion vessels fill up with HTF, the nitrogen space is compressed until the pressure reaches 12 bara, upon which the vent valve opens and allows any further expansion to force the vapor space through the ullage system. The nitrogen + vapors will be pushed through the nitrogen ullage condenser, where most of the HTF and low boiler degradation products will be condensed and collected in the low boiler condensate receiver vessel. The nitrogen and other non-condensable constituents will pass through the expansion vessel vent scrubber where the 117 ˚F, countercurrent liquid HTF flow will bring even more HTF and low boilers into the liquid phase. The nitrogen, degradation products, and vaporous HTF remaining in the vapor phase at the exit of the scrubber will enter the carbon filters for further cleaning before venting to the atmosphere.

Low Boilers Removal Scheme: The HTF system is sized to minimize the nitrogen venting due to HTF expansion. On a daily basis, the low boilers and some HTF will be vented from the expansion vessels. Since the vessels are first allowed to pressurize from 8 bara to 12 bara, the amount of nitrogen being vented is reduced and is equivalent to the volume of four expansion vessels from the 27% level to the 72% level (normal operating level), or 45% of the total volume of the four expansion vessels. This vented nitrogen at 12 bar (174 psia) will include small amounts of HTF and HTF degraded by-products, the LB's.

An ASPEN simulation predicted that it is better to condense the low boilers under pressure than to expand the mixture and cool it. The expansion vessel's vent stream is cooled to 120 ˚F at 174 psia through a water-cooled nitrogen ullage condenser. The non-condensable vapors and nitrogen remaining in the vent stream will be passed through the rest of the ullage system for further cleaning before venting to the atmosphere. The condensed HTF along with low boilers will be sent to the low boiler condensate receiver vessel for temporary storage. The condensate stored in the receiver vessel will be pumped back into the main system.

Release Control Efficiency: Expected VOC emissions, per plant, from nitrogen venting are thus 0.47 lb/day HTF with a maximum of 27% or 0.13 lb/day comprised of biphenyl; 1.68 lbs/day of benzene, toluene, and phenol; and 0.02 lb/day high boilers, primarily dibenzofuran. Of this 1.68 lbs/day low boiler venting, 1.39 lbs/day of this is Benzene, which is within the present permit level of 1.9 lbs/day for this HAP venting. The Title V threshold for hazardous air pollutants is 10 tons/year for any individual HAP. So the HTF and benzene release, as calculated, is much less than the maximum allowable level.

Based on the calculations submitted, this control reduces the potential mass of HTF released, per plant, from 4921 lbs/day to 0.47 lbs/day resulting in an overall VOC control efficiency of about 99.99%. These results are outlined on the attached Process Flow Block Diagram.

Based on the above design considerations and system control efficiency, the project is not anticipating the need for any additional add-on VOC controls.

Emissions Summary

Therefore, the HTF overflow and expansion venting system will result in VOC (HTF plus low boiler and high boiler compounds) emissions on the order of 9.45 lbs/hr, 4.33 lbs/day (based on 40 minutes/day of expansion vessel venting and 20 minutes/day of overflow tank venting), 1,581 lbs/year, or 0.791 tpy for the entire facility. VOC emissions for a single power block would be approximately 4.73 lbs/hr, 2.17 lbs/day (based on 40 minutes/day of expansion vessel venting and 20 minutes/day of overflow tank venting), 791 lbs/yr, or 0.395 tpy. The VOC emissions is broken down by component in the table shown on the next page and the values for the HTF overflow and expansion venting emissions represents the emissions for a single power block. The most stringent permitted value is for the Benzene emissions, which is permitted at an HAP emission level of 1.9 lbs/day. With 95% efficient carbon filters, the Benzene emissions will be 3.06 lbs/hr, 1.39 lbs/day, 506.79 lbs/yr, or 0.253 tpy per power block.

HTF VOC fugitive emissions from valves, flanges, pumps, seals, etc., will be 1.34 lbs/hr, 21.33 lbs/day, 7,784 lbs/year, or 3.89 tpy, based on the data and assumptions in the VOC Component Count and Emissions spreadsheet attached at the end of this report.

The following table includes a breakdown of emissions on a component basis for both the HTF overflow and expansion venting emissions and HTF fugitive emissions and the values listed in the table represent values for a single power block:

Compound	HTF Overflow and Expansion Venting Emissions					HTF Fugitive Emissions			
-	lbs/hr Maximum	lbs/day Normal Annual Average	lbs/day Maximum	lbs/yr	tons/yr	lbs/hr	lbs/day	lbs/yr	tons/yr
Diphenyl ether	0.73	0.34	0.69	125.09	0.063	0.87	13.87	5,062	2.53
Biphenyl	0.27	0.13	0.25	46.27	0.023	0.31	5.00	1,824	0.91
Benzene (HAP)	3.06	**1.39**	2.78	506.79	0.253	0.03	0.43	156.69	**0.08**
Toluene	0.11	0.05	0.10	18.74	0.009	0.00	0.05	19.18	0.01
Phenol	0.52	0.24	0.48	87.34	0.044	0.03	0.52	188.76	0.09
"Dibenzo" (High Boilers)	0.04	0.02	0.03	6.33	0.003	0.09	1.46	533.77	0.27
VOC	4.73	**2.17**	4.33	790.56	0.395	1.34	21.33	7,784	3.89

Waste hauling (total load-out emissions for the 250 MW facility), when needed (initially it is not expected to be needed for several years) will be approximately 0.0013 lbs/hr, 0.0013 lbs/day, 0.0157 lbs/yr, or 7.84E-6 tpy. These emissions are based on the following data and assumptions:

a) 12 facility load-outs per year (1 per month) maximum.

b) 2 hours per load-out (1 hour at each power block). The actual load-out pumping or transfer time will be less than an hour, but an hour was used as the basic emission period.

c) VOC emissions loss rate is ~0.0013 lbs/hr (based upon the haul truck evacuated vapor space volume and VOC concentration in the vapor per facility load-out).

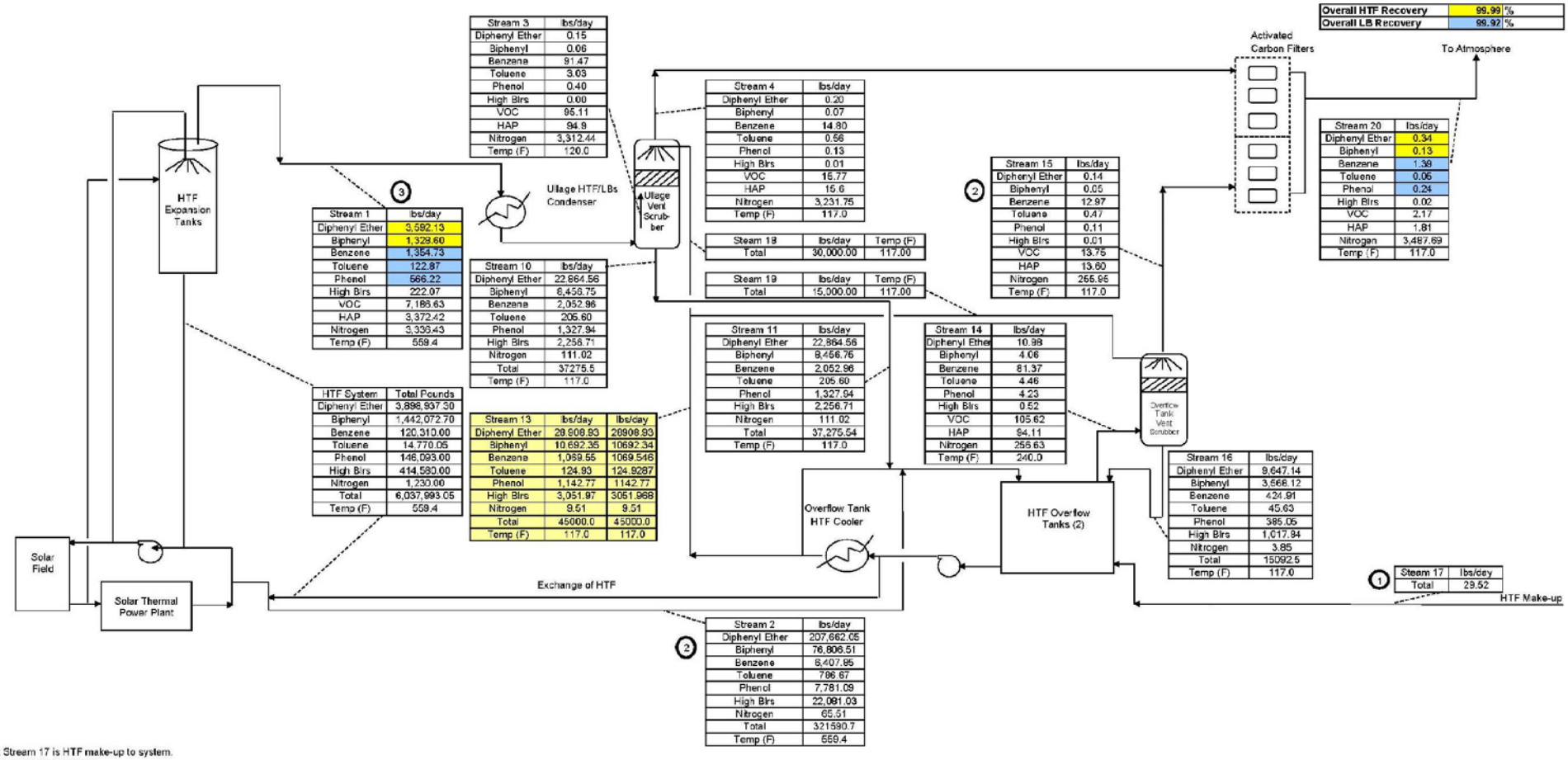

Overall HTF Recovery	99.99	%
Overall LB Recovery	99.92	%

Stream 3	lbs/day
Diphenyl Ether	0.15
Biphenyl	0.06
Benzene	91.47
Toluene	3.03
Phenol	0.40
High Blrs	0.00
VOC	95.11
HAP	94.9
Nitrogen	3,312.44
Temp (F)	120.0

Stream 4	lbs/day
Diphenyl Ether	0.20
Biphenyl	0.07
Benzene	14.80
Toluene	0.56
Phenol	0.13
High Blrs	0.01
VOC	15.77
HAP	15.6
Nitrogen	3,231.75
Temp (F)	117.0

Stream 20	lbs/day
Diphenyl Ether	0.34
Biphenyl	0.13
Benzene	1.38
Toluene	0.06
Phenol	0.24
High Blrs	0.02
VOC	2.17
HAP	1.81
Nitrogen	3,487.69
Temp (F)	117.0

Stream 15	lbs/day
Diphenyl Ether	0.14
Biphenyl	0.05
Benzene	12.97
Toluene	0.47
Phenol	0.11
High Blrs	0.01
VOC	13.75
HAP	13.60
Nitrogen	255.96
Temp (F)	117.0

Stream 1	lbs/day
Diphenyl Ether	3,592.13
Biphenyl	1,328.60
Benzene	1,354.73
Toluene	122.87
Phenol	586.22
High Blrs	222.07
VOC	7,186.63
HAP	3,372.42
Nitrogen	3,339.43
Temp (F)	559.4

Stream 18	lbs/day	Temp (F)
Total	30,000.00	117.00

Stream 19	lbs/day	Temp (F)
Total	15,000.00	117.00

Stream 10	lbs/day
Diphenyl Ether	22,864.56
Biphenyl	8,456.75
Benzene	2,052.96
Toluene	205.60
Phenol	1,327.94
High Blrs	2,256.71
Nitrogen	111.02
Total	37275.5
Temp (F)	117.0

Stream 11	lbs/day
Diphenyl Ether	22,864.56
Biphenyl	8,456.75
Benzene	2,052.96
Toluene	205.60
Phenol	1,327.94
High Blrs	2,256.71
Nitrogen	111.02
Total	37,275.54
Temp (F)	117.0

Stream 14	lbs/day
Diphenyl Ether	10.98
Biphenyl	4.06
Benzene	81.37
Toluene	4.46
Phenol	4.23
High Blrs	0.52
VOC	105.62
HAP	94.11
Nitrogen	255.63
Temp (F)	240.0

HTF System	Total Pounds
Diphenyl Ether	3,898,937.30
Biphenyl	1,442,072.70
Benzene	120,310.00
Toluene	14,770.05
Phenol	146,093.00
High Blrs	414,580.00
Nitrogen	1,230.00
Total	6,037,993.05
Temp (F)	559.4

Stream 13	lbs/day	lbs/day
Diphenyl Ether	20908.93	20908.93
Biphenyl	10692.35	10692.34
Benzene	1069.55	1069.546
Toluene	124.93	124.9287
Phenol	1142.77	1142.77
High Blrs	3051.97	3051.968
Nitrogen	9.51	9.51
Total	45000.0	45000.0
Temp (F)	117.0	117.0

Stream 16	lbs/day
Diphenyl Ether	9,647.14
Biphenyl	3,566.12
Benzene	424.91
Toluene	45.63
Phenol	385.05
High Blrs	1,017.84
Nitrogen	3.85
Total	15092.5
Temp (F)	117.0

Stream 17	lbs/day
Total	29.52

Stream 2	lbs/day
Diphenyl Ether	207,662.05
Biphenyl	76,806.51
Benzene	6,407.85
Toluene	786.67
Phenol	7,781.09
High Blrs	22,091.03
Nitrogen	65.51
Total	321590.7
Temp (F)	559.4

Note 1: Stream 17 is HTF make-up to system.
Note 2: Occurs in 20 minutes.
Note 3: Occurs in 40 minutes.
Note 4: VOCs are comprised of Diphenyl Ether, Biphenyl, Benzene, Toluene, Phenol, and High Boilers.
Note 5: HAPs are comprised of Biphenyl, Benzene, Toluene, and Phenol.

Permit DESIGN (PFD)
Vent to Activated Carbon (AC)

Process Flow Block Diagram - Vent Scrubbing System - Mojave
FINAL VALUES FOR MOJAVE
PERMIT CASE

Process Flow Block Diagram - Vent Scrubbing System - Mojave
FINAL VALUES FOR MOJAVE
PERMIT CASE

Process Flow Block Diagram - Vent Scrubbing System - Mojave
FINAL VALUES FOR MOJAVE
PERMIT CASE

Process Flow Block Diagram - Vent Scrubbing System - Mojave
FINAL VALUES FOR MOJAVE
PERMIT CASE

HTF System Component Count and Fugitve Emissions Estimate

Component	Count #	Service	EF lb/hr/src	Hrs/day	lbs/hr	lbs/day	lbs/yr	tons/yr
Valves								
Sealed Bellows/**Flex Hoses**	**4843**	Gas/Vapor & Lt. Liquid	0	24	0.000	0.000	0.000	0.000
	0	Gas Vapor	0	0	0.000	0.000	0.000	0.000
Non-Bellows Sealed	**356**	Lt. Liquid	0.000555	16	0.198	3.160	1153.417	0.577
		Hvy. Liquid	0.000019	8	0.007	0.054	19.743	0.010
Pumps								
Sealess Type	0	Lt. Liquid	0	0	0.000	0.000	0.000	0.000
Double Mech Seals or Equivalent	**20**	Lt. Liquid	0.00186	16	0.037	0.589	215.076	0.108
		Hvy. Liquid	0.000053	8	0.001	0.008	3.064	0.002
Single Mech Seal	0	Hvy. Liquid	0	0	0.000	0.000	0.000	0.000
Compressors	0	Gas/Vapor	0	0	0.000	0.000	0.000	0.000
Flanges/Connectors	**448**	Lt. Liquid	0.0000165	16	0.007	0.118	43.193	0.022
		Hvy. Liquid	0.0000165	8	0.007	0.059	21.597	0.011
PRVs	**11**	Gas	0.0985	16	1.084	17.336	6327.640	3.164
	19	Hvy. Liquid	0.000019	8	0.000	0.002	0.610	0.000
Process Drains	0	All	0	0	0.000	0.000	0.000	0.000
Open-ended Lines	0	Lt. Liquid	0.003307	0	0.000	0.000	0.000	0.000
				Totals	1.34	21.33	7784.34	3.89
Operating Days/Yr:	365							

Notes:
(1) The component counts listed above are the actual number of each component purchased as of 04/05/2013, with a 10% margin.
(2) The Emission Factor (EF) values listed above and guidance for light liquid vs. heavy liquid operating hours came from the following source: CEC, Supplemental Staff Assessment - Part B, Abengoa Mojave Solar, May 2010, 09-AFC-5, CEC-700-2010-003-SUPB.

ABENER TEYMA
MOJAVE

Specification For Carbon Filters	Job No.: 120010	Spec. No.: 6007-ESP-ATP-44-62-F206
	Item No.: See Spec	No. Req'd.: See spec
	Project: Mojave	
	Ref.:	Issue: 1 Dated : 11/28/12

Instructions:

1. Initialing (By/Chk'd/App'd) required on cover sheet only. All other title block information must be included on all pages.

2. Revisions are identified in the body of the Specification.

Rev. No.	Date	By	Chk'd	App'd	Description of Revision Including Page Numbers
0	29 Mar 2012	WMP	MZA	APF	Issued For Quotes
1	13 Nov 2012	JS	MZA	APF	Re-issued For Quotes
2	**28 Nov 2012**	**JS**	MZA	APF	**Issued for Purchase**

2	11/27/2012	Issue for Purchase	JS	MZA	APF	
1	11/13/2012	Re-issued for Bid	JS	MZA	APF	
0	3/29/12	Issued for Bid	WMP	MZA	APF	
No.	Date	Description	By	Chk'd	App'd	App'd

Information and know-how hereon are confidential and proprietary property of Abener Teyma Mojave General Partnership and may not be used, reproduced, or revealed to others except in accordance with the terms of a contract with or other written permission of Abener Teyma Mojave General Partnership.

Specification For Carbon Filters				
	Job No.: 120010		Spec. No.:	6007-ESP-ATP-44-62-F206
	Item No.: See Spec		No. Req'd.:	See spec
	Project: Mojave			
	Ref.:	Issue: 1	Dated :	11/28/12

1. Project Summary

1.1 The project consists of two, 140 MW, parabolic trough solar power plants, referred to as Alpha Plant and Beta Plant. The plants will be built on adjacent sites in an unincorporated area of San Bernardino County near Hinkley, California. The plant sites are located approximately six miles north of highway CA-58 on Harper Lake Road, approximately 20 miles west of Barstow.

1.2 The Vendor shall furnish carbon filters for each plant site meeting the requirements set forth in this specification. This specification covers the minimum requirements for the performance, design, materials, fabrication, testing and delivery of the filters.

2. General

2.1 The attachments identified in this document are considered to be part of this specification. Attached specifications shall be met and followed by the Vendor in full. All drawings and documents included in this package are considered "Contract Documents".

2.2 Definitions

a. "Vendor" shall mean **"Condorchem Envitech"** for which this specification is intended.
b. "Engineer", "Purchaser" or "Customer" shall mean the "Abener Teyma Mojave General Partnership".
c. "Owner" shall mean "Mojave Solar LLC".
d. "Construction Manager" or "Construction Superintendent" shall mean "Abener Teyma Mojave General Partnership".

2.3 The imperative language of this specification is directed to the Vendor, unless specifically noted otherwise. All directives such as "provide", "perform", "test", etc., are addressed solely to Vendor, whether or not the word "Vendor" is specifically mentioned. Work by Others will be specifically identified.

Information and know-how hereon are confidential and proprietary property of Abener Teyma Mojave General Partnership and may not be used, reproduced, or revealed to others except in accordance with the terms of a contract with or other written permission of Abener Teyma Mojave General Partnership.

Specification For Carbon Filters	Job No.: 120010	Spec. No.: 6007-ESP-ATP-44-62-F206
	Item No.: See Spec	No. Req'd.: See spec
	Project: Mojave	
	Ref.:	Issue: 1 Dated : 11/28/12

3. Function

The carbon filters will be used to minimize the emission of volatile organic compounds (VOCs) and hazardous air pollutants (HAPs) to the atmosphere. The VOC emissions will be Heat Transfer Fluid (HTF) vapors (di-phenyl ether and biphenyl) and its degradation products including, benzene, toluene, and phenol in nitrogen vented from the HTF Overflow Tanks and the HTF Expansion Vessels.

4. Operation

The HTF vapors and nitrogen will be displaced from the HTF Overflow Tanks and HTF Expansion Vessels due to thermal expansion of the HTF as it is warmed to operating temperatures each day. The HTF system will be vented as needed to control the maximum system pressure. The HTF Overflow Tank vent gases will pass through a HTF Scrubber prior to entering the filter. The HTF expansion vessel vent gases will pass through an ullage cooler, condensate receiver and a HTF Scrubber prior to entering the filter. The HTF Overflow Tanks will vent for approximately 20 minutes per day, when required. The HTF Expansion Vessel will vent approximately 40 minutes each day. The venting from the overflow tanks and the expansion vessels will be sequential and not simultaneous.

5. Location

5.1 The filters shall be installed outdoors. For proposal purposes, assume the filters will be on a concrete foundation at grade.

5.2 Electrical Area Classification - The filters will be installed in an area that is classified as a Class I Division 2 location per NEC 500.5 (Classification of Locations).

5.3 The equipment shall be designed to meet all design and climatic conditions set forth in this specification. Refer to specification 6007-ESP-ATP-00-60-G100 Project Design Criteria, for site specific information.

2	11/27/2012	Issue for Purchase	JS	MZA	APF	
1	11/13/2012	Re-issued for Bid	JS	MZA	APF	
0	3/29/12	Issued for Bid	WMP	MZA	APF	
No.	Date	Description	By	Chk'd	App'd	App'd

Information and know-how hereon are confidential and proprietary property of Abener Teyma Mojave General Partnership and may not be used, reproduced, or revealed to others except in accordance with the terms of a contract with or other written permission of Abener Teyma Mojave General Partnership.

6. Schedule

The vendor shall propose the best available delivery. Vendor's schedule shall comply with the Abener Teyma project schedule.

7. Scope

7.1 Vendor shall design, fabricate, assemble, inspect, test, pack and ship the carbon filters as specified herein.

7.2 Vendor shall furnish four sets of carbon filters; one set for the Alpha plant and one set for the Beta plant. The general arrangement will be two vessels installed in parallel, one for low pressure stream (Overflow Tanks) and one for high pressure stream (Expansion Vessels) per plant.

Equipment Name	Tag Number	Plant Site	Quantity
Carbon Filter	A-MF-206 A	Alpha	1
Carbon Filter	A-MF-206 B	Alpha	1
Carbon Filter	A-MF-206 C	Alpha	1
Carbon Filter	A-MF-206 D	Alpha	1
Carbon Filter	B-MF-206 A	Beta	1
Carbon Filter	B-MF-206 B	Beta	1
Carbon Filter	B-MF-206 C	Beta	1
Carbon Filter	B-MF-206 D	Beta	1

7.3 The vendor will provide the following:

a. Filter vessels
b. Vessel nozzles
c. Manways
d. Piping, **valves,** and distribution manifolds within the vessels
e. Supports for internal components
f. Vessel support legs and seismic restraints
g. Anchor bolt design
h. Grounding lugs

Information and know-how hereon are confidential and proprietary property of Abener Teyma Mojave General Partnership and may not be used, reproduced, or revealed to others except in accordance with the terms of a contract with or other written permission of Abener Teyma Mojave General Partnership.

i. Filter media, (1st fill)
j. Start up and commissioning spare parts (Quote as a separate line item.)
k. Spare parts for one year of operation (Quote as a separate line item.)
l. Other items as specified on the Equipment Data Sheets
m. Rupture Disk Alarm for PSV
n. Inlet ductwork for 2 vessels with 2 wafer valves
o. Outlet ductwork for 2 vessels with 2 wafer valves
p. Two test ports for each carbon filter sets (inlet and outlet)
q. Four vessel support legs
r. Lifting Lugs
s. Spiral Wound Gaskets
t. 4 load cells complete with high speed digital weight indicator and mounting accessories
u. Pressure/vacuum safety valve (Rupture disk and spare for startup)
v. Ladder and inspection platform
w. Pressure transmitters for inlet and outlet for each filter sets
x. Junction boxes
y. Flanges

7.4 Vendor Data

The Vendor shall furnish the Vendor Submittal Data for the Carbon Filters as specified here-in. Refer to specification 6007-ESP-ATP-44-62-F206V for additional Vendor Data Requirements.

7.5 Work By Others

The following is out of the scope of this specification:
a. Receiving, unloading, storage and handling of the filters on site
b. Installation of the filters
c. Foundations
d. Furnishing and installation of anchor bolts
e. Piping prior to the inlet flange of the filters and after the outlet flange of the filters
f. Interconnecting piping between the filter vessels

2	11/27/2012	Issue for Purchase	JS	MZA	APF	
1	11/13/2012	Re-issued for Bid	JS	MZA	APF	
0	3/29/12	Issued for Bid	WMP	MZA	APF	
No.	Date	Description	By	Chk'd	App'd	App'd

Information and know-how hereon are confidential and proprietary property of Abener Teyma Mojave General Partnership and may not be used, reproduced, or revealed to others except in accordance with the terms of a contract with or other written permission of Abener Teyma Mojave General Partnership.

g. Supply of any required utilities to the filters.

8. Performance

8.1 The vendor supplied equipment shall meet the performance requirements defined in this specification and under the column marked "Abener Teyma Requirement" on the Data Sheets; included herein.

8.2 The vendor shall provide with his quotation guaranteed final vent values for Benzene and Toluene at the design flow rate.

8.3 The vendor shall provide with his quotation the "expected" final vent values for all the gas constituents at the design flow rate.

8.4 Vendor shall have sole responsibility for meeting the performance requirements. Vendor shall provide all equipment, appurtenances, and accessories required in order to meet this performance.

8.5 The vendor shall determine the optimal filter design including; vessel arrangement, vessel dimensions, filter media, media depth, and gas distribution system to meet these requirements.

8.6 The filters (including any auxiliaries) shall be designed and constructed for a minimum service life of 30 years.

8.7 The vendor shall provide with his quotation the expected life of the filter media.

9. Codes and Standards

9.1 At a minimum all applicable portions of the codes and standards listed below shall be followed.

a. AISI – American Iron and Steel Institute
b. ANSI – American National Standards Institute
c. ASME – American Society of Mechanical Engineers
d. ASTM – American Society of Testing Materials

Information and know-how hereon are confidential and proprietary property of Abener Teyma Mojave General Partnership and may not be used, reproduced, or revealed to others except in accordance with the terms of a contract with or other written permission of Abener Teyma Mojave General Partnership.

e. AWS – American Welding Society
f. CAL/OSHA – California Occupational Safety and Health Administration
g. CBC – California Building Standards Code (2010)
h. EPA – Environmental Protection Agency
i. NEC – National Electric Code
j. NFPA – National Fire Protection Association
k. OSHA – Occupational Safety and Health Act
l. SSPC – The Society for Protective Coatings

9.2 Vendor shall meet all federal, state, and local laws and regulations.

9.3 Should there be any conflict between applicable codes, standards, specifications noted herein or vendor's recommendations and those of the locality of the project, the more stringent code shall apply.

10. Design

10.1 General

10.1.1 The vendor shall design the filters to meet the operating conditions and performance requirements set forth in this specification. Any conflicts between the specification, the data sheets and the appropriate codes and standards shall be referred to Abener Teyma for resolution.

10.2 Vessels

10.2.1 The carbon filters, being low pressure vessels, may be non-code vessels and do not require an ASME code stamp.

10.2.2 Vessels shall be designed to withstand internal or external pressure and mechanical loads induced by vessel dead load, process, contents, earthquake, wind and other specified loadings. Wind and earthquake loads shall be in accordance with the Project Design Criteria described in Specification 6007-ESP-ATP-00-60-G001. Load

Information and know-how hereon are confidential and proprietary property of Abener Teyma Mojave General Partnership and may not be used, reproduced, or revealed to others except in accordance with the terms of a contract with or other written permission of Abener Teyma Mojave General Partnership.

combinations must be appropriately considered. Structural / seismic design calculations are required.

10.2.3 All vessels shall have physical dimensions within the allowable limits for shipping, and shall be completely shop fabricated and tested prior to shipping.

10.2.4 Vendor shall furnish the vessels complete as shown on data sheets and as noted herein and shall include all necessary nozzles, blind flanges, studs, nuts, bolts, clips, support brackets, lifting lugs, davits, and gaskets.

10.2.5 The design shall be such to avoid any corrosion of vessel equipment.

10.2.6 The design shall be such to avoid any contamination of the vessel contents once the vessel is put into service.

10.2.7 The layout of weld seams shall be such that it will allow full access for inspection. Circumferential seams shall not be located within a distance of 1-1/2" of any external compression ring, internal ring, support ring, etc. Nozzles and manholes shall not intersect any weld seams, unless approved by Abener Teyma.

10.2.8 Pressure and Vacuum Relief

(1) The vendor shall furnish and install pressure and vacuum relief to protect the vessel from damage due to over pressurization or vacuum.

10.2.9 Nozzles

(1) Vendor to indicate on project drawings the maximum allowable loads on nozzles. Minimum design of nozzles shall be in accordance with specification 6007-ESP-ATP-00-60-G130, Required Allowable Nozzle Loads.

(2) Vendor shall extend nozzles 6 inches beyond the exterior surface of the vessel unless otherwise specified.

Information and know-how hereon are confidential and proprietary property of Abener Teyma Mojave General Partnership and may not be used, reproduced, or revealed to others except in accordance with the terms of a contract with or other written permission of Abener Teyma Mojave General Partnership.

(3) All nozzles shall be flush at the interior surface of the vessel wall, unless otherwise specified.

(4) Nozzle sizes and locations shall be coordinated with Abener engineering prior to fabrication. Abener will review locations and sizes on the submittal drawings.

(5) Vendor shall provide sample ports

10.2.10 Manways

(1) Two (2) manways shall be provided in each vessel for accessing and ventilating the filter interior.

(2) Manways shall be located to provide easy access for maintenance and cleaning of the filter.

(3) Manway covers shall be equipped with hinges or davits and handles to aid in removing and replacing the covers.

10.2.11 Lifting Lugs

(1) Vessels shall include lifting lugs and tailing lugs, designed by vendor, for use in loading, unloading, and field erection of vessel. Empty weight shall be marked on the vessel by using lettering no less than 6 inches high.

10.2.12 Anchor Bolts

(1) Anchor bolts shall be furnished by Abener Teyma as sized and selected by the Vendor. Vendor shall specify bolt material, size, and quantities and provide drawings and loading diagrams for structural design.

Information and know-how hereon are confidential and proprietary property of Abener Teyma Mojave General Partnership and may not be used, reproduced, or revealed to others except in accordance with the terms of a contract with or other written permission of Abener Teyma Mojave General Partnership.

10.2.13 Ground Lugs

(1) Each filter shall include two stainless steel grounding lugs. Grounding lugs shall be a minimum of 3" wide x 3 "tall x ½" thick plates, and shall be made of 304 grade stainless steel. The grounding lugs shall be drilled to match "Burndy Qiklug" type "QA28-2N" which utilizes NEMA bolt spacing. Grounding lugs shall be welded to the vessel support lugs. The lugs shall be oriented so that the holes in the lug are on the vertical centerline.

10.2.14 Vessel Internals

(1) The filter shall be designed to prevent channeling and provide a uniform gas velocity across the filter cross section.

(2) The gas velocity through the filter shall not cause the carbon media to be fluidized.

(3) The maximum pressure drop from the inlet to outlet of the filter set shall not exceed the value listed in the equipment data sheet.

(4) The vendor shall design the filters to allow for complete removal and re-filling of the filter media.

(5) The vendor shall state the maximum allowable gas flow and inlet pressure to the filters.

(6) The vendor shall provide the operator a means of determining the remaining media life.

10.3 Media

Information and know-how hereon are confidential and proprietary property of Abener Teyma Mojave General Partnership and may not be used, reproduced, or revealed to others except in accordance with the terms of a contract with or other written permission of Abener Teyma Mojave General Partnership.

10.3.1 The filter media should be coal based pellet and depth of media shall be by the vendor.

10.3.2 The Vendor shall provide the 1st fill of media for the filters.

10.3.3 The vendor shall provide instructions and on-site supervision of the first media fill and the first media replacement.

10.4 Materials of Construction

10.4.1 All materials shall be new and free from defects.

10.4.2 Materials of construction shall be per the attached data sheet. Where materials of construction are not specified, Vendor shall propose materials for each item as appropriate for the service conditions.

10.4.3 All materials purchased by Vendor shall meet nationally recognized standards unless otherwise approved by Abener Teyma.

10.4.4 All vessel materials shall be compatible with the vessel contents and in accordance with all applicable welding procedures.

10.4.5 Copies of mill test reports for materials shall be provided to Abener Teyma by Vendor.

10.4.6 Asbestos or material containing asbestos shall not be used in the construction or manufacture of the equipment.

10.5 Insulation and Heat Tracing

10.5.1 The filters vessels will not be insulated or heat traced.

10.6 Painting

10.6.1 Vessel exteriors shall be painted per manufactures standard.

Information and know-how hereon are confidential and proprietary property of Abener Teyma Mojave General Partnership and may not be used, reproduced, or revealed to others except in accordance with the terms of a contract with or other written permission of Abener Teyma Mojave General Partnership.

10.7 Nameplate

10.7.1 Permanent stainless steel nameplates shall be fixed to each vessel including, but is not limited to, the following information:

(1) Customers Equipment Number

(2) Customers Equipment Name

(3) Customers PO number

(4) Nominal Diameter

(5) Nominal Overall Length

(6) Empty Weight

(7) Internal Capacity

(8) Design Specific Gravity

(9) Material of Construction

10.7.2 The location of the tag shall be determined during drawing review.

11. Submittals

11.1 Vendor shall provide engineering drawings and calculations for approval prior to the start of fabrication.

11.2 Refer to and comply with specification 6007-ESP-ANC-44-62-F206V, Vendor Data Requirements – Carbon Filters.

11.3 Approval of Vendor's drawings and calculations is limited to verifying general compliance with specifications and design drawings, and does not imply verification of dimensions, quantities, or calculations. Vendor is not relieved from responsibility for accurate dimensioning, equipment sizing, fabrication to required tolerances, and fabrication fit-up.

Information and know-how hereon are confidential and proprietary property of Abener Teyma Mojave General Partnership and may not be used, reproduced, or revealed to others except in accordance with the terms of a contract with or other written permission of Abener Teyma Mojave General Partnership.

11.4 U. S. customary units shall be used on all drawings and calculations.

11.5 Drawings:

11.5.1 A general arrangement drawing shall be furnished for each vessel. The general arrangement drawing shall include:

(1) Overall dimensions of the vessel,
(2) Size and location and orientation of all nozzles and connections,
(3) Size and locations of manways,
(4) Anchor bolt layout,
(5) Required clearances for media replacement and other maintenance access,
(6) Vessel data:
  (i) Empty weight, shipping weight, operating weight, flooded weight
  (ii) Shell dimensions
  (iii) Shell thickness
  (iv) Head style and dimensions
  (v) Head thickness (nominal)
  (vi) Head volume
  (vii) Total volume
  (viii) Maximum and minimum allowable working pressures
  (ix) Materials of construction
(7) Location of the vessel nameplate and the actual data to be inscribed on the name plate.

11.5.2 Vendor shall provide all drawings that are issued for fabrication, sealed by a licensed Professional Engineer who is legally authorized to practice in the State of California.

11.6 Data and Calculations

11.6.1 Design calculations (including lifting attachments and support lugs) made by the Vendor shall be furnished prior to or along with submission of drawings for approval. When calculations are made using a computer, all input data, assumptions, computer program version used, and a summary of the results shall be furnished.

Information and know-how hereon are confidential and proprietary property of Abener Teyma Mojave General Partnership and may not be used, reproduced, or revealed to others except in accordance with the terms of a contract with or other written permission of Abener Teyma Mojave General Partnership.

11.6.2 Vendor shall provide their structural calculation package, sealed by a licensed Professional Engineer who is legally authorized to practice in the State of California.

12. Fabrication

12.1 Any fabrication sub-contracted to others shall require written approval by Abener Teyma.

12.2 All plate and other material used in the execution of this work shall be new and clean stock, free from surface laminations and other physical imperfections.

12.3 The axis of any nozzle on the vessel shell shall be radial and perpendicular to the longitudinal axis of the vessel unless otherwise specified. The axis of any nozzle on the vessel head shall be parallel to the longitudinal axis of the vessel unless otherwise specified. The flange face shall be perpendicular to the nozzle axis. All welds protruding beyond the flange face shall be ground flush.

12.4 Flange bolt holes of shell nozzles shall straddle the axial center line.

12.5 Vendor shall prepare weld end nozzles end face in accordance with ASME B31.3 and ASME B16.25. Abener Teyma shall review each weld end nozzle face prior to protection for shipment. Vendor is to protect each weld end nozzle face against damage during handling and transporting.

12.6 All permanent attachments, stiffeners, clip angles, ring angles, etc., shall be joined to vessels by continuous welding, unless approved otherwise by Abener Teyma.

12.7 Remove all sharp edges and burrs.

12.8 All welds and surfaces shall be free of gouges, pits, cracks or other surface defects.

12.9 All welds and materials discovered to be non-compliant through inspection and/or testing shall be fully repaired at vendor's cost.

Information and know-how hereon are confidential and proprietary property of Abener Teyma Mojave General Partnership and may not be used, reproduced, or revealed to others except in accordance with the terms of a contract with or other written permission of Abener Teyma Mojave General Partnership.

12.10 Fabricated location and orientation of nozzles will be reviewed by Abener Teyma. If there are any discrepancies with project documents, the vendor will make corrections.

12.11 To prevent contamination of the vessel contents, Vendor shall mechanically clean the interior surface of the vessel to remove all weld spatter, scale, rust, filings, dirt, etc., as well as all foreign materials. Vendor shall not commence mechanical cleaning until after all testing has been completed.

13. Inspection

13.1 Abener Teyma (or an inspector on their behalf) reserves the right to inspect the equipment at any time during the course of fabrication. Abener Teyma retains the right to provide personnel to observe all fabrication work within the scope of the contracted work (including testing and inspection). Such individuals shall be afforded full and free access for these purposes, subject to safety and schedule constraints.

13.2 Inspector means Abener Teyma (or an inspector on their behalf).

13.3 Inspector shall have free access, at all reasonable times, to the areas where the work on equipment is being performed. Vendor shall notify Abener Teyma purchasing department in advance (minimum one week) of scheduled vessel testing to allow time for the Inspector to arrange to be at the test site before testing begins.

13.4 Mill and shop inspection shall not release the vendor from responsibility for replacing any defective material and for repairing any defective workmanship that may be discovered in the field

13.5 Vendor shall submit letters of completion to Abener Teyma at least twenty days prior to the requested final inspection date. The equipment must be ready for inspection and the tests run prior to this final inspection request.

Information and know-how hereon are confidential and proprietary property of Abener Teyma Mojave General Partnership and may not be used, reproduced, or revealed to others except in accordance with the terms of a contract with or other written permission of Abener Teyma Mojave General Partnership.

13.6 The cost of all tests due to code requirements or manufacturer's test requirements shall be fully borne by vendor.

13.7 The carbon filter vessels shall be tested for leaks by filling with water.

13.8 A written certification of an acceptable water fill test shall be completed by vendor. The certification shall be forwarded to the individual indicated on the Abener Teyma purchase order.

14. Shipping

14.1 All parts shall be skidded, boxed, or otherwise suitably prepared for shipment to protect against damage while in transit.

14.2 Vendor shall refer to specification 6007-ESP-ATP-00-60-G121 for shipping and preparation requirements.

15. Installation Information

15.1 The Vendor shall specify with quote any detailed installation requirements.

15.2 The Vendor shall include in their quotation one set of any special tools and wrenches required for installation and maintenance.

16. Startup, Training and Field Services

The Vendor shall state all startup, training and field services included in bid, clearly identifying duration, number of people, and specific services provided. The Vendor shall quote any additional assistance on a per diem rate.

Information and know-how hereon are confidential and proprietary property of Abener Teyma Mojave General Partnership and may not be used, reproduced, or revealed to others except in accordance with the terms of a contract with or other written permission of Abener Teyma Mojave General Partnership.

Specification For Carbon Filters	Job No.: 120010	Spec. No.: 6007-ESP-ATP-44-62-F206
	Item No.: See Spec	No. Req'd.: See spec
	Project: Mojave	
	Ref.:	Issue: 1 Dated : 11/28/12

17. Qualifications

The Vendor shall furnish equipment, designs, and materials that have been proven by successful operation for no less than five (5) years. Requests to use untried or unproven equipment, designs, or materials must be approved by the Purchaser in writing prior to incorporation into the purchase order.

18. Warranty:

All components of the purchased system shall be covered under warranty by the Vendor. The Vendor shall troubleshoot and repair any malfunctioning system element at no cost to the Purchaser during the warranty period. Reference commercial documentation for the warranty period and terms conditions.

19. Guarantees:

19.1 Vendor shall guarantee the minimum removal efficiency of Benzene and Toluene through a temperature range from 80° F up to 140°F at the design flow rates.

19.2 Vendor shall guarantee the maximum pressure drops through the filter set during expansion vessel venting and overflow tank venting.

2	11/27/2012	Issue for Purchase	JS	MZA	APF	
1	11/13/2012	Re-issued for Bid	JS	MZA	APF	
0	3/29/12	Issued for Bid	WMP	MZA	APF	
No.	Date	Description	By	Chk'd	App'd	App'd

Information and know-how hereon are confidential and proprietary property of Abener Teyma Mojave General Partnership and may not be used, reproduced, or revealed to others except in accordance with the terms of a contract with or other written permission of Abener Teyma Mojave General Partnership.

20. Proposal Requirements

20.1 Vendor shall furnish a quote for the following equipment and services:

20.1.1 Design, materials, labor, fabrication, testing, inspection, and shipping of the equipment.

20.1.2 All parts and accessories required for complete functional Carbon Filters.

20.1.3 As a separate line item the vendor shall quote the cost of replacement carbon for a period of one year. Usage shall be based on venting of the expansion vessels and overflow tanks once per day as described in the data sheets below.

20.1.4 Submittal of data as required in the Vendor Data Requirements Specification, 6007-ESP-ATP-44-62-F206V.

20.1.5 Start-up, training and commissioning, clearly identifying duration, number of people, and specific services included in bid. The Vendor shall quote any additional assistance on a per diem rate.

20.1.6 Spare parts recommended for startup and commissioning, with quantities. Quote as a separate line item.

20.1.7 Recommended spare parts for two years of operation, with quantities. Quote as a separate line item.

20.1.8 The Vendor shall separately quote one set of any special tools and wrenches required for maintenance. Quote as a separate line item.

20.2 The Vendor's base quotation shall consist of the equipment and services identified herein. Pricing for Purchaser identified options shall be submitted as separate line items. Vendor identified alternatives may be submitted if system improvements and/or cost savings can be realized. Vendor may propose alternate arrangements based on their experience.

Information and know-how hereon are confidential and proprietary property of Abener Teyma Mojave General Partnership and may not be used, reproduced, or revealed to others except in accordance with the terms of a contract with or other written permission of Abener Teyma Mojave General Partnership.

20.3 Vendor shall state their equipment Warranty in the proposal.

20.4 Vendor shall state their Performance Guarantee in the proposal.

20.5 Comments and exceptions to the specification shall be listed in a separate part of the proposal titled "Exceptions to the Specification". All exceptions shall be listed in this section and shall reference the appropriate specification section. No other exceptions will be allowed. After the purchase order is awarded, the Vendor shall be responsible to satisfy all requirements of this specification except for the agreed upon exceptions. Any requirements that are not included with the Vendor's equipment and are in the equipment specification shall be furnished and installed at the Vendor's expense.

20.6 Vendor shall complete and return the Equipment Data Sheets with the proposal. Failure to submit these sheets will result in an incomplete proposal that may not be considered.

20.7 Vendor shall furnish dimensioned envelope drawings with the proposal. Drawing shall show the location of all connections, supports, estimated weights, and other pertinent data.

20.8 Vendor shall provide minimum clearances and access required for maintenance, service and operation of the filter and its components.

21. Attachments

6007-ESP-ATP-44-62-F206V	Vendor Data Requirements – Carbon Filters
6007-ESP-ATP-00-60-G100	Project Design Criteria
6007-ESP-ATP-00-60-G120	Equipment Modeling Vendor Data Requirements
6007-ESP-ATP-00-60-G121	Shipping and Preparation Requirements
6007-ESP-ATP-00-60-G130	Required Allowable Nozzle Loads

Information and know-how hereon are confidential and proprietary property of Abener Teyma Mojave General Partnership and may not be used, reproduced, or revealed to others except in accordance with the terms of a contract with or other written permission of Abener Teyma Mojave General Partnership.

Specification For Carbon Filters	Job No.: 120010	Spec. No.: 6007-ESP-ATP-44-62-F206
	Item No.: See Spec	No. Req'd.: See spec
	Project: Mojave	
	Ref.:	Issue: 1 Dated : 11/28/12

Carbon Filters, MF-206

Data Sheets	Vendor:	
CARBON FILTERS MF-206C	**ABENER / TEYMA REQUIREMENT**	**VENDOR INFORMATION**
TYPE: EXPANSION	Activated Carbon Bed	
DESIGN AND CONSTRUCTION		
Vessel Design Code:	None	ASME VIII DIV 1
Stamp:	Not Required	NOT REQUIRED
Operating Pressure: in H_2O	≤75 to 0	≤75 to 29
Operating Temperature: °F	80 to 120	120
Design Pressure: in H_2O	84	100
Design Temperature: °F	25 to 140	140
Corrosion Allowance, in	**By vendor**	0.02(STAINLESS STEEL)
Number of Filters per Plant Site	By Vendor - (See note 1)	2 in parallel (for expansion)
Filter Vessel Orientation	Horizontal	HORIZONTAL
Vessel Dimensions		
Inside Diameter, in.	By vendor	75
Shell Height, Seam to Seam, in.	By vendor	Length 108
Overall Height, In.	By vendor	128
Head style / Flange height, in.	By vendor/ By vendor	KORBOGGEN
Shell Thickness, in.	By vendor	0.12
Head thickness, in.	By vendor	0.16
Head Volume, Ft^3	By vendor	
Vessel Volume, Ft^3	By vendor	275 (TOTAL)
Vessel Support Legs, Qty.	By vendor	4
Nozzles / Manways	Size / Type / Class	
A - Inlet, in.	By vendor	8/150#
B - Outlet, in.	By vendor	8/150#
C - Media Fill, in	By vendor	20
D - Media Removal, in	By vendor	8
E - Pressure Relief, in	By vendor	3

2	11/27/2012	Issue for Purchase	JS	MZA	APF	
1	11/13/2012	Re-issued for Bid	JS	MZA	APF	
0	3/29/12	Issued for Bid	WMP	MZA	APF	
No.	Date	Description	By	Chk'd	App'd	App'd

Information and know-how hereon are confidential and proprietary property of Abener Teyma Mojave General Partnership and may not be used, reproduced, or revealed to others except in accordance with the terms of a contract with or other written permission of Abener Teyma Mojave General Partnership.

Specification For Carbon Filters	Job No.: 120010	Spec. No.: 6007-ESP-ATP-44-62-F206
	Item No.: See Spec	No. Req'd.: See spec
	Project: Mojave	
	Ref.:	Issue: 1 Dated : 11/28/12

Data Sheets	Vendor:	
CARBON FILTERS MF-206C	**ABENER / TEYMA REQUIREMENT**	**VENDOR INFORMATION**
F1 - Upper Manway, in	24"	20
F2 - Lower Manway, in	30"	NONE
Materials of Construction		
Shell	SA 182 /SS304	SA 182 or similar (AISI304)
Head	SA 182 /SS304	SA 182 or similar (AISI304)
Internal Supports	SA 182 /SS304	SA 182 or similar (AISI304)
Internal Piping	SA 182 /SS304	SA 182 or similar (AISI304)
Media		
Media	Activated Carbon	Activated Carbon
Media Vendor	**By vendor**	CONDORCHEM
Media Type / Designation	**Coal Pellet**	Pellet 4 mm
Depth, in	By vendor	71
Media life (mas flow rate/max concent .)	By vendor	242 days/62 days

2	11/27/2012	Issue for Purchase	JS	MZA	APF	
1	11/13/2012	Re-issued for Bid	JS	MZA	APF	
0	3/29/12	Issued for Bid	WMP	MZA	APF	
No.	Date	Description	By	Chk'd	App'd	App'd

Information and know-how hereon are confidential and proprietary property of Abener Teyma Mojave General Partnership and may not be used, reproduced, or revealed to others except in accordance with the terms of a contract with or other written permission of Abener Teyma Mojave General Partnership.

Specification For Carbon Filters	Job No.: 120010	Spec. No.: 6007-ESP-ATP-44-62-F206
	Item No.: See Spec	No. Req'd.: See spec
	Project: Mojave	
	Ref.:	Issue: 1 Dated : 11/28/12

Carbon Filters, MF-206

Data Sheets	Vendor:	
CARBON FILTERS MF-206C	**ABENER / TEYMA REQUIREMENT**	**VENDOR INFORMATION**
TYPE: OVERFLOW	Activated Carbon Bed	
DESIGN AND CONSTRUCTION		
Vessel Design Code:	None	ASME VIII DIV 1
Stamp:	Not Required	NOT REQUIRED
Operating Pressure: in H_2O	≤29 to 1	≤75 to 29
Operating Temperature: °F	80 to 120	120
Design Pressure: in H_2O	84	100
Design Temperature: °F	25 to 140	140
Corrosion Allowance, in	**By vendor**	0.02(STAINLESS STEEL)
Number of Filters per Plant Site	By Vendor - (See note 1)	2 in parallel (for expansion)
Filter Vessel Orientation	Horizontal	HORIZONTAL
Vessel Dimensions		
Inside Diameter, in.	By vendor	40
Shell Height, Seam to Seam, in.	By vendor	Length 90
Overall Height, In.	By vendor	105
Head style / Flange height, in.	By vendor/ By vendor	KORBOGGEN
Shell Thickness, in.	By vendor	0.12
Head thickness, in.	By vendor	0.16
Head Volume, Ft^3	By vendor	
Vessel Volume, Ft^3	By vendor	57(OTAL)
Vessel Support Legs, Qty.	By vendor	4
Nozzles / Manways	Size / Type / Class	
A - Inlet, in.	By vendor	3/150#
B - Outlet, in.	By vendor	3/150#
C - Media Fill, in	By vendor	20
D - Media Removal, in	By vendor	8
E - Pressure Relief, in	By vendor	2

2	11/27/2012	Issue for Purchase	JS	MZA	APF	
1	11/13/2012	Re-issued for Bid	JS	MZA	APF	
0	3/29/12	Issued for Bid	WMP	MZA	APF	
No.	Date	Description	By	Chk'd	App'd	App'd

Information and know-how hereon are confidential and proprietary property of Abener Teyma Mojave General Partnership and may not be used, reproduced, or revealed to others except in accordance with the terms of a contract with or other written permission of Abener Teyma Mojave General Partnership.

Specification For Carbon Filters				
	Job No.:	120010	Spec. No.:	6007-ESP-ATP-44-62-F206
	Item No.:	See Spec	No. Req'd.:	See spec
	Project:	Mojave		
	Ref.:		Issue: 1	Dated : 11/28/12

Data Sheets	Vendor:	
CARBON FILTERS MF-206C	**ABENER / TEYMA REQUIREMENT**	**VENDOR INFORMATION**
F1 - Upper Manway, in	24"	20
F2 - Lower Manway, in	30"	NONE
Materials of Construction		
Shell	SA 182 /SS304	SA 182 or similar (AISI304)
Head	SA 182 /SS304	SA 182 or similar (AISI304)
Internal Supports	SA 182 /SS304	SA 182 or similar (AISI304)
Internal Piping	SA 182 /SS304	SA 182 or similar (AISI304)
Media		
Media	Activated Carbon	Activated Carbon
Media Vendor	**By vendor**	CONDORCHEM
Media Type / Designation	**Coal Pellet**	Pellet 4 mm
Depth, in	By vendor	51
Media life (mas flow rate/max concent .)	By vendor	63days/15 days

2	11/27/2012	Issue for Purchase	JS	MZA	APF	
1	11/13/2012	Re-issued for Bid	JS	MZA	APF	
0	3/29/12	Issued for Bid	WMP	MZA	APF	
No.	Date	Description	By	Chk'd	App'd	App'd

Information and know-how hereon are confidential and proprietary property of Abener Teyma Mojave General Partnership and may not be used, reproduced, or revealed to others except in accordance with the terms of a contract with or other written permission of Abener Teyma Mojave General Partnership.

Specification For Carbon Filters	Job No.: 120010	Spec. No.: 6007-ESP-ATP-44-62-F206
	Item No.: See Spec	No. Req'd.: See spec
	Project: Mojave	
	Ref.:	Issue: 1 Dated : 11/28/12

Maximum Flow Rate Case

Data Sheets **Vendor:**

CARBON FILTERS MF-206	**ABENER / TEYMA REQUIREMENT**		**VENDOR INFORMATION**	
PERFORMANCE	**Inlet Design**	**Outlet Design**	**Inlet Design**	**Outlet Design**
Expansion Tank Venting				
Total Gas Flow Rate lb/min.	92.89			
Flow Duration, min. /day	40			
Flow Composition, lb/min				
Diphenyl ether	0.0075	By vendor	0.0075	0.0001(*)
Biphenyl	0.0027	By vendor	0.0027	<0.0001(*)
Benzene	0.0908	≤1% of inlet	0.0908	0.0009(**)
Toluene	0.0028	≤1% of inlet	0.0028	<0.0001(**)
Phenol	0.0006	By vendor	0.0006	<0.0001(*)
Nitrogen	92.78	92.78	92.78	92.78
High Boilers	0.0000	By vendor	0.0000	0.0000(*)
Total Low Boilers	0.0942	By vendor	0.0942	0.0009(*)
Total Non-N_2	0.1044	By vendor	0.1044	0.0010(*)
Gas Enthalpy, Btu/lb	10.15	10.15	10.15	10.15
Gas Flow, acfm: (See note 2)	1365.22	By vendor	1365.22	1365.22
Operating Temperature, °F:	120	120	120	120
Operating Pressure, in H_2O:	≤75	1	75-29	ATM
Diff. Pressure @ design flow, in H_2O (Note 3)	≤74		14.8	
Guaranteed VOC Removal	99%		99%	

Notes:

1. Vendor to provide type, size and quantity of filters.
2. ACFM measured at 15 psia and 120 F.
3. Maximum differential pressure across filter set from flange to flange.
4.- (*) Expected/(**)guaranteed

2	11/27/2012	Issue for Purchase	JS	MZA	APF	
1	11/13/2012	Re-issued for Bid	JS	MZA	APF	
0	3/29/12	Issued for Bid	WMP	MZA	APF	
No.	Date	Description	By	Chk'd	App'd	App'd

Information and know-how hereon are confidential and proprietary property of Abener Teyma Mojave General Partnership and may not be used, reproduced, or revealed to others except in accordance with the terms of a contract with or other written permission of Abener Teyma Mojave General Partnership.

Specification For Carbon Filters	Job No.: 120010	Spec. No.: 6007-ESP-ATP-44-62-F206
	Item No.: See Spec	No. Req'd.: See spec
	Project: Mojave	
	Ref.:	Issue: 1 Dated : 11/28/12

Maximum Flow Rate Case

Data Sheets CARBON FILTERS MF-206	Vendor: ABENER / TEYMA REQUIREMENT		VENDOR INFORMATION	
PERFORMANCE	**Inlet Design**	**Outlet Design**	**Inlet Design**	**Outlet Design**
Overflow Tank Venting				
Total Gas Flow Rate lb/min.	14.25			
Flow Duration, min. /day	20			
Flow Composition, lb/min				
Diphenyl ether	0.0105	By vendor	0.0105	0.0001(*)
Biphenyl	0.0038	By vendor	0.0038	<0.0001(*)
Benzene	0.1442	≤1% of inlet	0.1442	0.0014(**)
Toluene	0.0045	≤1% of inlet	0.0045	<0.0001(**)
Phenol	0.0010	By vendor	0.0010	<0.0001(*)
Nitrogen	14.09	14.09	14.09	14.09
High Boilers	0.0001	By vendor	0.0001	<0.0001(*)
Total Low Boilers	0.1497	By vendor	0.1497	0.0015(*)
Total Non-N_2	0.1641	By vendor	0.1641	0.0016(*)
Gas Enthalpy, Btu/lb	15.26	15.26	15.26	15.26
Gas Flow, acfm: (Note 1)	209.35	By vendor	209.35	209.35
Operating Temperature, °F:	120	120	120	120
Operating Pressure, in H_2O	≤29	1"	29-75	ATM
Diff. Pressure @ design flow, in H_2O (Note 3)	≤28		14.8	
Guaranteed VOC Removal	99%		99%	

Notes:

1. Vendor to provide type, size and quantity of filters.
2. ACFM measured at 15 psia and 120 F.
3. Maximum differential pressure across filter set from flange to flange.

4.- (*) Expected/(**)guaranteed

2	11/27/2012	Issue for Purchase	JS	MZA	APF	
1	11/13/2012	Re-issued for Bid	JS	MZA	APF	
0	3/29/12	Issued for Bid	WMP	MZA	APF	
No.	Date	Description	By	Chk'd	App'd	App'd

Information and know-how hereon are confidential and proprietary property of Abener Teyma Mojave General Partnership and may not be used, reproduced, or revealed to others except in accordance with the terms of a contract with or other written permission of Abener Teyma Mojave General Partnership.

Specification For Carbon Filters	Job No.: 120010	Spec. No.: 6007-ESP-ATP-44-62-F206
	Item No.: See Spec	No. Req'd.: See spec
	Project: Mojave	
	Ref.:	Issue: Dated :

Maximum Flow Rate Case

Operating Mode 1: Expansion Tank Venting Duration: 40 minutes

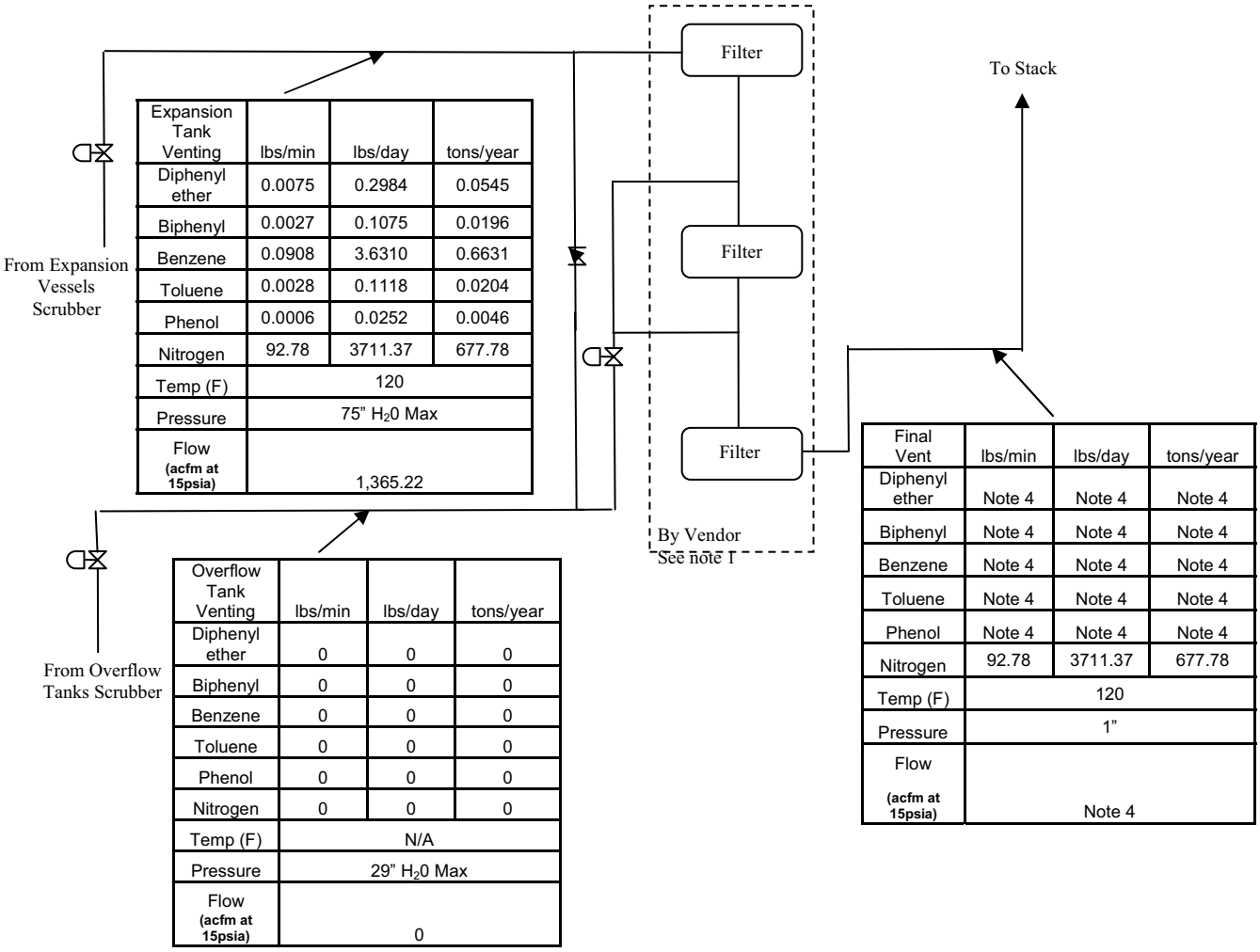

Expansion Tank Venting	lbs/min	lbs/day	tons/year
Diphenyl ether	0.0075	0.2984	0.0545
Biphenyl	0.0027	0.1075	0.0196
Benzene	0.0908	3.6310	0.6631
Toluene	0.0028	0.1118	0.0204
Phenol	0.0006	0.0252	0.0046
Nitrogen	92.78	3711.37	677.78
Temp (F)	120		
Pressure	75" H_20 Max		
Flow (acfm at 15psia)	1,365.22		

Overflow Tank Venting	lbs/min	lbs/day	tons/year
Diphenyl ether	0	0	0
Biphenyl	0	0	0
Benzene	0	0	0
Toluene	0	0	0
Phenol	0	0	0
Nitrogen	0	0	0
Temp (F)	N/A		
Pressure	29" H_20 Max		
Flow (acfm at 15psia)	0		

Final Vent	lbs/min	lbs/day	tons/year
Diphenyl ether	Note 4	Note 4	Note 4
Biphenyl	Note 4	Note 4	Note 4
Benzene	Note 4	Note 4	Note 4
Toluene	Note 4	Note 4	Note 4
Phenol	Note 4	Note 4	Note 4
Nitrogen	92.78	3711.37	677.78
Temp (F)	120		
Pressure	1"		
Flow (acfm at 15psia)	Note 4		

Notes:

1. Vendor to provide type, size and quantity of filters.
2. ACFM measured at 15 psia and 120 F.
3. Maximum differential pressure across filter set from flange to flange.
4. Per vendor's design.

No.	Date	Description	By	Chk'd	App'd	App'd
2	11/29/2012	Issued for Purchase	JS	MZA	APF	
1	11/13/2012	Issued for Bid	JS	MZA	APF	
0	03/29/12	Issued for Bid	WMP	MZA	APF	

Information and know-how hereon are confidential and proprietary property of Abener Teyma Mojave General Partnership and may not be used, reproduced, or revealed to others except in accordance with the terms of a contract with or other written permission of Abener Teyma Mojave General Partnership.

Specification For Carbon Filters	Job No.: 120010	Spec. No.: 6007-ESP-ATP-44-62-F206
	Item No.: See Spec	No. Req'd.: See spec
	Project: Mojave	
	Ref.:	Issue: Dated :

Maximum Flow Rate Case

Operating Mode 2: Overflow Tank Venting Duration: 20 minutes

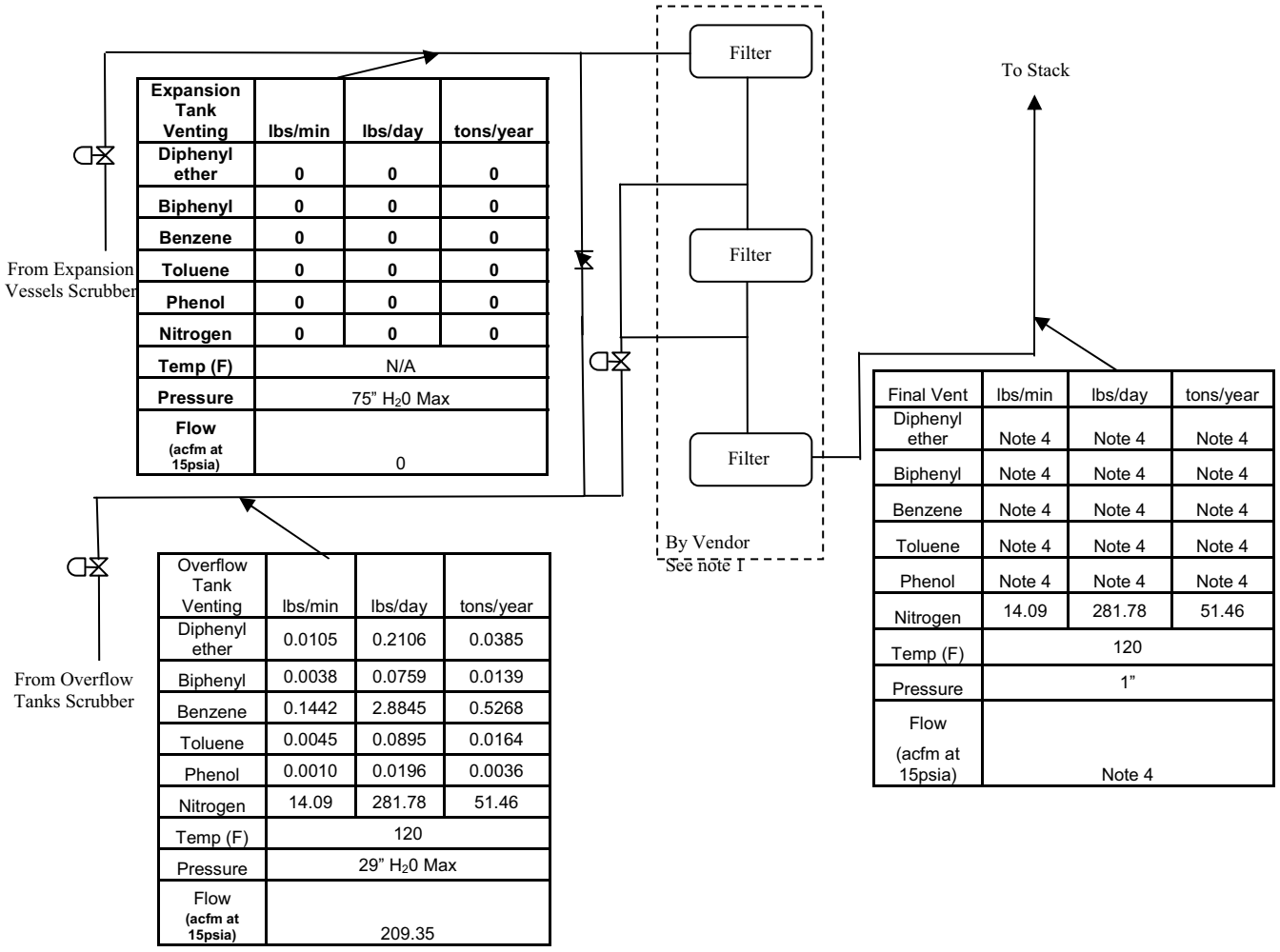

Expansion Tank Venting	lbs/min	lbs/day	tons/year
Diphenyl ether	0	0	0
Biphenyl	0	0	0
Benzene	0	0	0
Toluene	0	0	0
Phenol	0	0	0
Nitrogen	0	0	0
Temp (F)	N/A		
Pressure	75" H_20 Max		
Flow (acfm at 15psia)	0		

Overflow Tank Venting	lbs/min	lbs/day	tons/year
Diphenyl ether	0.0105	0.2106	0.0385
Biphenyl	0.0038	0.0759	0.0139
Benzene	0.1442	2.8845	0.5268
Toluene	0.0045	0.0895	0.0164
Phenol	0.0010	0.0196	0.0036
Nitrogen	14.09	281.78	51.46
Temp (F)	120		
Pressure	29" H_20 Max		
Flow (acfm at 15psia)	209.35		

Final Vent	lbs/min	lbs/day	tons/year
Diphenyl ether	Note 4	Note 4	Note 4
Biphenyl	Note 4	Note 4	Note 4
Benzene	Note 4	Note 4	Note 4
Toluene	Note 4	Note 4	Note 4
Phenol	Note 4	Note 4	Note 4
Nitrogen	14.09	281.78	51.46
Temp (F)	120		
Pressure	1"		
Flow (acfm at 15psia)	Note 4		

Notes:

1. Vendor to provide type, size and quantity of filters.
2. ACFM measured at 15 psia and 120 F.
3. Maximum differential pressure across filter set from flange to flange.
4. Per vendor's design.

No.	Date	Description	By	Chk'd	App'd	App'd
2	11/29/2012	Issued for Purchase	JS	MZA	APF	
1	11/13/2012	Issued for Bid	JS	MZA	APF	
0	03/29/12	Issued for Bid	WMP	MZA	APF	

Information and know-how hereon are confidential and proprietary property of Abener Teyma Mojave General Partnership and may not be used, reproduced, or revealed to others except in accordance with the terms of a contract with or other written permission of Abener Teyma Mojave General Partnership.

Specification For Carbon Filters	Job No.: 120010	Spec. No.: 6007-ESP-ATP-44-62-F206
	Item No.: See Spec	No. Req'd.: See spec
	Project: Mojave	
	Ref.:	Issue: Dated :

Maximum Concentration Case

Data Sheets CARBON FILTERS MF-206	ABENER / TEYMA REQUIREMENT		Vendor: VENDOR INFORMATION	
PERFORMANCE	**Inlet Design**	**Outlet Design**	**Inlet Design**	**Outlet Design**
Expansion Tank Venting				
Total Gas Flow Rate lb/min.	81.40			
Flow Duration, min. /day	40			
Flow Composition, lb/min				
Diphenyl ether	0.0056	By vendor	0.0056	0.0001(*)
Biphenyl	0.0020	By vendor	0.0020	<0.0001(*)
Benzene	0.3832	≤1% of inlet	0.3832	0.0038 (**)
Toluene	0.0147	≤1% of inlet	0.0147	0.0001(**)
Phenol	0.0037	By vendor	0.0037	<0.0001(*)
Nitrogen	80.99	80.99	80.99	80.99
High Boilers	0.0003	By vendor	0.0003	<0.0001(*)
Total Low Boilers	0.4015	By vendor	0.4015	0.0040(*)
Total Non-N_2	0.4094	By vendor	0.4094	0.0041(*)
Gas Enthalpy, Btu/lb	11.85	11.85	11.85	11.85
Gas Flow, acfm: (See note 2)	1193.30	By vendor	1193.30	1193.30
Operating Temperature, °F:	120	120	120	120
Operating Pressure, in H_2O:	≤75	1	75-29	ATM
Diff. Pressure @ design flow, in H_2O (Note 3)	≤74		14.8	
Guaranteed VOC Removal	99%		99%	

Notes:

1. Vendor to provide type, size and quantity of filters.
2. ACFM measured at 15 psia and 120 F.
3. Maximum differential pressure across filter set from flange to flange.

4.- (*) Expected/(**)guaranteed

No.	Date	Description	By	Chk'd	App'd	App'd
2	11/29/2012	Issued for Purchase	JS	MZA	APF	
1	11/13/2012	Issued for Bid	JS	MZA	APF	
0	03/29/12	Issued for Bid	WMP	MZA	APF	

Information and know-how hereon are confidential and proprietary property of Abener Teyma Mojave General Partnership and may not be used, reproduced, or revealed to others except in accordance with the terms of a contract with or other written permission of Abener Teyma Mojave General Partnership.

Specification For Carbon Filters	Job No.: 120010	Spec. No.: 6007-ESP-ATP-44-62-F206
	Item No.: See Spec	No. Req'd.: See spec
	Project: Mojave	
	Ref.:	Issue: Dated :

Maximum Concentration Case

Data Sheets CARBON FILTERS MF-206	ABENER / TEYMA REQUIREMENT		Vendor: VENDOR INFORMATION	
PERFORMANCE	**Inlet Design**	**Outlet Design**	**Inlet Design**	**Outlet Design**
Overflow Tank Venting				
Total Gas Flow Rate lb/min.	13.55			
Flow Duration, min. /day	20			
Flow Composition, lb/min				
Diphenyl ether	0.0084	By vendor	0.0084	0.0001(*)
Biphenyl	0.0030	By vendor	0.0030	<0.0001(*)
Benzene	0.6815	≤1% of inlet	0.6815	0.0068(**)
Toluene	0.0252	≤1% of inlet	0.0252	0.0003(**)
Phenol	0.0060	By vendor	0.0060	0.0001(*)
Nitrogen	12.83	12.83	12.83	12.83
High Boilers	0.0004	By vendor	0.0004	<0.0001(*)
Total Low Boilers	0.7127	By vendor	0.7127	0.0071(*)
Total Non-N_2	0.7245	By vendor	0.7245	0.0072(*)
Gas Enthalpy, Btu/lb	33.80	33.80	33.80	33.80
Gas Flow, acfm: (Note 1)	193.59	By vendor	19.59	193.59
Operating Temperature, °F:	120	120	120	120
Operating Pressure, in H_2O	≤29	1"	29-75	ATM
Diff. Pressure @ design flow, in H_2O (Note 3)	≤28		14.8	
Guaranteed VOC Removal	99%		99%	

Notes:

1. Vendor to provide type, size and quantity of filters.
2. ACFM measured at 15 psia and 120 F.
3. Maximum differential pressure across filter set from flange to flange.

4.- (*) Expected/(**)guaranteed

No.	Date	Description	By	Chk'd	App'd	App'd
2	11/29/2012	Issued for Purchase	JS	MZA	APF	
1	11/13/2012	Issued for Bid	JS	MZA	APF	
0	03/29/12	Issued for Bid	WMP	MZA	APF	

Information and know-how hereon are confidential and proprietary property of Abener Teyma Mojave General Partnership and may not be used, reproduced, or revealed to others except in accordance with the terms of a contract with or other written permission of Abener Teyma Mojave General Partnership.

Specification For Carbon Filters	Job No.: 120010	Spec. No.: 6007-ESP-ATP-44-62-F206
	Item No.: See Spec	No. Req'd.: See spec
	Project: Mojave	
	Ref.:	Issue: Dated :

Maximum Concentration Case

Operating Mode 1: Expansion Tank Venting Duration: 40 minutes

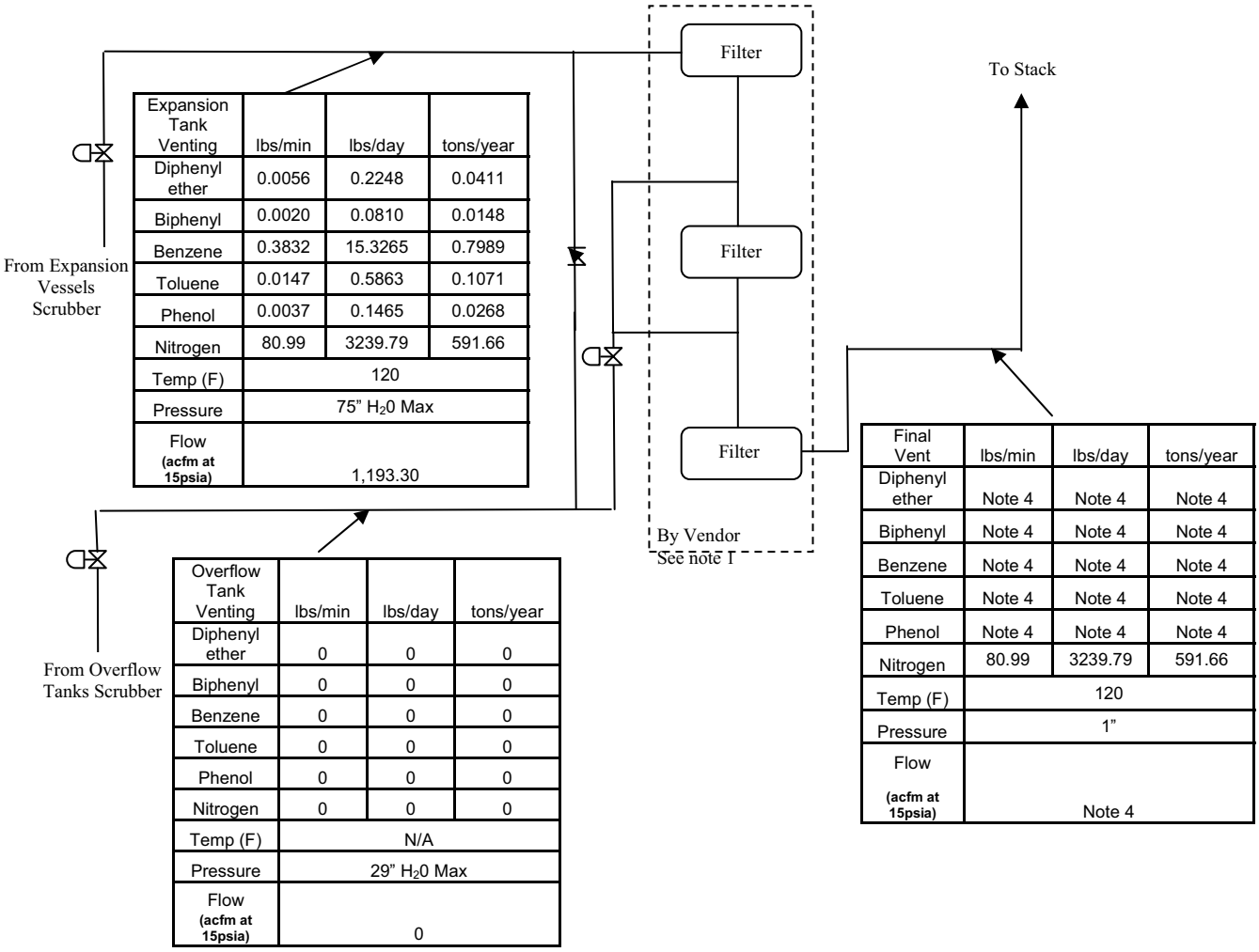

Expansion Tank Venting	lbs/min	lbs/day	tons/year
Diphenyl ether	0.0056	0.2248	0.0411
Biphenyl	0.0020	0.0810	0.0148
Benzene	0.3832	15.3265	0.7989
Toluene	0.0147	0.5863	0.1071
Phenol	0.0037	0.1465	0.0268
Nitrogen	80.99	3239.79	591.66
Temp (F)	120		
Pressure	75" H_20 Max		
Flow (acfm at 15psia)	1,193.30		

Overflow Tank Venting	lbs/min	lbs/day	tons/year
Diphenyl ether	0	0	0
Biphenyl	0	0	0
Benzene	0	0	0
Toluene	0	0	0
Phenol	0	0	0
Nitrogen	0	0	0
Temp (F)	N/A		
Pressure	29" H_20 Max		
Flow (acfm at 15psia)	0		

Final Vent	lbs/min	lbs/day	tons/year
Diphenyl ether	Note 4	Note 4	Note 4
Biphenyl	Note 4	Note 4	Note 4
Benzene	Note 4	Note 4	Note 4
Toluene	Note 4	Note 4	Note 4
Phenol	Note 4	Note 4	Note 4
Nitrogen	80.99	3239.79	591.66
Temp (F)	120		
Pressure	1"		
Flow (acfm at 15psia)	Note 4		

1. Vendor to provide type, size and quantity of filters.
2. ACFM measured at 15 psia and 120 F.
3. Maximum differential pressure across filter set from flange to flange.
4. Per vendor's design.

No.	Date	Description	By	Chk'd	App'd	App'd
2	11/29/2012	Issued for Purchase	JS	MZA	APF	
1	11/13/2012	Issued for Bid	JS	MZA	APF	
0	03/29/12	Issued for Bid	WMP	MZA	APF	

Information and know-how hereon are confidential and proprietary property of Abener Teyma Mojave General Partnership and may not be used, reproduced, or revealed to others except in accordance with the terms of a contract with or other written permission of Abener Teyma Mojave General Partnership.

Specification For Carbon Filters	Job No.: 120010	Spec. No.: 6007-ESP-ATP-44-62-F206
	Item No.: See Spec	No. Req'd.: See spec
	Project: Mojave	
	Ref.:	Issue: Dated :

Maximum Concentration Case

Operating Mode 2: Overflow Tank Venting Duration: 20 minutes

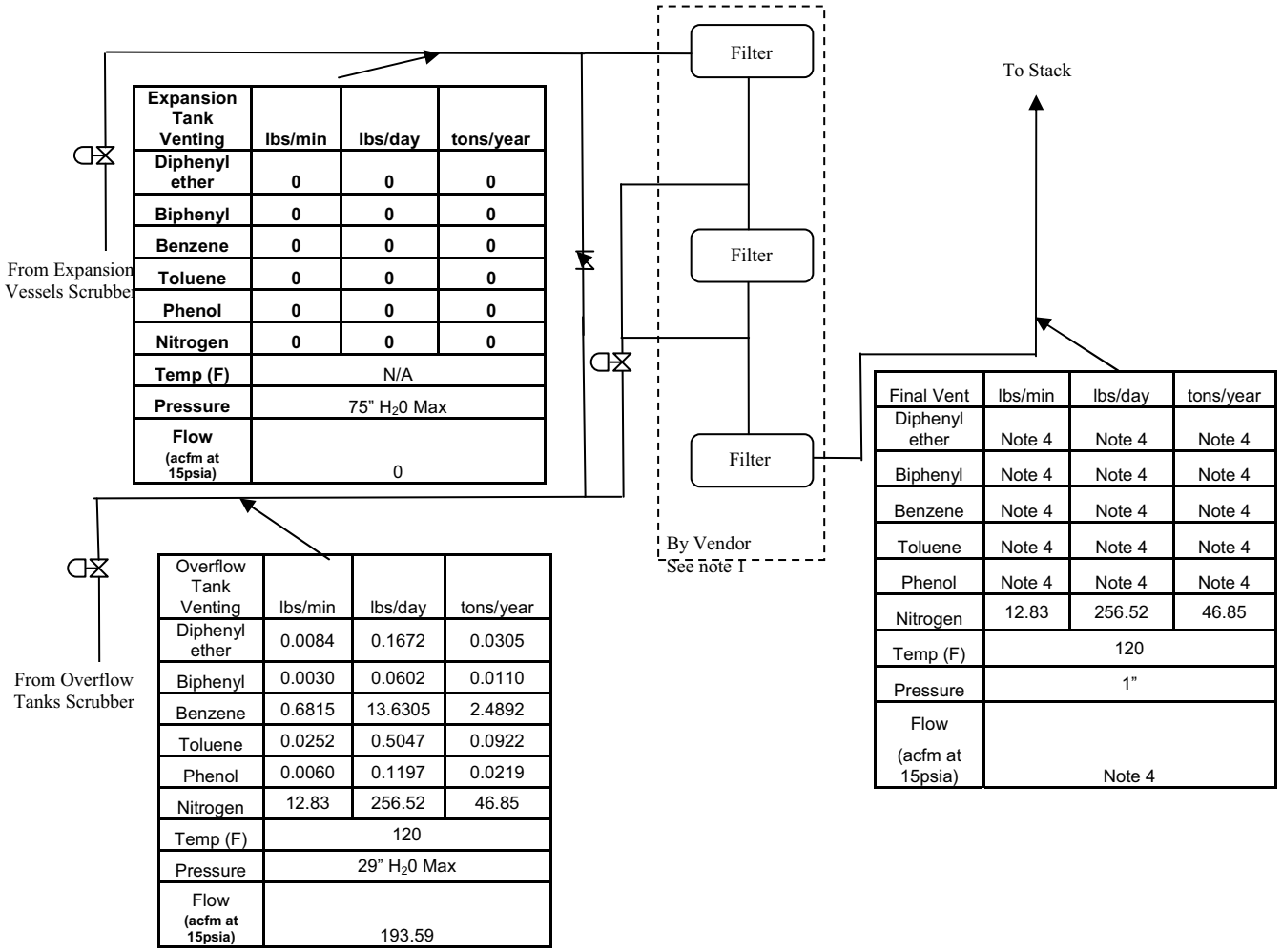

Expansion Tank Venting	lbs/min	lbs/day	tons/year
Diphenyl ether	0	0	0
Biphenyl	0	0	0
Benzene	0	0	0
Toluene	0	0	0
Phenol	0	0	0
Nitrogen	0	0	0
Temp (F)	N/A		
Pressure	75" H_20 Max		
Flow (acfm at 15psia)	0		

Overflow Tank Venting	lbs/min	lbs/day	tons/year
Diphenyl ether	0.0084	0.1672	0.0305
Biphenyl	0.0030	0.0602	0.0110
Benzene	0.6815	13.6305	2.4892
Toluene	0.0252	0.5047	0.0922
Phenol	0.0060	0.1197	0.0219
Nitrogen	12.83	256.52	46.85
Temp (F)	120		
Pressure	29" H_20 Max		
Flow (acfm at 15psia)	193.59		

Final Vent	lbs/min	lbs/day	tons/year
Diphenyl ether	Note 4	Note 4	Note 4
Biphenyl	Note 4	Note 4	Note 4
Benzene	Note 4	Note 4	Note 4
Toluene	Note 4	Note 4	Note 4
Phenol	Note 4	Note 4	Note 4
Nitrogen	12.83	256.52	46.85
Temp (F)	120		
Pressure	1"		
Flow (acfm at 15psia)	Note 4		

Notes:

1. Vendor to provide size and quantity of filters.
2. ACFM measured at 15 psia and 120 F.
3. Maximum differential pressure across filter set from flange to flange.
4. Per vendor's design.

No.	Date	Description	By	Chk'd	App'd	App'd
2	11/29/2012	Issued for Purchase	JS	MZA	APF	
1	11/13/2012	Issued for Bid	JS	MZA	APF	
0	03/29/12	Issued for Bid	WMP	MZA	APF	

Information and know-how hereon are confidential and proprietary property of Abener Teyma Mojave General Partnership and may not be used, reproduced, or revealed to others except in accordance with the terms of a contract with or other written permission of Abener Teyma Mojave General Partnership.

Specification For Carbon Filters	Job No.: 120010	Spec. No.: 6007-ESP-ATP-44-62-F206
	Item No.: See Spec	No. Req'd.: See spec
	Project: Mojave	
	Ref.:	Issue: Dated :

No.	Date	Description	By	Chk'd	App'd	App'd
2	11/29/2012	Issued for Purchase	JS	MZA	APF	
1	11/13/2012	Issued for Bid	JS	MZA	APF	
0	03/29/12	Issued for Bid	WMP	MZA	APF	

Information and know-how hereon are confidential and proprietary property of Abener Teyma Mojave General Partnership and may not be used, reproduced, or revealed to others except in accordance with the terms of a contract with or other written permission of Abener Teyma Mojave General Partnership.

Specification For HTF Scrubbers	Job No.: 120010	Spec. No.: 6007-ESP-ATP-44-62-V208
	Item No.: See Spec	No. Req'd.: 4
	Project: Mojave	
	Ref.:	Issue: 1 Dated : 11/13/12

Instructions:

1. Initialing (By/Chk'd/App'd) required on cover sheet only. All other title block information must be included on all pages.

2. Revisions are identified in the body of the Specification.

Rev. No.	Date	By	Chk'd	App'd	Description of Revision Including Page Numbers
0	21 Oct 2011	WMP	MZA	TS APF	Issued For Quotes
1	**13 Nov 2012**	**SMR**	**MZA**	**APF**	**Issued For Purchase**

1	11/13/12	Issued For Purchase	SMR	MZA	APF	
0	10/21/11	Issued For Quotes	WMP	MZA	APF	TS
No.	Date	Description	By	Chk'd	App'd	App'd

Information and know-how hereon are confidential and proprietary property of Abener Teyma Mojave General Partnership and may not be used, reproduced, or revealed to others except in accordance with the terms of a contract with or other written permission of Abener Teyma Mojave General Partnership.

Specification For HTF Scrubbers	Job No.: 120010	Spec. No.: 6007-ESP-ATP-44-62-V208
	Item No.: See Spec	No. Req'd.: 4
	Project: Mojave	
	Ref.:	Issue: 1 Dated : 11/13/12

1. Project Summary

1.1 The project consists of two, 140 MW, solar thermal powered electric generating plants, referred to as Alpha Plant and Beta Plant. The plants will be built on adjacent sites in an unincorporated area of San Bernardino County near Hinkley, California. The plant sites are located approximately six miles north of highway CA-58 on Harper Lake Road, approximately 20 miles west of Barstow.

1.2 The Vendor shall furnish two (2) HTF Overflow Tank Vent Scrubbers, one (1) per plant site, and two (2) HTF Expansion Tank Vent Scrubbers, one (1) per plant site, meeting the requirements set forth in this specification. This specification covers the minimum requirements for the performance, design, materials, fabrication, testing and delivery of the scrubbers.

2. General

2.1 The attachments identified in this document are considered to be part of this specification. Attached specifications shall be met and followed by the Vendor in full. All drawings and documents included in this package are considered "Contract Documents".

2.2 Definitions

a. "Vendor" or "vendor" shall mean **The Clean Air Group, A Croll Reynolds Company, supplier of the** HTF Overflow Tank Vent Scrubber and HTF Expansion Tank Vent Scrubber for which this specification is intended.

b. "Engineer", "Purchaser" or "Customer" shall mean the "Abener Teyma Mojave General Partnership".

c. "Owner" shall mean "Mojave Solar LLC".

d. "Construction Manager" or "Construction Superintendent" shall mean "Abener Teyma Mojave General Partnership".

2.3 The imperative language of this specification is directed to the Vendor, unless specifically noted otherwise. All directives such as "provide", "perform", "test", etc., are addressed solely to Vendor, whether or not the word "Vendor" is specifically mentioned. Work by Others will be specifically identified.

1	11/13/12	Issued For Purchase	SMR	MZA	APF	
0	10/21/11	Issued For Quotes	WMP	MZA	APF	TS
No.	Date	Description	By	Chk'd	App'd	App'd

Information and know-how hereon are confidential and proprietary property of Abener Teyma Mojave General Partnership and may not be used, reproduced, or revealed to others except in accordance with the terms of a contract with or other written permission of Abener Teyma Mojave General Partnership.

3. Function

The HTF Overflow Tank Vent Scrubber and HTF Expansion Tank Vent Scrubber will be used to remove HTF vapors from the vent gases of the HTF Overflow Tanks and the HTF Low Boiler Condensate Receiver Vessel. The scrubbers will consist of a spray scrubbing tower using a cooled HTF liquid spray and a packing media to condense the HTF vapors including benzene, toluene, and phenol from the vent gases. The vent gases will enter at the bottom of the scrubber and pass upward through the packing media, spray and mist eliminators before being vented out of the scrubber to a carbon filter furnished by others.

4. Operation

The scrubbers will operate intermittently, as required, during the day. The HTF vapors will be displaced at least once daily from the HTF Overflow Tank and the Expansion Vessels due to thermal expansion of the HTF as it is warmed to operating temperatures. The HTF system will be vented as needed to control the maximum system pressures. **The venting and condensing is expected to occur during morning start-up and operate for approximately 40 minutes.**

5. Location

5.1 The scrubbers shall be installed outdoors. For proposal purposes, assume the vessel is attached to an open structure with the bottom nozzle 35 feet above grade.

5.2 Electrical Area Classification - The scrubbers shall be installed in an area that is classified as a Class I Division 2 location per NEC 500.5 (Classification of Locations).

5.3 The equipment shall meet all the design conditions including the seismic and climatic conditions in this specification. Refer to specification 6007-ESP-ATP-00-60-G100 Project Design Criteria, for site specific information.

6. Schedule

Vendor's schedule shall comply with the Abener Teyma schedule. The vendor shall propose the best available delivery.

Information and know-how hereon are confidential and proprietary property of Abener Teyma Mojave General Partnership and may not be used, reproduced, or revealed to others except in accordance with the terms of a contract with or other written permission of Abener Teyma Mojave General Partnership.

7. Performance

7.1 The vendor supplied equipment shall meet the performance requirements defined in this specification and under the column marked "Abener Teyma Requirement" on the Data Sheets; included herein.

7.2 Over time the HTF will degrade and the quantity of low boilers; benzene, toluene, and phenol, in the HTF will increase. The HTF will be cleaned and/or replaced after seven years of operation. The included data sheets describe the concentrations of inlet gases and the allowable concentrations of the outlet gases for both the minimum and maximum concentrations.

7.3 Vendor shall have sole responsibility for meeting the performance requirements. Vendor shall provide all equipment, appurtenances, and accessories required in order to meet this performance.

7.4 The vendor shall determine the optimal scrubber design, including vessel dimensions, packing type and depth, spray nozzle quantity and type, and mist eliminator type and depth.

7.5 The scrubbers (including any auxiliaries) shall be designed and constructed for a minimum service life of 30 years.

8. Scope

8.1 Vendor shall furnish the design, submittal data, fabrication, assembly, inspection, testing, packing, and shipping of the scrubbers as specified herein.

8.2 Vendor shall furnish four (4) HTF Scrubbers.

Equipment Name	Tag Number	Plant Site	Quantity
HTF Overflow Vent Scrubber	A-MV-208	Alpha	1
HTF Expansion Tank Vent Scrubber	A-MV-209	Alpha	1
HTF Overflow Vent Scrubber	B-MV-208	Beta	1
HTF Expansion Tank Vent Scrubber	B-MV-209	Beta	1

Information and know-how hereon are confidential and proprietary property of Abener Teyma Mojave General Partnership and may not be used, reproduced, or revealed to others except in accordance with the terms of a contract with or other written permission of Abener Teyma Mojave General Partnership.

8.3 The scrubbers shall include, but are not limited to, the following:

a. Scrubber vessel
b. Packing
c. Spray nozzles
d. Internal spray manifold
e. Mist eliminators
f. Supports for internal components
g. Manways with davits
h. Vessel nozzles per data sheet.
i. Vessel support lugs / saddles and seismic restraints designed per CBC 2010
j. Anchor bolt sizing and selection
k. Insulation support rings and pins
l. Start up and commissioning spare parts
m. Spare parts for one year of operation.
n. Other items as specified on the Equipment Data Sheets
o. Structural support steel for scrubbers designed per CBC 2010

8.4 Vendor Data

The Vendor shall furnish the Vendor Submittal Data for the HTF Scrubbers as specified here-in. Refer to specification 6007-ESP-ATP-44-62-V208V for additional Vendor Data Requirements.

8.5 Work By Others

The following is out of the scope of this specification:

a. Receiving, unloading, storage and handling of HTF Scrubbers on site.
b. (deleted)
c. Installation of the Scrubbers.
d. Furnishing and installation of anchor bolts.
e. Piping prior to the vessel inlet flanges or after the outlet flanges.
f. Insulation.

Information and know-how hereon are confidential and proprietary property of Abener Teyma Mojave General Partnership and may not be used, reproduced, or revealed to others except in accordance with the terms of a contract with or other written permission of Abener Teyma Mojave General Partnership.

9. Codes and Standards

9.1 At a minimum all applicable portions of the codes and standards listed below shall be followed.

a. AISC - American Institute of Steel Construction
b. AISI – American Iron and Steel Institute
c. ANSI – American National Standards Institute
d. ASME – American Society of Mechanical Engineers
e. ASNT – American Society for Nondestructive Testing
f. ASTM – American Society of Testing Materials
g. AWS – American Welding Society
h. CAL/OSHA – California Occupational Safety and Health Administration
i. CBC – California Building Standards Code (2010)
j. NEC – National Electric Code
k. NFPA – National Fire Protection Association
l. OSHA – Occupational Safety and Health Act
m. SSPC – The Society for Protective Coatings

9.2 Vendor shall meet all federal, state, and local laws and regulations.

9.3 Should there be any conflict between applicable codes, standards, specifications noted herein or vendor's recommendations and those of the locality of the project, the more stringent code shall apply.

10. Design

The vendor shall design the scrubbers to meet the operating conditions and performance requirements set forth in this specification. Any conflicts between the specification, the data sheets and the appropriate codes and standards shall be referred to Abener Teyma for resolution.

10.1 Submittals

10.1.1 Vendor shall provide engineering drawings and calculations for approval prior to the start of fabrication.

10.1.2 Refer to and comply with specification 6007-ESP-ATP-44-62-V208V, Vendor Data Requirements - HTF Scrubbers.

Information and know-how hereon are confidential and proprietary property of Abener Teyma Mojave General Partnership and may not be used, reproduced, or revealed to others except in accordance with the terms of a contract with or other written permission of Abener Teyma Mojave General Partnership.

10.1.3 Approval of Vendor's drawings and calculations is limited to verifying general compliance with specifications and design drawings, and does not imply verification of dimensions, quantities, or calculations. Vendor is not relieved from responsibility for accurate dimensioning, equipment sizing, fabrication to required tolerances, and fabrication fit-up.

10.1.4 U. S. customary units shall be used on all drawings and calculations.

10.1.5 Drawings:

(1) A general arrangement drawing shall be furnished for each vessel, and shall contain the data shown in the appropriate Data Sheet. The location of the vessel marking or nameplate, the size and orientation of all nozzles and connections, and the anchor bolt layout shall also be shown on this drawing.

(2) A separate outline drawing for each vessel shall be furnished with appropriate markings to cross-reference each component (shell plates, heads, nozzles, flanges, forgings, skirt plates, etc.) to the applicable mill test certificates for the steels used in the construction.

(3) Vendor shall provide all drawings that are issued for fabrication, sealed by a licensed Professional Engineer who is legally authorized to practice in the State of California.

(4) Fabrication drawings shall show weld details and shall reference applicable welding procedures. The drawings shall also include impact test requirements, showing (as applicable):

a. Component
b. Thickness for impact purposes
c. Material specification
d. Critical Exposure Temperature
e. Minimum Design Metal Temperature
f. Appropriate Charpy impact requirements (average/minimum values)

Information and know-how hereon are confidential and proprietary property of Abener Teyma Mojave General Partnership and may not be used, reproduced, or revealed to others except in accordance with the terms of a contract with or other written permission of Abener Teyma Mojave General Partnership.

10.1.6 Data and Calculations

(1) Design calculations (including lifting attachments and support lugs) made by the Vendor shall be furnished prior to or along with submission of drawings for approval. When calculations are made using a computer, all input data, assumptions, computer program version used, and a summary of the results shall be furnished.

(2) Vendor shall provide their structural calculation package, sealed by a licensed Professional Engineer who is legally authorized to practice in the State of California.

10.2 Vessels

10.2.1 The HTF Expansion Tank Vent Scrubbers shall be designed, manufactured, tested and stamped by the manufacturer in accordance with the ASME Boiler and Pressure Vessel Code, Section VIII Division 1.

10.2.2 The HTF Overflow Tank Vent Scrubbers shall be designed and manufactured by the manufacturer in accordance with the ASME Boiler and Pressure Vessel Code, Section VIII Division 1. However, the HTF Overflow Tank Vent Scrubbers, being low pressure vessels, shall not require an ASME code stamp.

10.2.3 Vessels shall be designed to withstand internal or external pressure and mechanical loads induced by vessel dead load, process, contents, earthquake, wind and other specified loadings. Wind and earthquake loads shall be in accordance with the Project Design Criteria described in Specification 6007-ESP-ATP-00-60-G001. Load combinations must be appropriately considered. Record design calculations are required.

10.2.4 The minimum insulation design load shall be for 3" thickness on heads and shell using 8 lb. / ft^3 mineral wool insulation with aluminum jacket.

10.2.5 All vessels, with physical dimensions within the allowable limits for shipping, shall be completely shop fabricated and tested before shipment.

Information and know-how hereon are confidential and proprietary property of Abener Teyma Mojave General Partnership and may not be used, reproduced, or revealed to others except in accordance with the terms of a contract with or other written permission of Abener Teyma Mojave General Partnership.

10.2.6 Vendor shall furnish the vessels complete as shown on data sheets and as noted herein and shall include all necessary nozzles, blind flanges, studs, nuts, bolts, clips, support brackets, lifting lugs, davits, and gaskets.

10.2.7 Vessels shall include lifting lugs and tailing lugs, designed by vendor, for use in loading, unloading, and field erection of vessel. Empty weight shall be marked on the vessel by using lettering no less than 6 inches high.

10.2.8 Anchor bolts shall be furnished by Abener Teyma as specified by Vendor. Vendor shall specify bolt material, size, and quantities and provide drawings and loading diagrams for structural design.

10.2.9 Vendor shall extend nozzles a minimum 8 inches outside surface of the vessel. **Vendor shall check the projection to ensure that every nozzle is outside of the insulation by at least 5 inches.**

10.2.10 Each vessel shall include four stainless steel grounding lugs. Grounding lugs shall be a minimum of 3" wide x 3 "tall x ½" thick plates, and shall be made of 304 grade stainless steel. The grounding lugs shall be drilled to match "Burndy Qiklug" type "QA28-2N" which utilizes NEMA bolt spacing. Grounding lugs shall be welded to the vessel support lugs. The lugs shall be oriented so that the holes in the lug are on the vertical centerline.

10.2.11 Materials of construction shall be per the attached data sheet. Where materials of construction are not specified, Vendor shall propose materials for each item as appropriate for the service conditions.

10.2.12 All materials purchased by Vendor shall meet nationally recognized standards unless otherwise approved by Abener Teyma.

10.2.13 All materials shall be compatible with the vessel contents and in accordance with all applicable welding procedures.

10.2.14 Copies of mill test reports for materials shall be provided to Abener Teyma by Vendor.

10.2.15 The design shall be such to avoid any corrosion of vessel equipment.

Information and know-how hereon are confidential and proprietary property of Abener Teyma Mojave General Partnership and may not be used, reproduced, or revealed to others except in accordance with the terms of a contract with or other written permission of Abener Teyma Mojave General Partnership.

10.2.16 The design shall be such to avoid any contamination of the vessel contents once the vessel is put into service.

10.2.17 The layout of weld seams shall be such that it will allow full access for inspection. Circumferential seams shall not be located within a distance of 1-1/2" of any external compression ring, internal ring, support ring, etc. Nozzles and manholes shall not intersect any weld seams, unless approved by Abener Teyma.

10.2.18 Vendor shall provide corrosion allowances as specified by the data sheets.

10.2.19 The minimum required thickness of plate and other structural members shall be that which is necessary to satisfy tension and compression strength requirements for the specified design conditions, plus the corrosion allowance.

10.2.20 All nozzles shall be flush with the inside surface of the vessel wall, unless otherwise specified.

10.2.21 Nozzle flanges and manway flanges shall be the material as indicated on the Data Sheets.

10.2.22 Internal bolting is not allowed unless required for maintenance purposes. Nuts and bolts shall use safety wire, cotter pins or other mechanical methods to prevent bolts from loosening due to vibration.

10.2.23 Vendor to indicate on project drawings the maximum allowable loads on nozzles. Nozzles shall be designed for a minimum of the loads as indicated below.

	Force (pounds)		Moments (foot pounds)	
Nozzle Size (NPS)	Sum	Force	Sum	Force
3 and smaller	750	428	1500	855
4	1400	800	2500	1425
6	2000	1140	6000	3425
8	2800	1600	12000	6850
10	3700	1850	16000	9120
12	4600	2625	25000	14250

Example: NPS-3 nozzle would be subjected to simultaneous loads of F_{axial}= 428. lbs, $F_{circumferential}$= 428. lbs, F_{radial}= 428. lbs , and M_{axial}= 855. ft-lbs, $M_{circumferntial}$= 855. ft-lbs, M_{radial}= 855. ft-lbs

1	11/13/12	Issued For Purchase	SMR	MZA	APF	
0	10/21/11	Issued For Quotes	WMP	MZA	APF	TS
No.	Date	Description	By	Chk'd	App'd	App'd

Information and know-how hereon are confidential and proprietary property of Abener Teyma Mojave General Partnership and may not be used, reproduced, or revealed to others except in accordance with the terms of a contract with or other written permission of Abener Teyma Mojave General Partnership.

10.2.24 Manways

(1) Manways shall be provided for accessing and ventilating the scrubber interior.

(2) Manways shall be located to provide easy access for maintenance and cleaning of the scrubber including cleaning or replacement of the packing, spray nozzles and mist eliminators.

(3) Manway covers shall be equipped with davits and handles to aid in removing and replacing the covers.

10.2.25 Each vessel shall include insulation support rings. Rings shall be provided at the top and bottom tangents. Additional rings shall be provided as required at no more than 10 foot spacing. Rings shall extend 2 inches beyond the shell outside diameter. Rings shall be segmented and detachable for shipment. Attachment brackets shall be continuously welded to the vessel.

10.2.26 Each vessel shall include insulation support pins welded to the bottom head. Insulation will be 3" thick mineral wool. Pins are to be #10 gauge (3.6mm) weld pins 3-1/2" long on 12" centers. The companion 2-1/2" square speed clips shall be shipped with the vessel. The pins shall be carbon steel.

10.2.27 **Any instrumentation provided by the vendor must comply with the attached specification, 6007-ESP-ATP-00-30-M100 (Electrical and Instrument Systems On Packaged Mechanical Equipment)**

10.3 Vessel Internals

10.3.1 The Vendor shall design the scrubber packing, mist eliminators and spray nozzles to allow for removal **through nozzles F1 & F2** for cleaning and maintenance.

10.3.2 The selection of type, size, and depth of packing shall be by the vendor.

10.3.3 The scrubber and packing design shall prevent channeling and provide a uniform gas velocity across the scrubber cross section.

Information and know-how hereon are confidential and proprietary property of Abener Teyma Mojave General Partnership and may not be used, reproduced, or revealed to others except in accordance with the terms of a contract with or other written permission of Abener Teyma Mojave General Partnership.

10.3.4 The maximum pressure drop from the inlet to outlet of the scrubber shall not exceed the value listed in the equipment data sheet. **Vendor to provide the maximum pressure drop across all elements of the scrubber, from inlet to outlet.**

10.3.5 The selection of type, size, and quantity of the spray nozzles shall be by the vendor.

10.3.6 The maximum total flow and inlet pressure of the HTF to the spray nozzles shall be as indicated on the data sheet.

10.3.7 The selection of type, size, and depth of the mist eliminator shall be by the vendor. The mist eliminator shall coalesce and remove entrained HTF droplets from the gas stream to prevent carry over to the carbon filters.

10.4 Insulation and Heat Tracing

10.4.1 Piping and vessel insulation will be mineral wool bats furnished and installed by others.

10.4.2 Aluminum insulation jacketing will be furnished and installed by others.

10.4.3 Vessels and associated piping will be electrically heat traced by others.

10.5 Painting

10.5.1 Vessel exteriors shall be **(deleted) painted according to the attached specification, 6007-ESP-ATP-00-60-N102 (Two Coat System for High Temperature Non-Primed Carbon Steel)** to prevent rust and corrosion during shipping and installation.

10.5.2 Painting vessel interiors is not required. See section 11.17 of this spec.

11. Fabrication

11.1 Any fabrication sub-contracted to others shall require written approval by Abener Teyma.

11.2 All vessels must meet the latest edition of the ASME Boiler and Pressure Vessel Code for shop practices, welding, and stress relieving.

1	11/13/12	Issued For Purchase	SMR	MZA	APF	
0	10/21/11	Issued For Quotes	WMP	MZA	APF	TS
No.	Date	Description	By	Chk'd	App'd	App'd

Information and know-how hereon are confidential and proprietary property of Abener Teyma Mojave General Partnership and may not be used, reproduced, or revealed to others except in accordance with the terms of a contract with or other written permission of Abener Teyma Mojave General Partnership.

11.3 Vessels requiring a Code Stamp must meet the latest edition of the ASME Boiler and Pressure Vessel Code for radiographing, and testing.

11.4 All plate and other material used in the execution of this work shall be new and clean stock, free from surface laminations and other physical imperfections.

11.5 All materials shall be identified throughout fabrication. Material certification shall be provided on request by the Abener Teyma inspector. Material certification test reports shall become a permanent record of the documentation package.

11.6 Machined surfaces which are warped or distorted due to welding, etc., shall be re-machined after these operations are finished, with minimum thickness maintained as specified. Machine surfaces shall be finished to the smoothness limit indicated on the design drawings.

11.7 The axis of any shell nozzle shall be radial and perpendicular to the longitudinal axis of the vessel. Flange face shall be perpendicular to the nozzle axis. All welds protruding beyond the flange face shall be ground flush.

11.8 Flange bolt holes of shell nozzles shall straddle the axial center line.

11.9 Vendor shall prepare the weld end nozzles end face in accordance with ASME B31.3 and ASME B16.25, to match the piping as indicated in the piping specification referenced in this specification. Abener Teyma shall review each weld end nozzle face prior to purging and protection for shipment. Vendor is to protect each weld end nozzle face against damage during handling and transporting.

11.10 All permanent attachments, stiffeners, clip angles, ring angles, etc., shall be joined to vessels by continuous welding, unless approved otherwise by Abener Teyma.

11.11 Remove all sharp edges and burrs.

11.12 All welds and surfaces exposed to vessel contents, its vapor or condensate shall be free of gouges, pits, cracks or other surface defects.

11.13 All welds and materials discovered to be non-compliant through inspection and/or testing shall be fully repaired at vendor's cost.

Information and know-how hereon are confidential and proprietary property of Abener Teyma Mojave General Partnership and may not be used, reproduced, or revealed to others except in accordance with the terms of a contract with or other written permission of Abener Teyma Mojave General Partnership.

11.14 Fabricated location and orientation of nozzles will be reviewed by Abener Teyma. If there are any discrepancies with project documents, the Vendor will make corrections.

11.15 Vendor shall notify Abener Teyma regarding any necessary repair work and have written approval before proceeding.

11.16 Vendor shall provide whatever additional treatment, such as preheat and/or post weld heating, as required for the material being used. Shop drawings must identify such treatments.

11.16.1 For any required heat treatment, Vendor shall provide written procedures for Abener Teyma review.

11.16.2 At completion, Vendor shall provide a Product Certification for PWHT, including a copy of time / temperature chart records.

11.17 To prevent contamination of the vessel contents, Vendor shall mechanically clean the interior surface of the vessel to remove all weld spatter, scale, rust, filings, dirt, etc., as well as all foreign materials.

11.17.1 Mechanical cleaning shall meet all requirements of NACE No. 3 (Commercial Blast Cleaning).

11.17.2 Vendor shall not commence mechanical cleaning until after all testing has been completed.

11.17.3 Vendor shall not commence mechanical cleaning until instructed by Abener Teyma to do so.

11.17.4 At the completion of mechanical cleaning, Vendor shall purge and seal the vessel with an inert gas to a minimum 2 psig.

(1) Warning signs shall be placed by Vendor on the vessel and manway clearly indicating the vessel has an inert gas seal that must be purged before entry.

(2) Method for sealing weld end nozzles shall minimize damage to weld end prep, and minimize any required weld end prep at the job site.

Information and know-how hereon are confidential and proprietary property of Abener Teyma Mojave General Partnership and may not be used, reproduced, or revealed to others except in accordance with the terms of a contract with or other written permission of Abener Teyma Mojave General Partnership.

(3) Sealing with inert gas shall include a pressure gauge that proves purge gas in the vessel. Pressure gauge is to stay with sealed vessel. Pressure gauge is to be protected from damage during shipment. Pressure gauge is to include shut off valve.

(4) **Apply water-soluble rust inhibitor during hydrotest, according to specification 6007-ESP-ATP-00-61-PS010.**

12. Inspection

12.1 Abener Teyma (or an inspector on their behalf) reserves the right to inspect the equipment at any time during the course of fabrication. Abener Teyma retains the right to provide personnel to observe all fabrication work within the scope of the contracted work (including testing and inspection). Such individuals shall be afforded full and free access for these purposes, subject to safety and schedule constraints.

12.2 Inspector means Abener Teyma (or an inspector on their behalf).

12.3 Inspector shall have free access, at all reasonable times, to the areas where the work on equipment is being performed. Vendor shall notify Abener Teyma purchasing department in advance (minimum one week) of scheduled vessel testing to allow time for the Inspector to arrange to be at the test site before testing begins.

12.4 Mill and shop inspection shall not release the Vendor from responsibility for replacing any defective material and for repairing any defective workmanship that may be discovered in the field.

12.5 Vendor's currently qualified welders and procedures under ASME Sec. IX, must be submitted to Inspector for approval. Additional qualifications necessary are to be at vendor's expense.

12.6 All vessels shall be inspected and tested according to the applicable code as listed in the vessel data sheets.

12.7 For any required radiographic examination, a certified copy of a written report confirming that the work was inspected as set forth herein shall be provided when specified. Refer to 6007-ESP-ATP-44-62-V208V Vendor Data Requirements. The report shall include the following:

Information and know-how hereon are confidential and proprietary property of Abener Teyma Mojave General Partnership and may not be used, reproduced, or revealed to others except in accordance with the terms of a contract with or other written permission of Abener Teyma Mojave General Partnership.

a. A summary of inspection of radiographs.
b. Identification of unacceptable radiographs and a statement of the action taken to rectify unsatisfactory welds.

12.8 Tell-tale holes shall be used to pneumatically test all welded attachments prior to hydrostatic testing. Tell-tale holes shall not be plugged during hydrostatic testing of the vessel.

12.9 Vendor shall submit letters of completion to Abener Teyma at least twenty days prior to the requested final inspection date. The equipment must be ready for inspection and the tests run prior to this final inspection request.

12.10 The cost of all tests due to code requirements or manufacturer's test requirements shall be fully borne by vendor.

12.11 A written certification of an acceptable hydrostatic test shall be completed by vendor. The certification shall be forwarded to the individual indicated on the Abener Teyma purchase order.

12.11.1 Asbestos or material containing asbestos shall not be used in the construction or manufacture of the equipment.

12.11.2 A stainless steel tag that includes the Project number, equipment Tag Number and the equipment Purchase Order number shall be fixed to all the associated equipment. The tag shall stand off the vessel, outside of the insulation. The location of the tag shall be determined during drawing review.

13. Shipping

13.1 All parts shall be skidded, boxed, or otherwise suitably prepared for shipment to protect against damage while in transit.

13.2 Vendor shall refer to specification 6007-ESP-ATP-00-60-G121 for shipping and preparation requirements.

14. Installation Information

14.1 The Vendor shall specify with quote any detailed installation requirements.

1	11/13/12	Issued For Purchase	SMR	MZA	APF	
0	10/21/11	Issued For Quotes	WMP	MZA	APF	TS
No.	Date	Description	By	Chk'd	App'd	App'd

Information and know-how hereon are confidential and proprietary property of Abener Teyma Mojave General Partnership and may not be used, reproduced, or revealed to others except in accordance with the terms of a contract with or other written permission of Abener Teyma Mojave General Partnership.

14.2 The Vendor shall include in their quotation one set of any special tools and wrenches required for installation and maintenance.

15. Startup, Training and Field Services

The Vendor shall state all startup, training and field services included in bid, clearly identifying duration, number of people, and specific services provided. The Vendor shall quote any additional assistance on a per diem rate.

16. Qualifications

The Vendor shall furnish equipment, designs, and materials that have been proven by successful operation for no less than five (5) years. Requests to use untried or unproven equipment, designs, or materials must be approved by the Purchaser in writing prior to incorporation into the purchase order.

17. Proposal Requirements

17.1 Vendor shall furnish a quote for the following equipment and services:

17.1.1 All engineering, design, equipment materials, labor, fabrication, testing, inspection, and shipping of the equipment.

17.1.2 All parts and accessories required for complete functional HTF Scrubbers.

17.1.3 Startup and commissioning spare parts with quantities.

17.1.4 Submittal of data as required in the Vendor Data Requirements Specification, 6007-ESP-ATP-44-62-V208V.

17.1.5 Start-up, training and commissioning, clearly identifying duration, number of people, and specific services included in bid. The Vendor shall quote any additional assistance on a per diem rate.

17.1.6 The Vendor shall separately quote one set of any special tools and wrenches required for maintenance.

Information and know-how hereon are confidential and proprietary property of Abener Teyma Mojave General Partnership and may not be used, reproduced, or revealed to others except in accordance with the terms of a contract with or other written permission of Abener Teyma Mojave General Partnership.

17.2 The Vendor's base quotation shall consist of the equipment and services identified herein. Pricing for Purchaser identified options shall be submitted as separate line items. Vendor identified alternatives may be submitted if system improvements and/or cost savings can be realized.

17.3 Comments and exceptions to the specification shall be listed in a separate part of the proposal titled "Exceptions to the Specification". All exceptions shall be listed in this section and shall reference the appropriate specification section. No other exceptions will be allowed. After the purchase order is awarded, the Vendor shall be responsible to satisfy all requirements of this specification except for the agreed upon exceptions. Any requirements that are not included with the Vendor's equipment and are in the equipment specification shall be furnished and installed at the Vendor's expense.

17.4 Vendor shall complete and return the Equipment Data Sheets with the proposal. Failure to submit these sheets will result in an incomplete proposal that may not be considered.

17.5 Vendor shall furnish dimensioned envelope drawings with the proposal. Drawing shall show the location of all connections, supports, estimated weights, and other pertinent data.

17.6 Vendor shall provide minimum clearances required for maintenance, service and operation of the scrubber and its components.

18. Attachments

6007-ESP-ATP-44-62-V208V	Vendor Data Requirements – HTF Scrubbers
6007-ESP-ATP-00-60-G100	Project Design Criteria
6007-ESP-ATP-00-60-G121	Shipping and Preparation Requirements
6007-ESP-ATP-68-61-CS72	Class 150 Carbon Steel
6007-ESP-ATP-68-61-CS30	Class 300 Carbon Steel
6007-ESP-ATP-00-60-N102	**Two Coat System for High Temperature Non-Primed Carbon Steel**
6007-ESP-ATP-00-60-N180	**Shop Applied Paint**
6007-INS-ATM-77-13-0002	**Annex 2 – Document List for Subcontractors and Suppliers**
6007-ESP-ATP-00-30-M100	**Electrical and Instrument Systems On Packaged Mechanical Equipment**
6007-INS-ATM-77-13-0002	**Annex 01 – Specification of Documentation to be sent by Subcontractors and Suppliers**
6007-ESP-ATP-00-61-PS010	**Material and Installation Standards Internal Pipe Cleaning**

1	11/13/12	Issued For Purchase	SMR	MZA	APF	
0	10/21/11	Issued For Quotes	WMP	MZA	APF	TS
No.	Date	Description	By	Chk'd	App'd	App'd

Information and know-how hereon are confidential and proprietary property of Abener Teyma Mojave General Partnership and may not be used, reproduced, or revealed to others except in accordance with the terms of a contract with or other written permission of Abener Teyma Mojave General Partnership.

Specification For HTF Scrubbers	Job No.: 120010	Spec. No.: 6007-ESP-ATP-44-62-V208
	Item No.: See Spec	No. Req'd.: 4
	Project: Mojave	
	Ref.:	Issue: 1 Dated : 11/13/12

HTF Overflow Tank Vent Scrubbers, A-MV-208 and B-MV-208

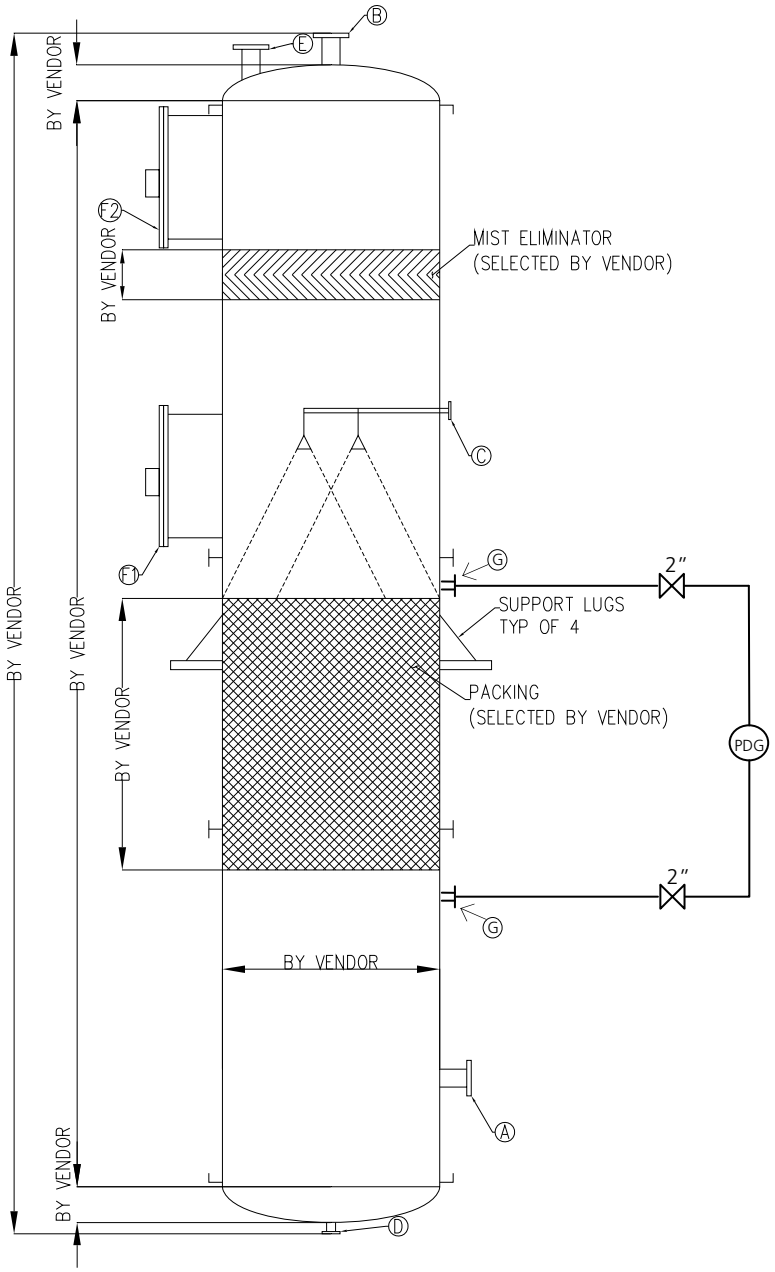

1	11/13/12	Issued For Purchase	SMR	MZA	APF	
0	10/21/11	Issued For Quotes	WMP	MZA	APF	TS
No.	Date	Description	By	Chk'd	App'd	App'd

Information and know-how hereon are confidential and proprietary property of Abener Teyma Mojave General Partnership and may not be used, reproduced, or revealed to others except in accordance with the terms of a contract with or other written permission of Abener Teyma Mojave General Partnership.

Specification For HTF Scrubbers	Job No.: 120010	Spec. No.: 6007-ESP-ATP-44-62-V208
	Item No.: See Spec	No. Req'd.: 4
	Project: Mojave	
	Ref.:	Issue: 1 Dated : 11/13/12

Data Sheets **Vendor: The Clean Air Group - Croll Reynolds Company (CRC)**

HTF OVERFLOW TANK VENT SCRUBBERS A-MV-208, B-MV-208	ABENER / TEYMA REQUIREMENT	CRC INFORMATION
TYPE	Packed Column	**Low Pressure Packed Column – 20T-16H**
DESIGN AND CONSTRUCTION		
Code:	ASME Sec. VIII Div. 1	**ASME Sec. VIII Div. 1**
Stamp:	Not Required	**Not Required**
Design Pressure: PSIG	2.5 / FV	**2.5 / FV**
Design Temperature: °F	350	**350**
Corrosion Allowance, in	0.0625 in	**0.0625 in**
Dimensions		
Inside Diameter, in.		**20"**
Shell Height, Tan to Tan, in.		**Nominally, 24.5 ft (294")**
Overall Height, In.		**Nominally, 26.5 ft (318")**
Head style / Flange height, in.		**Elliptical head / 10" nominally**
Shell Thickness, in.		**Nominally, 0.25"**
Head thickness, in.		**Nominally, 0.25"**
Vessel Volume, Ft^3		**21.8 ft^3**
Materials of Construction		
Shell	SA516-70	**SA516-70**
Head	SA516-70	**SA516-70**
Internal Supports	316 SS	**316SS**
Packing		
Height, in		**16 ft (192")**
Material / Type		**316SS / 1" High Flow**
Spray Nozzle		
Quantity		**4**
Type / Material	/ 316 SS	**Bete / 316SS**
Flow per Nozzle, gpm		**22**
Required Supply Pressure to Nozzle,PSIG		**Nominally, 10 psig**

1	11/13/12	Issued For Purchase	SMR	MZA	APF	
0	10/21/11	Issued For Quotes	WMP	MZA	APF	TS
No.	Date	Description	By	Chk'd	App'd	App'd

Information and know-how hereon are confidential and proprietary property of Abener Teyma Mojave General Partnership and may not be used, reproduced, or revealed to others except in accordance with the terms of a contract with or other written permission of Abener Teyma Mojave General Partnership.

Specification For HTF Scrubbers	Job No.: 120010	Spec. No.: 6007-ESP-ATP-44-62-V208
	Item No.: See Spec	No. Req'd.: 4
	Project: Mojave	
	Ref.:	Issue: 1 Dated : 11/13/12

Data Sheets **Vendor: The Clean Air Group - Croll Reynolds Company (CRC)**

HTF OVERFLOW TANK VENT SCRUBBERS A-MV-208, B-MV-208	ABENER / TEYMA REQUIREMENT	CRC INFORMATION
Mist Eliminator		
Height, in		**8" overall**
Material / Type		**316SS / Mesh**
Connections	Size / Type / Rating	
A - Gas Inlet, in.	6"/ RF Flg. / Per Code	**6"**
B - Gas Outlet, in.	**8**"/ RF Flg. / Per Code Top center of upper head	**8"**
C - HTF Spray connection, in	4"/ RF Flg./ Per Code	**4"**
D - HTF Condensate Outlet, in	4"/ RF Flg. / Per Code	**4"**
E - Safety Valve	2" /RF Flg / Per code	**2"**
F1 - Upper Manway, in ##	36"/ RF Flg. w/ davit / Per Code	**16"**
F2 - Lower Manway, in ##	36"/ RF Flg. w/ davit / Per Code	**16"**
G – Connections for PDG	2" /RF Flg / Per code	**2"**
Vessel Support Lugs, Qty.	4	**4**
Insulation Support Rings	Required	**Included**
Qty.		**12**
Dimensions		**1"**

Manway size subject to change based on vessel diameter.

Note: Differential Pressure Gauge Nozzles are supplied with isolation valves.

1	11/13/12	Issued For Purchase	SMR	MZA	APF	
0	10/21/11	Issued For Quotes	WMP	MZA	APF	TS
No.	Date	Description	By	Chk'd	App'd	App'd

Information and know-how hereon are confidential and proprietary property of Abener Teyma Mojave General Partnership and may not be used, reproduced, or revealed to others except in accordance with the terms of a contract with or other written permission of Abener Teyma Mojave General Partnership.

Specification For HTF Scrubbers	Job No.: 120010	Spec. No.: 6007-ESP-ATP-44-62-V208
	Item No.: See Spec	No. Req'd.: 4
	Project: Mojave	
	Ref.:	Issue: 1 Dated : 11/13/12

Data Sheets
HTF OVERFLOW TANK VENT SCRUBBERS
A-MV-208, B-MV-208

Vendor: The Clean Air Group - Croll Reynolds Company (CRC)

PERFORMANCE Minimum Concentration	ABENER / TEYMA REQUIREMENT Inlet Design	ABENER / TEYMA REQUIREMENT Outlet Design	CRC INFORMATION Inlet Design	CRC INFORMATION Outlet Design
Total Gas Flow Rate, lb/hr	949	854	**949**	**860.58**
Gas Flow, scfm:	214	201	**214**	**201**
Gas Flow, acfm:	260	208	**260**	**208**
Operating Temperature, °F:	240	120	**240**	**120**
Operating Pressure, psia:	17.2	17.2	**17.2**	**17.2**
Gas Enthalpy, Btu/lb	62.99	14.25	**62.99**	**14.25**
Gas Flow Composition:				
HTF, lb/hr	51.58	0.75	**51.58**	**0.74**
Benzene, lb/hr	46.11	8.15	**46.11**	**7.06**
Toluene, lb/hr	2.14	0.25	**2.14**	**0.24**
Phenol, lb/hr	1.88	0.05	**1.88**	**0.12**
Nitrogen, lb/hr	847	845	**847**	**852.41**
High Boilers, lb/hr	0.23	0.00	**0.23**	**0.01**
Total Low Boilers, lb/hr	50.13	8.46	**50.13**	**7.42**
Total Non-N_2, lb/hr	101.95	9.21	**101.95**	**8.44**
HTF Liquid Flow Rate, lb/hr	45,000	45,094	**45,000**	**45,088.42**
HTF Liquid Flow, GPM:	87.1	87.3	**87.1**	**87.3**
HTF Liquid Temperature, °F:	120	120	**120**	**122.5**
HTF Liquid Pressure, psia:	17.2	17.2	**17.2**	**17.2**
HTF Liquid Enthalpy, Btu/lb:	-162.9	-163.0	**-162.9**	**-163.0**
HTF / Liquid Flow Composition:				
HTF, lb/hr	44,169	44,220	**44,169**	**44,220.82**
Benzene, lb/hr	197	235	**197**	**236.05**
Toluene, lb/hr	19	21	**19**	**20.9**
Phenol, lb/hr	165	167	**165**	**166.77**
Nitrogen, lb/hr	10	11	**10**	**4.64**
High Boilers, lb/hr	439	440	**439**	**439.23**
Total Low Boilers, lb/hr	382	424	**382**	**423.92**
Total Non-N_2, lb/hr	44,990	45,083	**44,990**	**44,216.18**

No.	Date	Description	By	Chk'd	App'd	App'd
1	11/13/12	Issued For Purchase	SMR	MZA	APF	
0	10/21/11	Issued For Quotes	WMP	MZA	APF	TS

Information and know-how hereon are confidential and proprietary property of Abener Teyma Mojave General Partnership and may not be used, reproduced, or revealed to others except in accordance with the terms of a contract with or other written permission of Abener Teyma Mojave General Partnership.

Specification For HTF Scrubbers	Job No.: 120010	Spec. No.: 6007-ESP-ATP-44-62-V208
	Item No.: See Spec	No. Req'd.: 4
	Project: Mojave	
	Ref.:	Issue: 1 Dated : 11/13/12

Vendor: The Clean Air Group - Croll Reynolds Company (CRC)

Data Sheets
HTF OVERFLOW TANK VENT SCRUBBERS
A-MV-208, B-MV-208

PERFORMANCE Maximum Concentration	**Inlet Design**	**Outlet Design**	**Inlet Design**	**Outlet Design**
Total Gas Flow Rate, lb/hr	1,087	809	**1,087**	**811.58**
Gas Flow, scfm:	208	186	**208**	**186**
Gas Flow, acfm:	260	192	**260**	**169.5**
Operating Temperature, °F:	240	120	**240**	**120**
Operating Pressure, psia:	17.2	17.2	**17.2**	**17.2**
Gas Enthalpy, Btu/lb	142.93	32.04	**142.93**	**32.04**
Gas Flow Composition:				
HTF, lb/hr	45.11	0.60	**45.11**	**0.59**
Benzene, lb/hr	244.10	38.91	**244.10**	**33.8**
Toluene, lb/hr	13.38	1.41	**13.38**	**1.37**
Phenol, lb/hr	12.69	0.32	**12.69**	**0.72**
Nitrogen, lb/hr	770	768	**770**	**775.04**
High Boilers, lb/hr	1.57	0.02	**1.57**	**0.06**
Total Low Boilers, lb/hr	270.16	40.65	**270.16**	**35.89**
Total Non-N_2, lb/hr	316.85	41.26	**316.85**	**43.58**
HTF Liquid Flow Rate, lb/hr	45,000	45,278	**45,000**	**45,275**
HTF Liquid Flow, GPM:	87.3	87.9	**87.3**	**87.9**
HTF Liquid Temperature, °F:	120	120	**120**	**124.8**
HTF Liquid Pressure, psia:	17.2	17.2	**17.2**	**17.2**
HTF Liquid Enthalpy, Btu/lb:	-156.20	-154.83	**-156.20**	**-154.83**
HTF / Liquid Flow Composition:				
HTF, lb/hr	39,601	39,646	**39,601**	**39,644**
Benzene, lb/hr	1,070	1,275	**1,070**	**1,280**
Toluene, lb/hr	125	137	**125**	**137**
Phenol, lb/hr	1,143	1,155	**1,143**	**1,155**
Nitrogen, lb/hr	10	12	**10**	**4.96**
High Boilers, lb/hr	3,052	3,054	**3,052**	**3,053.44**
Total Low Boilers, lb/hr	2,337	2,567	**2,337**	**2,572**
Total Non-N_2, lb/hr	44,990	45,266	**44,990**	**45,270**

No.	Date	Description	By	Chk'd	App'd	App'd
1	11/13/12	Issued For Purchase	SMR	MZA	APF	
0	10/21/11	Issued For Quotes	WMP	MZA	APF	TS

Information and know-how hereon are confidential and proprietary property of Abener Teyma Mojave General Partnership and may not be used, reproduced, or revealed to others except in accordance with the terms of a contract with or other written permission of Abener Teyma Mojave General Partnership.

Specification For HTF Scrubbers	Job No.: 120010	Spec. No.: 6007-ESP-ATP-44-62-V208
	Item No.: See Spec	No. Req'd.: 4
	Project: Mojave	
	Ref.:	Issue: 1 Dated : 11/13/12

HTF Expansion Vessel Vent Scrubber, A-MV-209 and B-MV-209

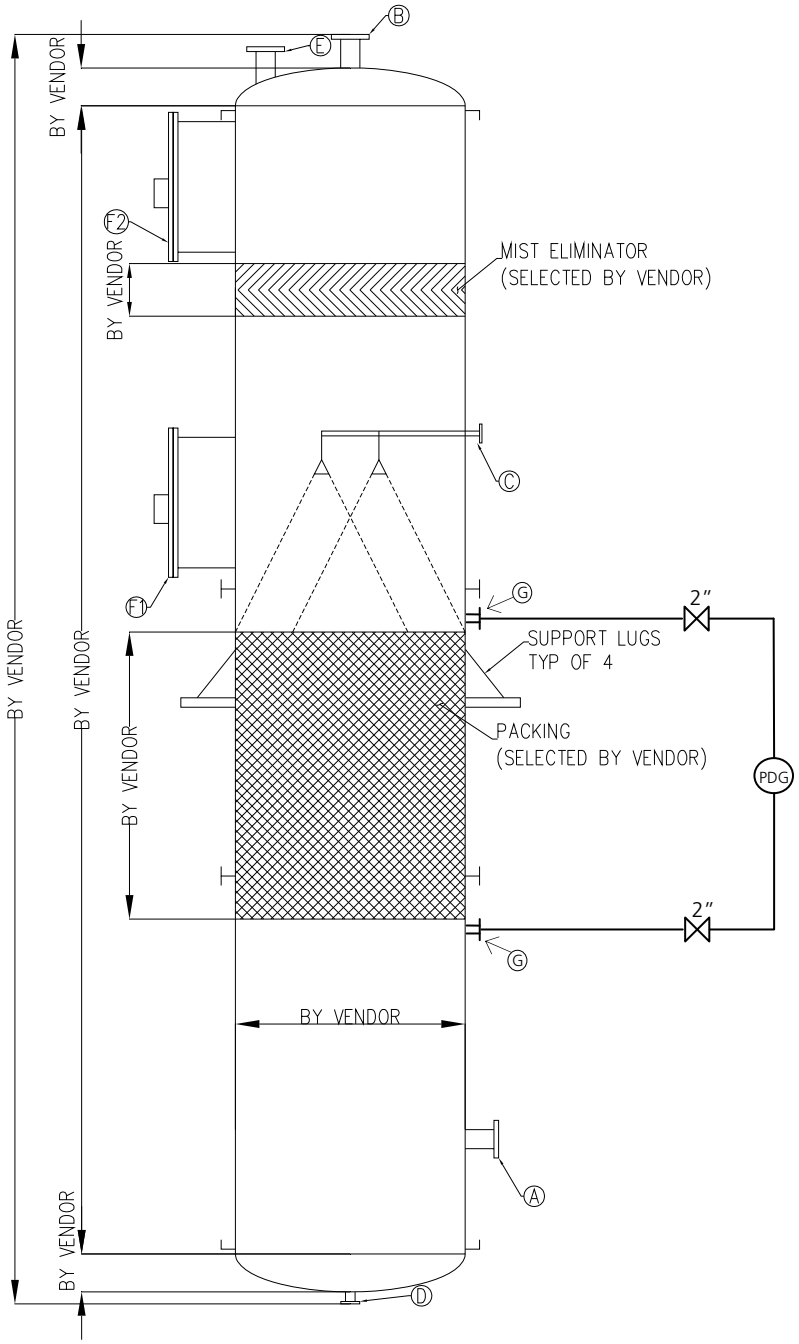

1	11/13/12	Issued For Purchase	SMR	MZA	APF	
0	10/21/11	Issued For Quotes	WMP	MZA	APF	TS
No.	Date	Description	By	Chk'd	App'd	App'd

Information and know-how hereon are confidential and proprietary property of Abener Teyma Mojave General Partnership and may not be used, reproduced, or revealed to others except in accordance with the terms of a contract with or other written permission of Abener Teyma Mojave General Partnership.

Specification For HTF Scrubbers	Job No.: 120010	Spec. No.: 6007-ESP-ATP-44-62-V208
	Item No.: See Spec	No. Req'd.: 4
	Project: Mojave	
	Ref.:	Issue: 1 Dated : 11/13/12

Data Sheets **Vendor: The Clean Air Group - Croll Reynolds Company (CRC)**

HTF EXPANSION VESSEL VENT SCRUBBERS A-MV-209, B-MV-209	ABENER / TEYMA REQUIREMENT	CRC INFORMATION
TYPE	Packed Column	**High Pressure Packed Column – 36T-16H**
DESIGN AND CONSTRUCTION		
Code:	ASME Sec. VIII Div. 1	**ASME Sec. VIII Div. 1**
Stamp:	Required	**Stamp Required**
Design Pressure: PSIG	200 / Full Vacuum	**200 / Full Vacuum**
Design Temperature: °F	650	**650**
Corrosion Allowance, in	0.0625 in	**0.0625 in**
Dimensions		
Inside Diameter, in.		**36"**
Shell Height, Tan to Tan, in.		**Nominally, 26.7 ft (320")**
Overall Height, In.		**Nominally, 30 ft (360")**
Head style / Flange height, in.		**Elliptical / 18" nominally**
Shell Thickness, in.		**0.25"**
Head thickness, in.		**0.25"**
Vessel Volume, Ft^3		**71 ft^3**
Materials of Construction		
Shell	SA516-70	**SA516-70**
Head	SA516-70	**SA516-70**
Internal Supports	316 SS	**316SS**
Packing		
Height, in		**16 ft (192")**
Material / Type		**316SS / 2" High Flow**
Spray Nozzle		
Quantity		**4**
Type / Material	/ 316 SS	**Bete / 316SS**
Flow per Nozzle,		**22**
Required Supply Pressure to Nozzle,PSIG		**Nominally, 10 psig**

No.	Date	Description	By	Chk'd	App'd	App'd
1	11/13/12	Issued For Purchase	SMR	MZA	APF	
0	10/21/11	Issued For Quotes	WMP	MZA	APF	TS

Information and know-how hereon are confidential and proprietary property of Abener Teyma Mojave General Partnership and may not be used, reproduced, or revealed to others except in accordance with the terms of a contract with or other written permission of Abener Teyma Mojave General Partnership.

Specification For HTF Scrubbers	Job No.: 120010	Spec. No.: 6007-ESP-ATP-44-62-V208
	Item No.: See Spec	No. Req'd.: 4
	Project: Mojave	
	Ref.:	Issue: 1 Dated : 11/13/12

Data Sheets **Vendor: The Clean Air Group - Croll Reynolds Company (CRC)**

HTF EXPANSION VESSEL VENT SCRUBBERS A-MV-209, B-MV-209	ABENER / TEYMA REQUIREMENT	CRC INFORMATION
Mist Eliminator		
Height, in		**8" overall**
Material / Type		**316SS / Mesh**
Connections	Size / Type / Rating	
A Gas Inlet, in.	6"/ RF Flg. / Per Code	**6"**
B Gas Outlet, in.	6"/ RF Flg. / Per Code Top center of upper head	**6"**
C HTF Spray connection, in	4"/ RF Flg./ Per Code	**4"**
D HTF Condensate Outlet, in	4"/ RF Flg./ Per Code	**4"**
E Safety Valve	4"/ RF Flg / Per code	**4"**
F1 Upper Manway, in ##	36"/ RF Flg. w/ davit / Per Code	**36"**
F2 Lower Manway, in ##	36"/ RF Flg. w/ davit / Per Code	**36"**
G – Connections for PDG	2" /RF Flg / Per code	**2"**
Vessel Support Lugs, Qty.	4	**4**
Insulation Support Rings	Required	**Required**
Qty.		**16**
Dimensions		**1"**

Manway size subject to change based on vessel diameter.

Note: Differential Pressure Gauge Nozzles are supplied with isolation valves.

1	11/13/12	Issued For Purchase	SMR	MZA	APF	
0	10/21/11	Issued For Quotes	WMP	MZA	APF	TS
No.	Date	Description	By	Chk'd	App'd	App'd

Information and know-how hereon are confidential and proprietary property of Abener Teyma Mojave General Partnership and may not be used, reproduced, or revealed to others except in accordance with the terms of a contract with or other written permission of Abener Teyma Mojave General Partnership.

Specification For HTF Scrubbers	Job No.: 120010	Spec. No.: 6007-ESP-ATP-44-62-V208
	Item No.: See Spec	No. Req'd.: 4
	Project: Mojave	
	Ref.:	Issue: 1 Dated : 11/13/12

Vendor: The Clean Air Group - Croll Reynolds Company (CRC)

Data Sheets **HTF EXPANSION VESSEL VENT SCRUBBERS** **A-MV-209, B-MV-209**	**ABENER / TEYMA REQUIREMENT**		**CRC INFORMATION**	
PERFORMANCE	**Inlet**	**Outlet**	**Inlet**	**Outlet**
Minimum Concentration at Design Flowrate	**Design**	**Design**	**Design**	**Design**
Total Gas Flow Rate, lb/hr	9,588	9,415	**9,588**	**9,495**
Gas Flow, scfm:	2,034	1,989	**2,034**	**1,989**
Gas Flow, acfm:	205	202	**205**	**205**
Operating Temperature, °F:	120	120	**120**	**120**
Operating Pressure, psig:	157	156	**157**	**156**
Gas Enthalpy, Btu/lb	13	9	**13**	**9**
Gas Flow Composition:				
HTF, lb/hr	0.97	0.91	**0.97**	**1.03**
Benzene, lb/hr	65.50	10.07	**65.50**	**9.36**
Toluene, lb/hr	1.92	0.29	**1.92**	**0.33**
Phenol, lb/hr	0.24	0.06	**0.24**	**0.16**
Nitrogen, lb/hr	9,520	9,404	**9,520**	**9,484**
High Boilers, lb/hr	0.00	0.00	**0.00**	**0.01**
Total Low Boilers, lb/hr	67.66	10.42	**67.66**	**9.85**
Total Non-N_2, lb/hr	68.63	11.34	**68.63**	**10.89**
HTF Liquid Flow Rate, lb/hr	45,000	45,173	**45,000**	**45,094.25**
HTF Liquid Flow, GPM:	87.1	87.8	**87.1**	**87.8**
HTF Liquid Temperature, °F:	120	120	**120**	**120**
HTF Liquid Pressure, psia:	174	171	**174**	**171**
HTF Liquid Enthalpy, Btu/lb:	-163	-194	**-163**	**-194**
HTF / Liquid Flow Composition:				
HTF, lb/hr	44,151	44,151	**44,151**	**44,150.67**
Benzene, lb/hr	211	267	**211**	**267.14**
Toluene, lb/hr	21	22	**21**	**22.59**
Phenol, lb/hr	171	171	**171**	**171.08**
Nitrogen, lb/hr	10	126	**10**	**45.77**
High Boilers, lb/hr	437	437	**437**	**437**
Total Low Boilers, lb/hr	403	460	**403**	**306.81**
Total Non-N_2, lb/hr	44,990	45,048	**44,990**	**44,895**

1	11/13/12	Issued For Purchase	SMR	MZA	APF	
0	10/21/11	Issued For Quotes	WMP	MZA	APF	TS
No.	Date	Description	By	Chk'd	App'd	App'd

Information and know-how hereon are confidential and proprietary property of Abener Teyma Mojave General Partnership and may not be used, reproduced, or revealed to others except in accordance with the terms of a contract with or other written permission of Abener Teyma Mojave General Partnership.

Specification For HTF Scrubbers	Job No.: 120010	Spec. No.: 6007-ESP-ATP-44-62-V208
	Item No.: See Spec	No. Req'd.: 4
	Project: Mojave	
	Ref.:	Issue: 1 Dated : 11/13/12

Vendor: The Clean Air Group - Croll Reynolds Company (CRC)

Data Sheets **HTF EXPANSION VESSEL VENT SCRUBBERS** **A-MV-209, B-MV-209** **PERFORMANCE**	**ABENER / TEYMA REQUIREMENT**		**CRC INFORMATION**	
	Inlet	**Outlet**	**Inlet**	**Outlet**
Maximum Concentration at Design Flowrate	**Design**	**Design**	**Design**	**Design**
Total Gas Flow Rate, lb/hr	8,589	8,277	**8,589**	**8,360.61**
Gas Flow, scfm:	1,797	1,748	**1,797**	**1,748**
Gas Flow, acfm:	182	177	**182**	**179.9**
Operating Temperature, °F:	120	120	**120**	**120**
Operating Pressure, psig:	157	157	**157**	**156**
Gas Enthalpy, Btu/lb	22	11	**22**	**11**
Gas Flow Composition:				
HTF, lb/hr	0.53	0.68	**0.53**	**0.78**
Benzene, lb/hr	225.52	42.14	**225.52**	**42.67**
Toluene, lb/hr	7.60	1.52	**7.60**	**1.77**
Phenol, lb/hr	1.01	0.35	**1.01**	**0.93**
Nitrogen, lb/hr	8,354	8,233	**8,354**	**8,314**
High Boilers, lb/hr	0.01	0.03	**0.01**	**0.08**
Total Low Boilers, lb/hr	234.13	44.01	**234.13**	**45.37**
Total Non-N_2, lb/hr	235	45	**235**	**46**
HTF Liquid Flow Rate, lb/hr	45,000	45,312	**45,000**	**45,228**
HTF Liquid Flow, GPM:	87.3	88.3	**87.3**	**88.3**
HTF Liquid Temperature, °F:	120	120	**120**	**121.8**
HTF Liquid Pressure, psia:	174	171	**174**	**170.89**
HTF Liquid Enthalpy, Btu/lb:	-156	-187	**-156**	**-187**
HTF / Liquid Flow Composition:				
HTF, lb/hr	39,503	39,503	**39,503**	**39,502.75**
Benzene, lb/hr	1,148	1,331	**1,148**	**1,330.85**
Toluene, lb/hr	133	139	**133**	**138.85**
Phenol, lb/hr	1,177	1,178	**1,177**	**1,177**
Nitrogen, lb/hr	10	131	**10**	**49.62**
High Boilers, lb/hr	3,029	3,029	**3,029**	**3,028.93**
Total Low Boilers, lb/hr	2,459	2,649	**2,459**	**2,646.78**
Total Non-N_2, lb/hr	44,990	45,180	**44,990**	**45,262.38**

1	11/13/12	Issued For Purchase	SMR	MZA	APF	
0	10/21/11	Issued For Quotes	WMP	MZA	APF	TS
No.	Date	Description	By	Chk'd	App'd	App'd

Information and know-how hereon are confidential and proprietary property of Abener Teyma Mojave General Partnership and may not be used, reproduced, or revealed to others except in accordance with the terms of a contract with or other written permission of Abener Teyma Mojave General Partnership.

Specification For HTF Scrubbers	Job No.: 120010	Spec. No.: 6007-ESP-ATP-44-62-V208
	Item No.: See Spec	No. Req'd.: 4
	Project: Mojave	
	Ref.:	Issue: 1 Dated : 11/13/12

Vendor: The Clean Air Group - Croll Reynolds Company (CRC)

Data Sheets **HTF EXPANSION VESSEL VENT SCRUBBERS** **A-MV-209, B-MV-209**	**ABENER / TEYMA REQUIREMENT**		**CRC INFORMATION**	
PERFORMANCE	**Inlet**	**Outlet**	**Inlet**	**Outlet**
Minimum Concentration at Normal Flowrate	**Design**	**Design**	**Design**	**Design**
Total Gas Flow Rate, lb/hr	5,724	5,571	**5,724**	**5,651.40**
Gas Flow, scfm:	1,214	1,180	**1,214**	**1,180**
Gas Flow, acfm:	123	119	**133.98**	**121.98**
Operating Temperature, °F:	120	120	**120**	**119.9**
Operating Pressure, psig:	157	156	**157**	**156**
Gas Enthalpy, Btu/lb	12.96	9.38	**12.96**	**9.38**
Gas Flow Composition:				
HTF, lb/hr	0.58	0.54	**0.58**	**0.61**
Benzene, lb/hr	40.52	5.21	**40.52**	**5.2**
Toluene, lb/hr	1.16	0.16	**1.16**	**0.18**
Phenol, lb/hr	0.14	0.03	**0.14**	**0.09**
Nitrogen, lb/hr	5,681	5,565	**5,681**	**5,645.32**
High Boilers, lb/hr	0.002	0.003	**0.002**	**0.01**
Total Low Boilers, lb/hr	41.83	5.40	**41.83**	**5.47**
Total Non-N_2, lb/hr	42.41	5.95	**42.41**	**5.68**
HTF Liquid Flow Rate, lb/hr	45,000	45,152	**45,000**	**45,071**
HTF Liquid Flow, GPM:	87.1	87.7	**87.1**	**87.3**
HTF Liquid Temperature, °F:	120	120	**120**	**120.3**
HTF Liquid Pressure, psig:	159	156	**159**	**156**
HTF Liquid Enthalpy, Btu/lb:	-163	-194	**-163**	**-194**
HTF / Liquid Flow Composition:				
HTF, lb/hr	44,169	44,169	**44,169**	**44,169**
Benzene, lb/hr	197	233	**197**	**232.32**
Toluene, lb/hr	19	20	**19**	**19.98**
Phenol, lb/hr	165	165	**165**	**165.05**
Nitrogen, lb/hr	10	125	**10**	**45.68**
High Boilers, lb/hr	439	439	**439**	**438.99**
Total Low Boilers, lb/hr	382	418	**382**	**417.35**
Total Non-N_2, lb/hr	44,990	45,027	**44,990**	**45,025.32**

1	11/13/12	Issued For Purchase	SMR	MZA	APF	
0	10/21/11	Issued For Quotes	WMP	MZA	APF	TS
No.	Date	Description	By	Chk'd	App'd	App'd

Information and know-how hereon are confidential and proprietary property of Abener Teyma Mojave General Partnership and may not be used, reproduced, or revealed to others except in accordance with the terms of a contract with or other written permission of Abener Teyma Mojave General Partnership.

Specification For HTF Scrubbers	Job No.: 120010	Spec. No.: 6007-ESP-ATP-44-62-V208
	Item No.: See Spec	No. Req'd.: 4
	Project: Mojave	
	Ref.:	Issue: 1 Dated : 11/13/12

Vendor: The Clean Air Group - Croll Reynolds Company (CRC)

Data Sheets **HTF EXPANSION VESSEL VENT SCRUBBERS** **A-MV-209, B-MV-209** **PERFORMANCE**	**ABENER / TEYMA REQUIREMENT**		**CRC INFORMATION**	
	Inlet	**Outlet**	**Inlet**	**Outlet**
Maximum Concentration at Normal Flowrate	**Design**	**Design**	**Design**	**Design**
Total Gas Flow Rate, lb/hr	5,111	4,871	**5,111**	**4,955**
Gas Flow, scfm:	1,069	1,029	**1,069**	**1,029**
Gas Flow, acfm:	108	104	**118**	**107**
Operating Temperature, °F:	120	120	**120**	**119.9**
Operating Pressure, psig:	157	156	**157**	**156**
Gas Enthalpy, Btu/lb	22.03	11.04	**22.03**	**11.04**
Gas Flow Composition:				
HTF, lb/hr	0.31	0.41	**0.31**	**0.46**
Benzene, lb/hr	137.20	22.20	**137.20**	**23.60**
Toluene, lb/hr	4.54	0.83	**4.54**	**0.99**
Phenol, lb/hr	0.60	0.20	**0.60**	**0.53**
Nitrogen, lb/hr	4,969	4,848	**4,969**	**4,929.69**
High Boilers, lb/hr	0.01	0.02	**0.01**	**0.05**
Total Low Boilers, lb/hr	142.34	23.23	**142.34**	**25.12**
Total Non-N_2, lb/hr	142.66	23.65	**142.66**	**25.31**
HTF Liquid Flow Rate, lb/hr	45,000	45,240	**45,000**	**45,157**
HTF Liquid Flow, GPM:	87.3	88.1	**87.3**	**87.8**
HTF Liquid Temperature, °F:	120	120	**120**	**121**
HTF Liquid Pressure, psig:	159	156	**159**	**156**
HTF Liquid Enthalpy, Btu/lb:	-156	-188	**-156**	**-188**
HTF / Liquid Flow Composition:				
HTF, lb/hr	39,601	39,601	**39,601**	**39,601**
Benzene, lb/hr	1,070	1,185	**1,070**	**1,183.6**
Toluene, lb/hr	125	129	**125**	**128.55**
Phenol, lb/hr	1,143	1,143	**1,143**	**1143.07**
Nitrogen, lb/hr	10	131	**10**	**49.37**
High Boilers, lb/hr	3,052	3,052	**3,052**	**3,051.96**
Total Low Boilers, lb/hr	2,337	2,456	**2,337**	**2,455.26**
Total Non-N_2, lb/hr	44,990	45,109	**44,990**	**45,108**

1	11/13/12	Issued For Purchase	SMR	MZA	APF	
0	10/21/11	Issued For Quotes	WMP	MZA	APF	TS
No.	Date	Description	By	Chk'd	App'd	App'd

Information and know-how hereon are confidential and proprietary property of Abener Teyma Mojave General Partnership and may not be used, reproduced, or revealed to others except in accordance with the terms of a contract with or other written permission of Abener Teyma Mojave General Partnership.

Specification For HTF Expansion Vessels	Job No.: 120010	Spec. No.: 6007-ESP-ATP-58-62-V200
	Item No.: See Spec	No. 8
	Project: Mojave	
	Ref.:	Issue: 2 Dated : 6-March-12

Instructions:

1. Initialing (By/Chk'd/App'd) required on cover sheet only. All other title block information must be included on all pages.

2. Revisions are identified in the body of the Specification.

Rev. No.	Date	By	Chk'd	App'd	Description of Revision Including Page Numbers
0	9 Sept 11	JOA	HED/MZA	TS/APF	For Bid
1	11 Oct 11	HED	MZA	TS/APF	Addition 6007-ESP-ATP-58-62-V200D (pages: 3, 6, 15)
2	**06 March 12**	**RGTD**	**MZA**	**APF**	**General revision. Pages 3, 4, 5, 6, 8, 9, 10, 12, 14, 18, 21, 22**

2	06-Mar-2012	General revision	RGTD	MZA	APF	
1	11-Oct-2011	Addition 6007-ESP-ATP-58-62-V200D (pages: 3, 6, 15)	HED	MZA	TS	APF
0	9-Sept-2011	For Bid	JAO	HED/ MZA	TS	APF
No.	Date	Description	By	Chk'd	App'd	App'd

Information and know-how hereon are confidential and proprietary property of Abener Teyma Mojave General Partnership and may not be used, reproduced, or revealed to others except in accordance with the terms of a contract with or other written permission of Abener Teyma Mojave General Partnership.

Specification For HTF Expansion Vessels	Job No.: 120010	Spec. No.: 6007-ESP-ATP-58-62-V200
	Item No.: See Spec	No. 8
	Project: Mojave	
	Ref.:	Issue: 2 Dated : 6-March-12

1. Project description

A new 280 MW solar power plant will be constructed at a "greenfield" site near Hinkley, California. Heat transfer fluid (HTF) will be circulated, transferring heat energy from the solar collection fields to the power generation system.

2. General

2.1 This specification covers the minimum requirements for furnishing drawings, design, all materials, equipment, tools, accessories, labor and supervision, necessary for fabrication, assembly, testing, inspections, and shipping of process pressure vessels, as specified herein.

2.2 Definitions: Vendor means "Vessel Design and Fabrication Vendor" for which this specification is intended. Purchaser shall mean "Abener Teyma Mojave General Partnership". Owner shall mean "Mojave Solar LLC".

2.3 The attachments identified are part of this specification. All specifications and attachments shall be met and followed by the Vendor in full.

3. Function

The HTF Expansion Vessels allow for the change in volume of the HTF due to the thermal expansion and contraction of the fluid. The vessels are pressurized with nitrogen to provide sufficient pressure throughout the HTF recirculation loop to both blanket the stored HTF and prevent the HTF from vaporizing/flashing.

4. Operation

The vessels will be filled and emptied daily. The vessels will experience pressure and temperature cycles daily. The vessels and all associated components shall be designed to operate continuously, year round.

5. Location

The vessels will be located outdoors. The equipment shall meet all the design conditions including the seismic and climatic conditions in this specification. See attached specification 6007-ESP-ATP-00-60-G100 Project Design Criteria for site specific information.

2	06-Mar-2012	General revision	RGTD	MZA	APF	
1	11-Oct-2011	Addition 6007-ESP-ATP-58-62-V200D (pages: 3, 6, 15)	HED	MZA	TS	APF
0	9-Sept-2011	For Bid	JAO	HED/ MZA	TS	APF
No.	Date	Description	By	Chk'd	App'd	App'd

Information and know-how hereon are confidential and proprietary property of Abener Teyma Mojave General Partnership and may not be used, reproduced, or revealed to others except in accordance with the terms of a contract with or other written permission of Abener Teyma Mojave General Partnership.

6. Scope

6.1 Vendor shall furnish four (4) vessels per Alpha Plant and four (4) vessels per Beta Plant, refer to 6007-ESP-ATP-58-62-V200D, HTF Expansion Vessels data sheets, attached to this package.

6.2 Vendor shall furnish all the vessels complete as shown on data sheets and as noted herein and shall included all necessary blind flanges, studs, nuts, bolts, clips, lifting lugs, davits, and gaskets.

6.3 All vessels, with physical dimensions within the allowable limits for shipping, shall be completely shop fabricated and tested before shipment. **Tests shall include, but not limited to, 100% radiographed welds, fully heat treated for stress relieving and test pressure.**

6.4 Shop fabricated vessels shall include lifting lugs and tailing lugs, designed by vendor to include the weight of the insulation and jacket, for use in loading, unloading, and field erection of vessel. Empty weight shall be marked on the vessel by using lettering no less than 6 inches high. **Vendor shall include 2 nameplates (one in the tank and one in the skirt) placed at a visible height indicating the following: Item tag number, design code, fabricated by, fabrication number and date, final client name, fluid inside, erection weight and capacity, design pressure and temperature, test pressure and periodic test pressure, inspect stamp, stress relieving, percentage of welds radiographed and purchase order or contract number. The nameplate placed in the tank shall be welded to a bracket which is welded to the tank with a projection of 8 inches (insulation thickness), the nameplate itself will be a 8x10" plate with a thickness of 3/25 inches in stainless steel. The nameplate placed in the skirt shall be welded to the skirt prior to painting.**

6.5 **All welds in the tanks shall be 100% radiographed and fully heat treated for stress relieve.**

6.6 Anchor bolt size and quantity shall be as specified by Vendor. Vendor shall provide anchor bolt **material,** drawings and loading diagrams for foundation design. **Anchor bolts shall be in galvanized steel and shall be provided by Vendor.**

6.7 Vendor shall provide support skirt for vertical vessels. Support geometry shall be coordinated with the Abener Teyma to allow for pipe routing and skirt access. **All internal supports (if needed) for the skirt itself shall also be provided by Vendor. The internal supports shall be placed to allow access and insulation of the tank bottom.**

6.8 Vendor shall include piping from bottom nozzle to skirt perimeter. End of pipe shall extend minimum 6 inches past outside surface of skirt. Skirt openings for piping shall have a 1/2 in. minimum clearance between the pipe OD, including insulation, and the skirt. **All other piping**

Information and know-how hereon are confidential and proprietary property of Abener Teyma Mojave General Partnership and may not be used, reproduced, or revealed to others except in accordance with the terms of a contract with or other written permission of Abener Teyma Mojave General Partnership.

connections shall have, as minimum, a projection of 10 inches, to assure that the piping will protrude out of the 8 inches insulation.

6.9 **Vendor shall provide supports to the piping from bottom nozzle to allow piping growth through the skirt perimeter as is shown in the data sheet 6007-ESP-ATP-58-62-V200D.**

6.10 A single skirt access manway, of 24 in. diameter, shall be provided in each skirt Bottom of access opening shall be 18 inches above skirt base. No piping shall pass through access openings. **Access shall be a 24 in pipe opening. Vendor shall provide adequate top handle inside the skirt and appropriate ladder rungs**.

6.11 **Vendor shall provide a single 24 in manway placed in the tank shell, near to the bottom tangent. Access opening shall have a flanged cover with davit. Vendor shall provide adequate top handle inside the shell and appropriate ladder rungs. Vendor shall also provide exterior ladder and platform to assure a safety access to the manway.**

6.12 At least six vents shall be provided in skirt. The vents shall be minimum NPS 6, Schedule 80 and shall be equally spaced at a maximum of 6 ft around the skirt circumference. **Vents shall be fully open access**.

6.13 Each vessel shall include four stainless steel grounding lugs. Grounding lugs shall be a minimum of 3" wide x 3" tall x ½" thick plate, and shall be made of 304 grade stainless steel. The grounding lugs shall be drilled to match "Burndy Qiklug" type "QA28-2N" which utilizes NEMA bolt spacing. Grounding lugs shall be welded to the skirt 12" above the base foundation flange.

6.14 Each vessel shall include insulation support rings. For each vessel, their shall be 7 rings, each extending 5 inches beyond the shell circumference , evenly spaced at maximum 9 feet, starting near the bottom tangent. Spacing should be in 3 foot increments. Top ring should be near the top tangent. Rings can be segmented and detachable for shipment. Any attachment brackets shall be continuously welded to the vessel.

6.15 **Vessels shall be designed for 200 PSIG and full vacuum. Vendor shall provide vacuum rings. Vacuum rings shall be also used as an insulation support ring, however, an insulation support ring shall not be used as a vacuum ring.**

6.16 Each vessel shall include insulation support pins welded to the heads. Pins are to be #10 ga. (3.6mm) weld pins on 12" centers. The companion 2-1/2" square speed clips shall be shipped with the vessel. The pins shall be carbon steel **and shall be length compatible with the insulation thickness of 8"**.

2	06-Mar-2012	General revision	RGTD	MZA	APF	
1	11-Oct-2011	Addition 6007-ESP-ATP-58-62-V200D (pages: 3, 6, 15)	HED	MZA	TS	APF
0	9-Sept-2011	For Bid	JAO	HED/ MZA	TS	APF
No.	Date	Description	By	Chk'd	App'd	App'd

Information and know-how hereon are confidential and proprietary property of Abener Teyma Mojave General Partnership and may not be used, reproduced, or revealed to others except in accordance with the terms of a contract with or other written permission of Abener Teyma Mojave General Partnership.

6.17 **Each vessel shall include four welded reinforcing pads 12" x 12" on the vessel top head for attachment or pipe supports. Pads and clips shall be designed and reinforced to accommodate the following combined loads:**

6.17.1 **Downward Load: 10,000 lb.**

6.17.2 **Bending Moment (+/- radial to center of vessel): 100,000 ft*lb.**

6.17.3 **Bending Moment (+/- tangential): 100,000 ft*lb.**

6.18 **Vendor shall provide reinforcing pads and clips to support vertical piping attached to the vessel shell.**

6.19 **Vendor shall provide a vortex breaker for the connection located at the bottom of the HTF expansion vessels.**

6.20 Vendor shall provide a foundation template that matches the anchor bolt pattern on vessel skirt. Template shall be sturdy steel construction. Template can be either one piece or multi piece bolted construction. For multi piece bolted assembly, the sections should include a pin and hole arrangement to assure proper alignment and tolerances. One template will be re-used for each of the vessel foundations. Template shall be delivered to job site within 6 weeks of anchor bolt arrangement approval.

6.21 For the HTF Expansion Vessels, refer to data sheets within this specification. For the HTF Flash Expansion Vessels, refer to data sheets within this specification. **Vendor should complete the data sheet at the end of this specification and submit it with the proposal.**

6.22 Each Flash Expansion Vessel shall include an internal stand pipe. The stand pipe shall be fully welded to the inside of the bottom head. The stand pipe shall be designed to retain the static head if full of HTF with zero level of HTF outside the stand pipe. The stand pipe shall be designed to retain the static head if full of HTF outside the stand pipe and zero level of HTF inside the stand pipe. The stand pipe shall be designed to resist seismic loading when full of HTF with zero level of HTF outside of the stand pipe. The stand pipe shall include 2 times the corrosion allowance as specified on the data sheet. The stand pipe shall be provided with four (4) ½" diameter holes located 6" above the bottom of the stand pipe. These holes are for static leveling between the vessel and stand pipe. The stand pipe shall be provided with one (1) ½" diameter hole located at the bottom of the stand pipe next to the vessel head, to allow for complete drainage of the vessel. **See 6007-HDD-ATP-58-62-C103 Data sheet for Therminol VP-1 for the HTF properties.**

Information and know-how hereon are confidential and proprietary property of Abener Teyma Mojave General Partnership and may not be used, reproduced, or revealed to others except in accordance with the terms of a contract with or other written permission of Abener Teyma Mojave General Partnership.

6.23 Each Flash Expansion Vessel shall be provided with an internal spray shield. The spray shield is to prevent extreme thermal gradients in the shell where the HTF in the vessel is warmer than the HTF cooling spray injected into the vessel. The spray shield shall have an OD 4" smaller than the ID of the vessel. The spray shield shall be permanently attached to the top head via welding. The attachments shall be clips that allow open space (minimum 2" gap) between the top head and the spray shield. A 2" gap between the spray shield and vessel is to be maintained. The open space is to allow vapor to escape when the liquid level exceeds the bottom of the spray shield. The spray shield shall be a minimum of 5/16" thick.

6.24 On the Flash Expansion Vessel, the manway cover shall be provided with a nozzle pipe welded through the center of the cover. This pipe shall have prepped weld ends inside and outside the vessel. The pipe shall extend 6" either side of the manway cover. Vendor shall weld a spray head to the inside end of the nozzle pipe **and shall provide it according the following:**

6.24.1 **Supplier: BETE.**

6.24.2 **Model: TC1480W.**

6.24.3 **Material: 316 stainless steel.**

6.24.4 **Characteristics: 8 inches, schedule 40, operating flow = 1,370,000 lb/h, BW, maximum recommended differential pressure = 60 PSI, design temperature = 750 ºF.**

6.25 On nozzles with weld end prep, the thicker nozzle on the vessel will need to be taper bored by the vendor to match the mating field pipe inside diameter.

7. Codes and standards

7.1 The requirements of ASME Sec VIII Division 1 are to be fully adhered to by Vendor for the complete project. "Code" as referenced herein, shall mean ASME Sec VIII Division 1, unless indicated otherwise.

7.2 The building codes for the site are those approved by San Bernardino County, California, and the California Energy Commission, and include their local amendments and additions to the following:

7.2.1 CBC – California Building Standards Code – Title 24, California Code of Regulations

7.2.2 IMC – International Mechanical Code - 2006

2	06-Mar-2012	General revision	RGTD	MZA	APF	
1	11-Oct-2011	Addition 6007-ESP-ATP-58-62-V200D (pages: 3, 6, 15)	HED	MZA	TS	APF
0	9-Sept-2011	For Bid	JAO	HED/ MZA	TS	APF
No.	Date	Description	By	Chk'd	App'd	App'd

Information and know-how hereon are confidential and proprietary property of Abener Teyma Mojave General Partnership and may not be used, reproduced, or revealed to others except in accordance with the terms of a contract with or other written permission of Abener Teyma Mojave General Partnership.

7.3 The following codes, standards, regulations, and guides are to be referred to by Vendor as guidelines for this project. As deemed appropriate by the Vendor, additional codes and regulations not mentioned below shall be followed based on prudent design practice.

7.3.1 AISC – American Institute for Steel Construction

7.3.2 AISI – American Iron and Steel Institute

7.3.3 ANSI – American National Standards Institute

7.3.4 ASME – American Society of Mechanical Engineers

7.3.5 ASNT – American Society for Nondestructive Testing

7.3.6 ASTM – American Society for Testing and Materials

7.3.7 AWS – American Welding Society

7.3.8 IBC - International Building Code 2006

7.3.9 ISO - International Standardization Organization

7.3.10 NFPA – National Fire Protection Agency

7.3.11 SSPC – Society for Protective Coatings

7.3.12 Occupational Safety and Health Administration Federal laws, statutes, regulations, ordinances and inspections.

7.3.13 Codes, laws, statutes, and regulations, ordinances and inspections, for the State, County, and Local Governments.

7.4 Should there be any conflict between applicable codes, standards of practice, specifications, or vendor's recommendations noted herein and those of the locality of the project, the more stringent code shall apply.

8. Engineering & Design

8.1 Vendor shall provide all engineering services required to fulfill the obligations of this contract.

8.2 Vendor shall provide engineering drawings and calculations for approval prior to the start of fabrication.

8.2.1 Refer to and comply with specification 6007-ESP-ATP-58-62-V200V, Vendor Data Requirements Heat Transfer Fluid Expansion Vessels, attached to this package.

Information and know-how hereon are confidential and proprietary property of Abener Teyma Mojave General Partnership and may not be used, reproduced, or revealed to others except in accordance with the terms of a contract with or other written permission of Abener Teyma Mojave General Partnership.

8.2.2 Approval of Vendor's drawings and calculations is limited to verifying general compliance with specifications and design drawings, and does not imply verification of dimensions, quantities, or calculations. Vendor is not relieved from responsibility for accurate dimensioning, equipment sizing, fabrication to required tolerances, and fabrication fit-up.

8.2.3 Engineering units indicated shall be U.S. customary. Volumes shall be indicated in gallons.

8.2.4 Drawings:

8.2.4.1 A general arrangement drawing shall be furnished for each vessel, and shall contain the data shown in 6007-ESP-ATP-58-62-V200D. The location of the vessel marking or nameplate, the size and orientation of all nozzles and connections, and the anchor bolt layout shall also be shown on this drawing. **Drawing shall include the insulation thickness (supplied by others) in order to show the appropriate projection of the nozzles.**

8.2.4.2 A separate outline drawing for each vessel shall be furnished with appropriate markings to cross-reference each component (shell plates, heads, nozzles, flanges, forgings, skirt plates, etc.) to the applicable mill test certificates for the steels used in the construction.

8.2.4.3 Vendor shall provide all drawings that are issued for fabrication, sealed by a licensed Professional Engineer who is legally authorized to practice in the State of California.

8.2.4.4 Fabrication drawings shall show weld details and shall reference applicable welding procedures. The drawings shall also include impact test requirements, showing (as applicable):

8.2.4.4.1 Component

8.2.4.4.2 Thickness for impact purposes

8.2.4.4.3 Material specification

8.2.4.4.4 Critical Exposure Temperature

8.2.4.4.5 Minimum Design Metal Temperature

8.2.4.4.6 Appropriate Charpy impact requirements (average/minimum values)

Information and know-how hereon are confidential and proprietary property of Abener Teyma Mojave General Partnership and may not be used, reproduced, or revealed to others except in accordance with the terms of a contract with or other written permission of Abener Teyma Mojave General Partnership.

8.2.5 Data and Calculations

8.2.5.1 Design calculations (including lifting attachments and supports) made by the Vendor shall be furnished prior to or along with submission of drawings for approval. When calculations are made using a computer, all input data, assumptions, computer program version used, and a summary of the results shall be furnished.

8.2.5.2 Vendor shall provide their structural calculation package, sealed by a licensed Professional Engineer who is legally authorized to practice in the State of California.

8.3 Vessels shall be designed for a minimum 30 year life.

8.4 Vessels shall be designed to withstand internal or external pressure and mechanical loads induced by vessel dead load, process, contents, earthquake, wind and other specified loadings. Wind and earthquake loads shall be in accordance with the Project Design Criteria described in Specification 6007-ESP-ATP-00-62-G100. Load combinations must be appropriately considered. Record design calculations are required.

8.5 The minimum insulation design load shall be for **8**" thickness on heads and shell using 8 lb / ft^3 mineral wool insulation with aluminum jacket.

8.6 Materials of construction shall be per this specification and the attached data sheet. In the event of conflict between parts of this specification and the attached data sheet, the vessel data sheet shall govern the requirements. Where materials of construction are not specified, Vendor shall propose materials for each item as appropriate for the service conditions.

8.7 All materials purchased by Vendor shall meet nationally recognized standards unless otherwise approved by Abener Teyma.

8.8 All materials shall be compatible with the vessel contents and in accordance with all applicable welding procedures.

8.9 Copies of mill test reports for materials shall be provided to Abener Teyma by Vendor.

8.10 The design shall be such to avoid any corrosion of vessel equipment.

8.11 The design shall be such to avoid any contamination of the vessel contents once the vessel is put into service.

8.12 The layout of weld seams shall be such that it will allow full access for inspection. Circumferential seams shall not be located within a distance of 1-1/2" of any external

Information and know-how hereon are confidential and proprietary property of Abener Teyma Mojave General Partnership and may not be used, reproduced, or revealed to others except in accordance with the terms of a contract with or other written permission of Abener Teyma Mojave General Partnership.

compression ring, internal ring, support ring, etc. Nozzles and manholes shall not intersect any weld seams, unless approved by Abener Teyma.

8.13 All manway covers shall be equipped with davits.

8.14 Vendor shall provide corrosion allowances as specified by the data sheets.

8.15 The minimum required thickness of plate and other structural members shall be that which is necessary to satisfy tension and compression strength requirements for the specified design conditions, without inclusion of corrosion allowance.

8.16 All nozzles shall be flush with the inside surface of the vessel wall, unless otherwise specified.

8.17 Nozzle flanges and manway flanges shall be the material as indicated on the Data Sheet.

8.18 Internal bolting is not allowed.

8.19 Nozzles shall not be located in vessel plate weld seams, unless prior approval has been given by Abener Teyma.

8.20 Vessel shall be designed for daily cyclic operation, 450 cycles per year, 30 year life cycle.

8.20.1 Vendor shall include Cyclic Analysis in their design. Vendor shall provide Cyclic Analysis calculations with other design calculations for Abener Teyma approval.

8.20.2 Cyclic operating conditions are**:** Daily cycle of filling from low level at bottom tangent point (118 psig at 392°F) to level at 90% of straight side height (177 psig at 560°F), and back to low level (118 psig at 392°F) .

8.21 Vessel design shall also be capable of a liquid level at the top tangent line operating with HTF at 100°F with nitrogen blanket at 15 psig.

8.22 Vendor to indicate on project drawings the maximum allowable loads on nozzles. **Nozzles shall be designed for a minimum of the loads as indicated for the CL300 in the specification 6007-ESP-ATP-00-G130 and showed bellow:**

	Force (pounds)		Moments (foot pounds)	
Nozzle Size (NPS)	**Sum**	**Force**	**Sum**	**Force**
3 and smaller	**750**	**428**	**1500**	**855**
4	**1400**	**800**	**2500**	**1425**
6	**2000**	**1140**	**6000**	**3425**
8	**2800**	**1600**	**12000**	**6850**
10	**3700**	**1850**	**16000**	**9120**
12	**4600**	**2625**	**25000**	**14250**

2	06-Mar-2012	General revision	RGTD	MZA	APF	
1	11-Oct-2011	Addition 6007-ESP-ATP-58-62-V200D (pages: 3, 6, 15)	HED	MZA	TS	APF
0	9-Sept-2011	For Bid	JAO	HED/ MZA	TS	APF
No.	Date	Description	By	Chk'd	App'd	App'd

Information and know-how hereon are confidential and proprietary property of Abener Teyma Mojave General Partnership and may not be used, reproduced, or revealed to others except in accordance with the terms of a contract with or other written permission of Abener Teyma Mojave General Partnership.

36	15,000	8,660	120,000	70,000
42	15,000	8,660	120,000	70,000

Example: NPS-3 nozzle would be subjected to simultaneous loads of F_{axial}= 428. lbs, F_{radial}= 428. lbs, $F_{circumferential}$= 428. lbs, and M_{axial}= 855. ft-lbs, $M_{circumferential}$= 855. ft-lbs, M_{radial}= 855. ft-lbs

9. Fabrication

9.1 Any fabrication shall not be sublet to others without the written approval of Abener Teyma.

9.2 All vessels must meet the latest edition of the code indicated on the data sheets for shop practices, welding, stress relieving, radiographing, and testing.

9.3 All plate and other material used in the execution of this work shall be new and clean stock, free from surface laminations and other physical imperfections.

9.4 All materials shall be identified throughout fabrication. Material certification shall be provided on request by the Abener Teyma inspector. Material certification test reports shall become a permanent record of the documentation package.

9.5 Machines surfaces which are warped or distorted due to welding, etc., shall be re-machined after these operations are finished, with minimum thickness maintained as specified. Machine surfaces shall be finished to the smoothness limit indicated on the design drawings.

9.6 The axes of any shell nozzle shall be radial and perpendicular to the longitudinal axis of the vessel. Flange face shall be perpendicular to the nozzle axis. All welds protruding beyond the flange face shall be ground flush.

9.7 Flange bolt holes of shell nozzles shall straddle the axial center line.

9.8 Vendor shall prepare the weld end nozzles end face in accordance with ASME B31.3 and ASME B16.25, to match the piping as indicated in the piping specification referenced in this specification. Abener Teyma shall review each weld end nozzle face prior to purging and protection for shipment. Vendor is to protect each weld end nozzle face against damage during handling and transporting.

9.9 All permanent attachments, stiffeners, clip angles, ring angles, etc., shall be joined to vessels by continuous welding, unless approved otherwise by Abener Teyma.

Information and know-how hereon are confidential and proprietary property of Abener Teyma Mojave General Partnership and may not be used, reproduced, or revealed to others except in accordance with the terms of a contract with or other written permission of Abener Teyma Mojave General Partnership.

9.10 Remove all sharp edges and burrs.

9.11 All welds and surfaces exposed to vessel contents, its vapor or condensate shall be free of gouges, pits, cracks or other surface defects.

9.12 All welds and materials discovered to be non-compliant through inspection and/or testing shall be fully repaired at vendor's cost.

9.13 Fabricated location and orientation of nozzles will be reviewed by Abener Teyma. If there are any discrepancies with project documents, the Vendor will make corrections.

9.14 Vendor shall notify Abener Teyma regarding any necessary repair work and have written approval before proceeding.

9.15 Vendor shall provide whatever additional treatment, such as preheat and/or post weld heating, as required for the material being used. Shop drawings must identify such treatments.

9.15.1 For any required heat treatment, Vendor shall provide written procedures for Abener Teyma review.

9.15.2 At completion, Vendor shall provide a Product Certification for PWHT, including a copy of time / temperature chart records.

9.16 To prevent contamination of the vessel contents, Vendor shall mechanically clean the interior surface of the vessel to remove all weld spatter, scale, rust, filings, dirt, etc., as well as all foreign materials.

9.16.1 Mechanical cleaning shall meet all requirements of NACE No. 3 (Commercial Blast Cleaning).

9.16.2 Vendor shall not commence mechanical cleaning until after all testing has been completed.

9.16.3 Vendor shall not commence mechanical cleaning until instructed by Abener Teyma to do so.

9.16.4 At the completion of mechanical cleaning, Vendor shall purge and seal the vessel with an inert gas.

9.16.4.1 Warning signs shall be placed by Vendor on the vessel and manway clearly indicating the vessel has an inert gas seal that must be purged before entry.

9.16.4.2 Warning signs shall be placed by Vendor on the vessel and manway clearly indicating the vessel has storage desiccant inside that must be removed

Information and know-how hereon are confidential and proprietary property of Abener Teyma Mojave General Partnership and may not be used, reproduced, or revealed to others except in accordance with the terms of a contract with or other written permission of Abener Teyma Mojave General Partnership.

prior to start-up. **The desiccant should be placed in a hook under the manway cover to make the desiccant removal easier.**

9.16.4.3 An acceptable method for sealing weld end nozzles is with a flat plate welded to pipe end, in a manner that will minimize any damage to the weld end prep. We want to minimize any weld end prep required at the job site.

9.16.4.4 Sealing with inert gas shall include a pressure gauge that proves purge gas in the vessel. Pressure gauge is to stay with sealed vessel. Pressure gauge is to be protected from damage during shipment. Pressure gauge is to include shut off valve.

10. Tolerances

10.1 The vendor shall choose the more stringent between Code requirement and the following. For nozzle elevations and positions, the tolerance shall be as measured from the bottom tangent line or datum, and not accumulated by multiple dimensioning possibly shown on the design drawings.

11. Inspection and testing

11.1 Abener Teyma (or an inspector on their behalf) reserves the right to inspect the equipment at any time during the course of fabrication. Abener Teyma retains the right to provide personnel to observe all fabrication work within the scope of the contracted work (including testing and inspection). Such individuals shall be afforded full and free access for these purposes, subject to safety and schedule constraints.

11.2 Inspector means Abener Teyma (or an inspector on their behalf).

11.3 Inspector shall have free access, at all reasonable times, to the areas where the work on equipment is being performed. Vendor shall notify Abener Teyma purchasing department in advance (minimum one week) of scheduled vessel testing to allow time for the Inspector to arrange to be at the test site before testing begins.

11.4 Mill and shop inspection shall not release the Vendor from responsibility for replacing any defective material and for repairing any defective workmanship that may be discovered in the field

Information and know-how hereon are confidential and proprietary property of Abener Teyma Mojave General Partnership and may not be used, reproduced, or revealed to others except in accordance with the terms of a contract with or other written permission of Abener Teyma Mojave General Partnership.

11.5 Vendor's currently qualified welders and procedures under ASME Sec. IX, must be submitted to Inspector for approval. Additional qualifications necessary are to be at vendor's expense.

11.6 All vessels shall be inspected and tested according to the applicable code as listed in the vessel data sheets.

11.7 For any required radiographic examination, a certified copy of a written report confirming that the work was inspected as set forth herein shall be provided when specified. Refer to 6007-ESP-ATP-58-62-V200V Contractor Data Requirements. The report shall include the following:

11.7.1 A summary of inspection of radiographs.

11.7.2 Identification of unacceptable radiographs and a statement of the action taken to rectify unsatisfactory welds

11.8 Tell-tale holes shall be used to pneumatically test all welded attachments prior to hydrostatic testing. Tell-tale holes shall not be plugged during hydrostatic testing of the vessel.

11.9 Vendor shall submit letters of completion to Abener Teyma at least twenty days prior to the requested final inspection date. The equipment must be ready for inspection and the tests run prior to this final inspection request.

11.10 The cost of all tests due to code requirements or manufacturer's test requirements shall be fully borne by vendor.

11.11 A written certification of an acceptable hydrostatic test shall be completed by vendor. The certification shall be forwarded to the individual indicated on the Abener Teyma purchase order.

12. Paint

12.1 Vendor shall **sand blast clean all the surfaces and** prime coat (finish) the vessel skirt as follows:

12.1.1 The vessel skirt shall be shop prime coated, exterior and interior, in accordance with specification 6007-ESP-ATP-00-60-N102, Paint System for High Temp. Non-primed Steel.

12.1.2 All shop priming and painting shall be in accordance with specification 6007-ESP-ATP-00-60-N180 "Shop Applied Painting".

12.1.3 No paint shall be applied until after all tests and examinations have been completed.

12.1.4 Flange faces and other machined areas shall not be painted unless specifically designated.

2	06-Mar-2012	General revision	RGTD	MZA	APF	
1	11-Oct-2011	Addition 6007-ESP-ATP-58-62-V200D (pages: 3, 6, 15)	HED	MZA	TS	APF
0	9-Sept-2011	For Bid	JAO	HED/ MZA	TS	APF
No.	Date	Description	By	Chk'd	App'd	App'd

Information and know-how hereon are confidential and proprietary property of Abener Teyma Mojave General Partnership and may not be used, reproduced, or revealed to others except in accordance with the terms of a contract with or other written permission of Abener Teyma Mojave General Partnership.

12.1.5 **Davit arms and manways shall be shop painted (finish)**.

12.2 **Vendor shall sand blast and prime coat the exterior of the vessels to avoid corrosion in the field while insulation is installed.**

12.3 **After cleaning and sand blasting the interior of the tanks, Vendor shall apply a corrosion inhibitor (Chempro Ferroxichem or equivalent).**

13. Installation information

13.1 Vendor shall separately quote one set of any special tools and wrenches required for installation and maintenance.

13.2 Supply all spare parts necessary for system assembly, testing, start-up, and commissioning. Vendor shall provide Abener Teyma a list of suggested spare parts within 1 month after project award. Vendor shall supply one spare set of gaskets for each manyway; tagged with the item number and purchase order number.

14. Shipping

All parts shall be skidded, boxed, or otherwise suitably prepared for shipment to protect against damage while in transit per specification 6007-ESP-ATP-00-60-G121.

15. Additional requirements

15.1 A permanent stainless steel nameplate with standoff shall be fixed to the equipment that includes the information as indicated in ASME Code for the marking of nameplates. Dimensions are to be indicated in feet and inches. Volumes are to be indicated in gallons.

15.2 In addition to the ASME requirements a permanent stainless steel nameplate with standoff shall be fixed to all pressure vessels including, but is not limited to, the following information:

15.2.1 Customers Equipment Number

15.2.2 Customers Equipment Name

15.2.3 Customers PO number

15.2.4 Nominal Diameter

2	06-Mar-2012	General revision	RGTD	MZA	APF	
1	11-Oct-2011	Addition 6007-ESP-ATP-58-62-V200D (pages: 3, 6, 15)	HED	MZA	TS	APF
0	9-Sept-2011	For Bid	JAO	HED/ MZA	TS	APF
No.	Date	Description	By	Chk'd	App'd	App'd

Information and know-how hereon are confidential and proprietary property of Abener Teyma Mojave General Partnership and may not be used, reproduced, or revealed to others except in accordance with the terms of a contract with or other written permission of Abener Teyma Mojave General Partnership.

15.2.5 Nominal Overall Height

15.2.6 Empty Weight

15.2.7 Internal Capacity

15.2.8 Design Specific Gravity

15.2.9 Material of Construction

Information and know-how hereon are confidential and proprietary property of Abener Teyma Mojave General Partnership and may not be used, reproduced, or revealed to others except in accordance with the terms of a contract with or other written permission of Abener Teyma Mojave General Partnership.

15.3 Data

15.3.1 A Manufacturer's data report shall be furnished and shall contain the same information as required by form U-1 of ASME SEC VIII D1. Certified material test reports shall be furnished, and they shall represent the properties in the as fabricated condition. The data report shall be signed by the Vendor, by an Authorized Inspector as defined in Par. UG-91 of the ASME Code, or as otherwise required by the applicable code. Signed copies of data reports and other required documentation shall be submitted to Abener Teyma prior to shipment of each vessel.

15.3.2 Welding, PWHT, and weld repair procedures shall be submitted to Abener Teyma for review prior to the start of fabrication.

15.3.3 Upon completion of fabrication, the Vendor shall supply Abener Teyma with:

15.3.3.1 Copy of PWHT recording (if applicable)

15.3.3.2 Copy of hydrostatic test chart

15.3.3.3 Copy of NDE (RT, UT, MT, PT, WFMT, etc.) test records

16. Vendor proposal data

16.1 Vendor shall include with their proposal the data sheets found at the end of this specification, completed with all the information.

16.2 Vendor shall complete the Vendor Commitment column of 6007-ESP-ATP-58-62-V200V and submit with the proposal. Failure to submit these data sheets will result in an incomplete proposal that may not be considered.

17. Exceptions

17.1 Comments and exceptions to the specification shall be listed in a separate part of the proposal title "Exceptions to the Specification". All Exceptions shall be listed in this section and shall reference the appropriate specification section. No other exceptions will be allowed.

18. Schedule

2	06-Mar-2012	General revision	RGTD	MZA	APF	
1	11-Oct-2011	Addition 6007-ESP-ATP-58-62-V200D (pages: 3, 6, 15)	HED	MZA	TS	APF
0	9-Sept-2011	For Bid	JAO	HED/ MZA	TS	APF
No.	Date	Description	By	Chk'd	App'd	App'd

Information and know-how hereon are confidential and proprietary property of Abener Teyma Mojave General Partnership and may not be used, reproduced, or revealed to others except in accordance with the terms of a contract with or other written permission of Abener Teyma Mojave General Partnership.

18.1 After issue of purchase order, Vendor shall provide a detailed schedule indicating dates for engineering, procurement, fabrication, testing, cleaning, painting, and shipping.

Information and know-how hereon are confidential and proprietary property of Abener Teyma Mojave General Partnership and may not be used, reproduced, or revealed to others except in accordance with the terms of a contract with or other written permission of Abener Teyma Mojave General Partnership.

Specification For HTF Expansion Vessels	Job No.: 120010	Spec. No.: 6007-ESP-ATP-58-62-V200
	Item No.: See Spec	No. 8
	Project: Mojave	
	Ref.:	Issue: 2 Dated : 6-March-12

19. Attachements

6007-ESP-ATP-58-62-V200D	HTF Expansion Vessels Data Sheets
6007-ESP-ATP-58-62-V200V	Vendor Data Requirements Heat Transfer Fluid Expansion Vessel
6007-ESP-ATP -00-62-G100	Project Design Criteria
6007-ESP-ATP -00-60-G120	Equipment Modeling Vendor Data Requirements
6007-ESP-ATP -00-60-G121	Shipping Preparation
6007-ESP-ATP-00-60-G130	Required Allowable Nozzle Loads
6007-ESP-ATP -68-61-CS30	Class 300 Carbon Steel – Piping System - HTF Return
6007-ESP-ATP-00-60-N102	Paint System for High Temp Non-primed Steel.
6007-ESP-ATP-00-60-N180	Shop Applied Painting
6007-HDD-ATP-58-62-C103	**Data sheet for Therminol VP-1**

2	06-Mar-2012	General revision	RGTD	MZA	APF	
1	11-Oct-2011	Addition 6007-ESP-ATP-58-62-V200D (pages: 3, 6, 15)	HED	MZA	TS	APF
0	9-Sept-2011	For Bid	JAO	HED/ MZA	TS	APF
No.	Date	Description	By	Chk'd	App'd	App'd

Information and know-how hereon are confidential and proprietary property of Abener Teyma Mojave General Partnership and may not be used, reproduced, or revealed to others except in accordance with the terms of a contract with or other written permission of Abener Teyma Mojave General Partnership.

Specification For HTF Expansion Vessels	Job No.: 120010	Spec. No.: 6007-ESP-ATP-58-62-V200
	Item No.: See Spec	No. 8
	Project: Mojave	
	Ref.:	Issue: 2 Dated : 6-March-12

Data Sheets with Proposal **VENDOR:**

Vendor data required with proposal.		
	Vessel MV-205 A,B,C	**Vessel MV-205 E**
Total Weight (empty) (lbs)		
Shell thickness (course 1)		
Shell thickness (course 1)		
Shell thickness (course 1)		
Shell thickness (course 1)		
Shell thickness (course 1)		
Shell thickness (course 1)		
Shell thickness (course 1)		
Head thickness (top)		
Head thickness (bottom)		
Skirt thickness		
Exceptions to Specification? (Y / N)		

2	06-Mar-2012	General revision	RGTD	MZA	APF	
1	11-Oct-2011	Addition 6007-ESP-ATP-58-62-V200D (pages: 3, 6, 15)	HED	MZA	TS	APF
0	9-Sept-2011	For Bid	JAO	HED/ MZA	TS	APF
No.	Date	Description	By	Chk'd	App'd	App'd

Information and know-how hereon are confidential and proprietary property of Abener Teyma Mojave General Partnership and may not be used, reproduced, or revealed to others except in accordance with the terms of a contract with or other written permission of Abener Teyma Mojave General Partnership.

Specification For HTF Expansion Vessels	Job No.: 120010	Spec. No.: 6007-ESP-ATP-58-62-V200
	Item No.: See Spec	No. 8
	Project: Mojave	
	Ref.:	Issue: 2 Dated : 6-March-12

Please, fill in the last column using the following:
Included = When the item specified is included in your base price
Optional = When the item is quoted like an option
Not Provided = When is not included in your base price and is not either quoted as an option.
Use the "notes" blank to include all the clarifications you need

Scope of work

Item	Abener	Vendor Name
Tank (bottom, shell and roof).	Required (8 tanks)	
Tank supports (skirt)	Required	
Manways, including davit arms, bolts, gasket, blind flange, ladder rungs and handle inside.	Required	
Nozzles with a projection of 10 inches	Required	
Equipment mounting flanges	Required	
Internals	Required	
Electrical grounding lugs (SS)	Required	
Studs, nuts, bolts, clips, lifting lugs	Required	
Nondestructive testing. 100% X-ray in welds.	Required	
Hydrostatic and pneumatic testing	Required	
Name plates	Required	
Anchor bolts (design and material)	Required	
Piping from bottom nozzle to skirt perimeter with supports	Required	
Open access to the skirt and vents	Required	
4 Grounding lugs (SS)	Required	
Vacuum rings	Required	
Insulation rings and insulation pins	Required	
4 welded reinforcing pads on top	Required	
Reinforcing pads and clips for vertical piping	Required	
Pipe clips for fire protection piping	Required	
Vortex breaker	Required	
Foundation template	Required	
Internal spray shield for the flash vessel	Required	
Internal stand pipe for the flash vessels	Required	
Internal nozzle pipe for the flash vessels	Required	
Tank sealing with inert gas and desiccant	Required	
Tank interior surface: blast clean and corrosion inhibitor	Required	

2	06-Mar-2012	General revision	RGTD	MZA	APF	
1	11-Oct-2011	Addition 6007-ESP-ATP-58-62-V200D (pages: 3, 6, 15)	HED	MZA	TS	APF
0	9-Sept-2011	For Bid	JAO	HED/ MZA	TS	APF
No.	Date	Description	By	Chk'd	App'd	App'd

Information and know-how hereon are confidential and proprietary property of Abener Teyma Mojave General Partnership and may not be used, reproduced, or revealed to others except in accordance with the terms of a contract with or other written permission of Abener Teyma Mojave General Partnership.

Specification For HTF Expansion Vessels	Job No.: 120010	Spec. No.: 6007-ESP-ATP-58-62-V200
	Item No.: See Spec	No. 8
	Project: Mojave	
	Ref.:	Issue: 2 Dated : 6-March-12

Item	Abener	Vendor name
Tank exterior surface: blast cleand and prime coat	Required	
Skirt, davits and manways: Shop painted (finish)	Required	
Access and platform to shell manway	Required	
Insulation rings and pins	Required	
Spares	2 gaskets per manway required	
Thermowells	Required	
PE stampping / Stampping	Required	
Final documentation (2 electronic copies and 10 paper copies)		
Others		
Notes:		

No.	Date	Description	By	Chk'd	App'd	App'd
2	06-Mar-2012	General revision	RGTD	MZA	APF	
1	11-Oct-2011	Addition 6007-ESP-ATP-58-62-V200D (pages: 3, 6, 15)	HED	MZA	TS	APF
0	9-Sept-2011	For Bid	JAO	HED/ MZA	TS	APF

Information and know-how hereon are confidential and proprietary property of Abener Teyma Mojave General Partnership and may not be used, reproduced, or revealed to others except in accordance with the terms of a contract with or other written permission of Abener Teyma Mojave General Partnership.

CONSTRUCTION

CODE: ASME SEC VII, DIV 1		STAMP: ASME	
PRESS.(PSIG)	MAX.OP. 174	MIN.OP. FV	DESIGN: 200/FV
TEMP. (°F)	MAX.OP. 680	MIN.OP. 100	DESIGN: 750
WIND VELOCITY: SEE SPEC. MPH		CORR.ALLOW: 0.0625" (1/16")	
SEISMIC ZONE: SEE SPEC.			
PHYS. & CHEM. TESTS: SEE SPEC.		STRESS RELIEVE: SEE SPEC.	

MATERIAL	SPEC	MATERIAL	SPEC
SHELL	SA-516-70	INTERNALS	VORTEX BREAKER
HEADS	SA-516-70	DAVIT/HINGE	YES, SEE SPEC
		PLATFORMS	YES, FOR THE MANWAY (A)
SKIRT	SA-516-70	LADDER (CAGED)	YES, FOR THE MANWAY (A)
		CLIPS AND PADS (PIPE SUPPORT)	YES, SEE SPEC
NOZZLES	CODE, SEE PIPE SPEC.	PAINTER TROLLEY	N/R
PIPE	CODE, SEE PIPE SPEC.	LIFTING LUGS	YES, SEE SPEC
COUPLINGS	N/R	PAINT	SKIRT AND TANK PRIMED
GASKETS	SEE PIPE SPEC	INSULATION	BY OTHERS, SEE SPEC, 8"
BOLTS	CODE	INSUL SUPPORTS, PINS	YES, SEE SPEC
NUTS	CODE	GUARDRAIL	YES, FOR THE MANWAY (A)

CONNECTION SCHEDULE

MK.	NR	SIZE	RATING	FACING	LOCATION	SERVICE	PROJ
A	1	24"	CODE	RF	BOT SHELL	MANWAY	10"
B	1	3"	CS32	WELD END	TOP	HTF MAIN PUMP ORIFICE	10"
C	1	3"	CS30	WELD END	TOP	N2 ULLAGE	10"
D	1	8"	CS30	WELD END	BOTTOM	HTF INLET/OUTLET	>6"
E	1	8"	CODE	WELD CAP	TOP	SPARE	10"
F	1	24"	–	OPEN	SKIRT	MANWAY	6"
G	1	1"	CODE	WELD END	BOT SHELL	THERMOWELL	10"
H	6	6"	SCH 80	OPEN	SKIRT	VENTS	X"
N							
J							
K							
L							
M1							
M2							
P							
Q							
S							

ITEM NO: A-MV-205A,B,C; B-M

NUMBER REQUIRED: SIX (6) ((3

TOTAL VOLUME (T/T): 5881 CU

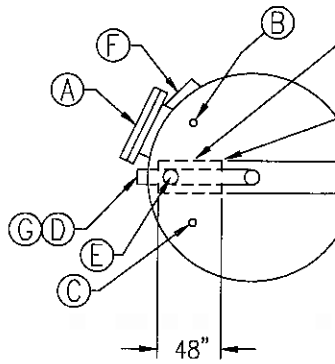

ORIENTATION

NOTES:

1. "SPECIFICATION" OR "SPEC" REFERS 6007-ESP-ATP-58-62-V200.
2. VENDOR TO PREPARE FACE OF WEL B31.3 AND ASME B16.25.
3. "PIPE SPEC" REFERS TO ABENER TE 6007-ESP-ATP-68-61-CS30 AND
4. 0% OPERATING LEVEL AT LOWER TA
5. NOT USED.
6. NET WORKING VOLUME IS BASED ON TANGENT BASIS).
7. ALL VESSELS ARE INTERCONNECTED HEADER. THERE WILL BE A COMMON
8. VESSELS SHALL BE INSULATED.
9. VESSELS ARE NOT INTERNALLY COA AND TO USE OF CORROSION INHIBIT
10. AT LEAST SIX (6) VENTS SHALL BE 80, EQUALLY-SPACED AT A MAXIMU CIRCUMFERENCE.
11. VORTEX BREAKER REQUIRED.

CONFI

REVISIONS					
NO.	DATE	DESCRIPTION	BY	BY	BY
1	3-28-12	REV NOZZLES/SPECS, ADDED DETAIL A			
0	091311	ISSUED FOR BID	TLF	HED	MZ

CONSTRUCTION

CODE: ASME SEC VII, DIV 1		STAMP: ASME	
PRESS.(PSIG)	MAX.OP. 174	MIN.OP. FV	DESIGN: 200/FV
TEMP. (°F)	MAX.OP. 680	MIN.OP. 100	DESIGN: 750
WIND VELOCITY: SEE SPEC. MPH		CORR.ALLOW: 0.0625" (1/16")	
SEISMIC ZONE: SEE SPEC.			
PHYS. & CHEM. TESTS: SEE SPEC.		STRESS RELIEVE: SEE SPEC.	

MATERIAL	SPEC	MATERIAL	SPEC
SHELL	SA-516-70	STAND PIPE	SA-516-70
		SPRAY SHIELD	SA-516-70
HEADS	SA-516-70	DAVIT/HINGE	YES, SEE SPEC
		PLATFORMS	YES, FOR THE MANWAY (J)
SKIRT	SA-516-70	LADDER (CAGED)	YES, FOR THE MANWAY (J)
		CLIPS AND PADS (PIPE SUPPORT)	YES, SEE SPEC
NOZZLES	CODE, SEE PIPE SPEC.	PAINTER TROLLEY	N/R
PIPE	CODE, SEE PIPE SPEC.	LIFTING LUGS	YES, SEE SPEC
COUPLINGS	N/R	PAINT	SKIRT AND TANK PRIMED
GASKETS	SEE PIPE SPEC	INSULATION	BY OTHERS, SEE SPEC, 8"
BOLTS	CODE	INSUL SUPPORTS PINS	YES, SEE SPEC
NUTS	CODE	GUARDRAIL	YES, FOR THE MANWAY (J)
		SPRAY NOZZLE	YES, SEE SPEC

CONNECTION SCHEDULE

MK.	NR	SIZE	RATING	FACING	LOCATION	SERVICE	PROJ
A	1	18"	CODE	RF	TOP	BLIND FLANGE	10"
B	1	3"	CS32	WELD END	TOP	HTF MAIN PUMP ORIFICE	10"
C	1	3"	CS30	WELD END	TOP	N2 ULLAGE	10"
D	1	36"	CS32	WELD END	BOTTOM	HTF INLET	>6"
E	1	8"	CODE	WELD CAP	TOP	SPARE	10"
F	1	30"	CS30	WELD END	SHELL	HTF OUTLET	10"
G	1	10"	CS32	WELD END	MANWAY COVER	HTF COOLING SPRAY	10"
H	1	24"	–	FLG	SKIRT	MANWAY	10"
I	1	1"	CODE	WELD END	BOT SHELL	THERMOWELL	10"
J	1	24"	–	RF	BOT SHELL	MANWAY	10"
K	6	6"	SCH 80	OPEN	SKIRT	VENTS	X"
L							
M1							
M2							
P							
Q							
S							

ITEM NO: A-MV-205E, B-MV-205E
NUMBER REQUIRED: TWO (2) ((1) FOR
TOTAL VOLUME (T/T): 6390 CUBIC FEE

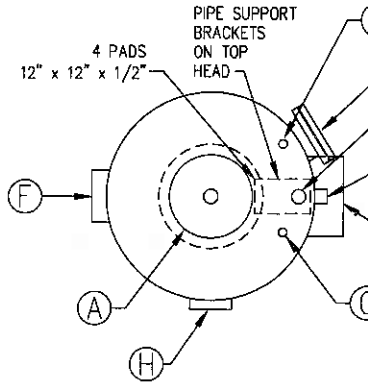

ORIENTATION

BO
(SE

CON

REVISIONS

NO.	DATE	DESCRIPTION	BY	BY	BY
1	10-15-12	REV NOZZLES/SPECS, ADDED DETAIL A			
0	091311	ISSUED FOR BID	TLF	HED	MZ

ABENER TEYMA MOJAVE

LETTER OF TRANSMITTAL

Date: May 27, 2014
Subject: Mojave Solar Project (09-AFC-5C)
Condition Number: AQ-12
Description: **Specifications for the ullage/expansion vent system.**
Submittal No.: AQ-12-01-00
To: Mr. Dale Rundquist, CPM
California Energy Commission

WE ARE SENDING YOU

Document Name	Title	REV
AQ-12 Cover Letter		
AQ-12 Technical Memorandum HTF Expansion System Basis	HTF Expansion System Basis	0
6007-ESP-ATP-44-62-F206	Specification For Carbon Filters	2
6007-ESP-ATP-44-62-V208	Specification For HTF Scrubbers	1
6007-ESP-ATP-58-62-V200	Specification For HTF Expansion Vessels	2
6007-ESP-ATP-58-62-V200D	Data Sheet (2 of 2) HTF Expansion Vessels mv-205A, B, C.	1

THESE ARE TRANSMITTED as checked below:

☒ For Review

REMARKS

COPY TO: File

SIGNED BY:

Vernon D. Leeming
Permitting Engineer
ABEINSA EPC

ABENER TEYMA MOJAVE

Cover Letter

Date:	May 27, 2014
Subject:	Mojave Solar Project (09-AFC-5C)
Condition Number:	AQ-12
Description:	**Specifications for the ullage/expansion vent system.**
Submittal No.:	AQ-12 -01-00

Mr. Dale Rundquist, CPM
California Energy Commission
1516 Ninth Street (MS-2000)
Sacramento, CA 95814
DRundquist@energy.state.ca.us

Dear Mr. Rundquist,

In compliance with AQ-12 we are submitting the Specifications for the ullage/expansion vent system of the Mojave Solar Project for your review.

For your convenience, we are including the Compliance language below:

AQ-12 The ullage/expansion system nitrogen venting shall be carried out only through ~~vents which have vapor condensing coolers which shall be maintained at or below 120 degrees Fahrenheit.~~ **District permit numbers C012015 and C012016.**

Verification: The project owner shall provide the District and CPM manufacturer design specifications showing compliance with this condition at least 30 days prior to the installation of the ullage/expansion vent system. ~~The project owner shall have active temperature gauges that can be inspected to show compliance with this condition.~~

Should you have any questions or comments, please don't hesitate to contact me.

COPY TO: File

SIGNED BY:

Vernon D. Leeming
Permitting Engineer
ABEINSA EPC

ABENER TEYMA MOJAVE

Technical Memorandum

Date:	May 27, 2014
Subject:	Mojave Solar Project (09-AFC-5C)
Condition Number:	AQ-12
Description:	**HTF Expansion System Basis – (Ullage System and Emissions Description - Final - Revised 04-05-13)**
Submittal No.:	AQ-12 -01-00

HTF Expansion System Basis

The heat transfer fluid (HTF) will be Therminol VP-1, produced by Solutia, Inc., which is comprised of diphenyl oxide (73 - 73.5%) and biphenyl (26.5 - 27%). This material in gaseous form represents VOCs. As the HTF is normally cycled from 422 ˚F to 740 ˚F every day, there will be some degradation of the HTF. This degradation will result in primarily benzene and phenol with smaller concentrations of toluene and naphthalene. These degradation products will affect the thermal efficiency of the HTF and increase vapor pressure. Benzene is classified as a hazardous air pollutant (HAP) and the plant's ullage system design basis is to limit the amount of benzene released to the atmosphere, as well as limit the overall VOC emissions. Both benzene and VOC emissions are expected to be below the allowable threshold as currently permitted.

Based on Solutia's simulations and lab/field tests, daily degraded low boilers are calculated to be approximately 128.6 lbs/day per plant (257.1 lbs/day for both plants).

The Mojave project has two identical Alpha and Beta plants. The numbers on the following flow diagram are representative of a single plant and the total project site is expected to have twice the numbers listed on the diagram. The HTF system of each plant will consist of 4 vertical ASME-rated expansion vessels, one horizontal ASME rated condensate receiver vessel, one ullage condenser, two ullage scrubbing units, two sets of activated carbon filters, and two vertical HTF overflow tanks.

These expansion vessels and the condensate receiver vessels will be sized such that during normal operation, the expansion of the HTF will: first, allow the nitrogen / vapor space pressure to increase from 8 bara to 12 bara nominally; and second, vent the volume of vapor space equivalent to the remaining expansion of the HTF to operating temperature, through the ullage system. However, after filling all pipes initially at ambient temperature (with high density – lower specific volume), the expansion of the HTF from the ambient temperature to the daily operating temperatures will push the HTF that is not needed in the system during daily operation into two overflow tanks that will be kept cooler (at about 150 ˚F) and blanketed with 2-15 inches Water Column (in. WC) of nitrogen.

During daytime operation, when the HTF is heated and expands, the expanded volume will move into the expansion vessels and the nitrogen will be compressed until the pressure reaches 12 bara, upon which any additional volume expansion will push the equivalent volume of vapor space through the ullage system. This additional volume being vented will be condensed in a nitrogen ullage condenser, stored in the pressurized, horizontal condensate receiver vessel, and pumped back into the system. At night, when the HTF cools and contracts, the HTF will move back into the system piping and allow the vapor

space pressure to lower to 8 bara before nitrogen is added to the expansion vessels to maintain this overnight pressure.

After some time of operation, the HTF will begin to break down into Low Boilers (LB's) such as Benzene, Toluene, Phenol, etc.; and High Boilers (HB's) – heavier sludge. After several years of operation, these HB's and LB's may accumulate to high enough concentrations that they may need to be removed from the system.

Although venting is reduced by letting the nitrogen space pressure rise and fall, the LB's and HTF (Therminol) which will be released into the vapor space at operating temperature will be removed from the nitrogen space by cooling and condensing them in the nitrogen ullage condenser to 120 ˚F. The concentration of LB's and HTF in the vent stream will be further reduced by sending the stream through a scrubber against a cooled liquid HTF flow, at 117 ˚F. Any residual LB's and HTF remaining in the vapor stream exiting the scrubber will be sent to a carbon filter system for further reduction before venting to the atmosphere.

Types of Venting

There are two types of venting from the HTF system:

- the venting of nitrogen due to HTF overflow tank breathing
- the daily venting of vapor space due to HTF expansion into the expansion vessels.

Overflow Tank Venting: As indicated above, during most normal operation, there will be no exchange of HTF or nitrogen between the expansion vessels and the overflow tanks. However, during the winter months when the HTF temperature drops below the normal daily range, some of the HTF in the overflow tanks may need to be transferred into the expansion vessels to maintain the minimum expansion tank's level. During these conditions, the overflow tank levels may fall and rise, thus requiring nitrogen space venting.

The worst case would be if the HTF system became very cold (limited to 120 ˚F) after a few days of no sun, in which case all the HTF from the overflow tanks would be pumped back into the system. The next time the system is brought back to normal operation, all of the HTF that was pumped out of the overflow tanks would return to the overflow tanks. Under that condition, the total amount of nitrogen vented is calculated to be 24,731 cu ft total for both plants.

The overflow tanks have vent scrubbers on their stacks before feeding into the carbon filters. Nitrogen and HTF mixture to be released passes through these scrubbers where it is cooled to 117 ˚F by the cooled liquid HTF stream flowing countercurrent. This overflow tank vent scrubber will condense most of the HTF vapor vented from the overflow tanks before reaching the carbon filters. The overflow tanks have a design temperature of 350 ˚F, but the worst case vapor space temperature has been calculated to be around 250 ˚F. The overflow tanks are designed to be maintained at 150 ˚F to minimize HTF venting but at the same time be sufficiently higher than the heat tracing (electric heating) initiation temperature of 120 ˚F. The HTF overflow tank has a liquid HTF cooler to maintain this tank's temperature at 150 ˚F.

Expansion Vessel Venting: As the HTF expands and contracts daily into and out of the expansion vessels, the LB's along with some vaporous HTF will be released into the vapor space. To help this separation of LB's into the vapor space, a side stream of HTF will also be sprayed to the top of the expansion vessels continuously. As the expansion vessels fill up with HTF, the nitrogen space is compressed until the pressure reaches 12 bara, upon which the vent valve opens and allows any further expansion to force the vapor space through the ullage system. The nitrogen + vapors will be pushed through the nitrogen ullage condenser, where most of the HTF and low boiler degradation products will be condensed and collected in the low boiler condensate receiver vessel. The nitrogen and other non-condensable constituents will pass through the expansion vessel vent scrubber where the 117 ˚F, countercurrent liquid HTF flow will bring even more HTF and low boilers into the liquid phase. The nitrogen, degradation products, and vaporous HTF remaining in the vapor phase at the exit of the scrubber will enter the carbon filters for further cleaning before venting to the atmosphere.

Low Boilers Removal Scheme: The HTF system is sized to minimize the nitrogen venting due to HTF expansion. On a daily basis, the low boilers and some HTF will be vented from the expansion vessels. Since the vessels are first allowed to pressurize from 8 bara to 12 bara, the amount of nitrogen being vented is reduced and is equivalent to the volume of four expansion vessels from the 27% level to the 72% level (normal operating level), or 45% of the total volume of the four expansion vessels. This vented nitrogen at 12 bar (174 psia) will include small amounts of HTF and HTF degraded by-products, the LB's.

An ASPEN simulation predicted that it is better to condense the low boilers under pressure than to expand the mixture and cool it. The expansion vessel's vent stream is cooled to 120 ˚F at 174 psia through a water-cooled nitrogen ullage condenser. The non-condensable vapors and nitrogen remaining in the vent stream will be passed through the rest of the ullage system for further cleaning before venting to the atmosphere. The condensed HTF along with low boilers will be sent to the low boiler condensate receiver vessel for temporary storage. The condensate stored in the receiver vessel will be pumped back into the main system.

Release Control Efficiency: Expected VOC emissions, per plant, from nitrogen venting are thus 0.47 lb/day HTF with a maximum of 27% or 0.13 lb/day comprised of biphenyl; 1.68 lbs/day of benzene, toluene, and phenol; and 0.02 lb/day high boilers, primarily dibenzofuran. Of this 1.68 lbs/day low boiler venting, 1.39 lbs/day of this is Benzene, which is within the present permit level of 1.9 lbs/day for this HAP venting. The Title V threshold for hazardous air pollutants is 10 tons/year for any individual HAP. So the HTF and benzene release, as calculated, is much less than the maximum allowable level.

Based on the calculations submitted, this control reduces the potential mass of HTF released, per plant, from 4921 lbs/day to 0.47 lbs/day resulting in an overall VOC control efficiency of about 99.99%. These results are outlined on the attached Process Flow Block Diagram.

Based on the above design considerations and system control efficiency, the project is not anticipating the need for any additional add-on VOC controls.

Emissions Summary

Therefore, the HTF overflow and expansion venting system will result in VOC (HTF plus low boiler and high boiler compounds) emissions on the order of 9.45 lbs/hr, 4.33 lbs/day (based on 40 minutes/day of expansion vessel venting and 20 minutes/day of overflow tank venting), 1,581 lbs/year, or 0.791 tpy for the entire facility. VOC emissions for a single power block would be approximately 4.73 lbs/hr, 2.17 lbs/day (based on 40 minutes/day of expansion vessel venting and 20 minutes/day of overflow tank venting), 791 lbs/yr, or 0.395 tpy. The VOC emissions is broken down by component in the table shown on the next page and the values for the HTF overflow and expansion venting emissions represents the emissions for a single power block. The most stringent permitted value is for the Benzene emissions, which is permitted at an HAP emission level of 1.9 lbs/day. With 95% efficient carbon filters, the Benzene emissions will be 3.06 lbs/hr, 1.39 lbs/day, 506.79 lbs/yr, or 0.253 tpy per power block.

HTF VOC fugitive emissions from valves, flanges, pumps, seals, etc., will be 1.34 lbs/hr, 21.33 lbs/day, 7,784 lbs/year, or 3.89 tpy, based on the data and assumptions in the VOC Component Count and Emissions spreadsheet attached at the end of this report.

The following table includes a breakdown of emissions on a component basis for both the HTF overflow and expansion venting emissions and HTF fugitive emissions and the values listed in the table represent values for a single power block:

Compound	HTF Overflow and Expansion Venting Emissions					HTF Fugitive Emissions			
-	lbs/hr Maximum	lbs/day Normal Annual Average	lbs/day Maximum	lbs/yr	tons/yr	lbs/hr	lbs/day	lbs/yr	tons/yr
Diphenyl ether	0.73	0.34	0.69	125.09	0.063	0.87	13.87	5,062	2.53
Biphenyl	0.27	0.13	0.25	46.27	0.023	0.31	5.00	1,824	0.91
Benzene (HAP)	3.06	**1.39**	2.78	506.79	0.253	0.03	0.43	156.69	**0.08**
Toluene	0.11	0.05	0.10	18.74	0.009	0.00	0.05	19.18	0.01
Phenol	0.52	0.24	0.48	87.34	0.044	0.03	0.52	188.76	0.09
"Dibenzo" (High Boilers)	0.04	0.02	0.03	6.33	0.003	0.09	1.46	533.77	0.27
VOC	4.73	**2.17**	4.33	790.56	0.395	1.34	21.33	7,784	3.89

Waste hauling (total load-out emissions for the 250 MW facility), when needed (initially it is not expected to be needed for several years) will be approximately 0.0013 lbs/hr, 0.0013 lbs/day, 0.0157 lbs/yr, or 7.84E-6 tpy. These emissions are based on the following data and assumptions:

a) 12 facility load-outs per year (1 per month) maximum.

b) 2 hours per load-out (1 hour at each power block). The actual load-out pumping or transfer time will be less than an hour, but an hour was used as the basic emission period.

c) VOC emissions loss rate is ~0.0013 lbs/hr (based upon the haul truck evacuated vapor space volume and VOC concentration in the vapor per facility load-out).

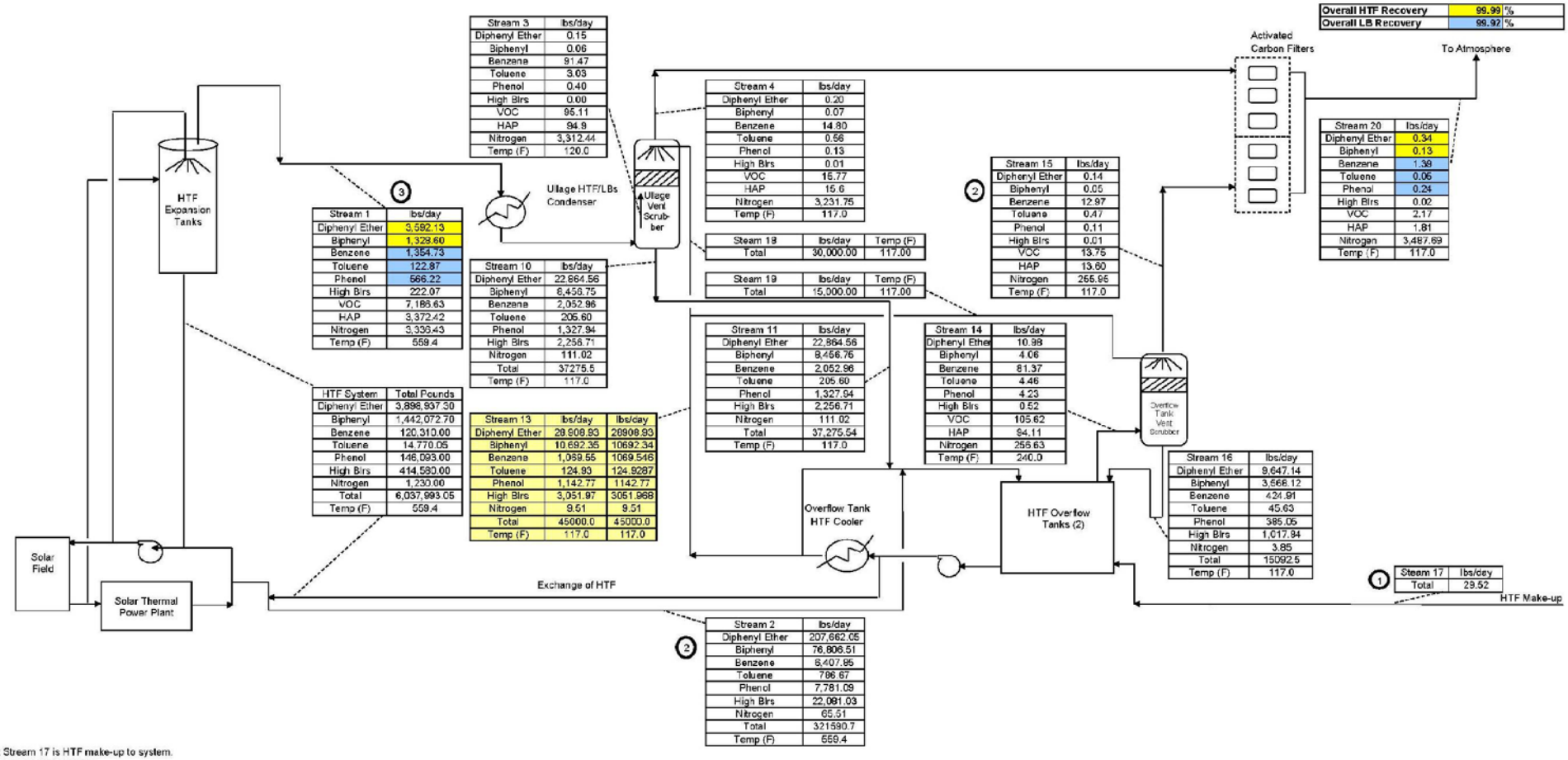

Overall HTF Recovery	99.99	%
Overall LB Recovery	99.92	%

Stream 3	lbs/day
Diphenyl Ether	0.15
Biphenyl	0.06
Benzene	91.47
Toluene	3.03
Phenol	0.40
High Blrs	0.00
VOC	95.11
HAP	94.9
Nitrogen	3,312.44
Temp (F)	120.0

Stream 4	lbs/day
Diphenyl Ether	0.20
Biphenyl	0.07
Benzene	14.80
Toluene	0.56
Phenol	0.13
High Blrs	0.01
VOC	15.77
HAP	15.6
Nitrogen	3,231.75
Temp (F)	117.0

Stream 20	lbs/day
Diphenyl Ether	0.34
Biphenyl	0.13
Benzene	1.38
Toluene	0.06
Phenol	0.24
High Blrs	0.02
VOC	2.17
HAP	1.81
Nitrogen	3,487.69
Temp (F)	117.0

Stream 15	lbs/day
Diphenyl Ether	0.14
Biphenyl	0.05
Benzene	12.97
Toluene	0.47
Phenol	0.11
High Blrs	0.01
VOC	13.75
HAP	13.60
Nitrogen	255.96
Temp (F)	117.0

Stream 1	lbs/day
Diphenyl Ether	3,592.13
Biphenyl	1,328.60
Benzene	1,354.73
Toluene	122.87
Phenol	586.22
High Blrs	222.07
VOC	7,186.63
HAP	3,372.42
Nitrogen	3,339.43
Temp (F)	559.4

Stream 18	lbs/day	Temp (F)
Total	30,000.00	117.00

Stream 19	lbs/day	Temp (F)
Total	15,000.00	117.00

Stream 10	lbs/day
Diphenyl Ether	22,864.56
Biphenyl	8,456.75
Benzene	2,052.96
Toluene	205.60
Phenol	1,327.94
High Blrs	2,256.71
Nitrogen	111.02
Total	37275.5
Temp (F)	117.0

Stream 11	lbs/day
Diphenyl Ether	22,864.56
Biphenyl	8,456.75
Benzene	2,052.96
Toluene	205.60
Phenol	1,327.94
High Blrs	2,256.71
Nitrogen	111.02
Total	37,275.54
Temp (F)	117.0

Stream 14	lbs/day
Diphenyl Ether	10.98
Biphenyl	4.06
Benzene	81.37
Toluene	4.46
Phenol	4.23
High Blrs	0.52
VOC	105.62
HAP	94.11
Nitrogen	255.63
Temp (F)	240.0

HTF System	Total Pounds
Diphenyl Ether	3,898,937.30
Biphenyl	1,442,072.70
Benzene	120,310.00
Toluene	14,770.05
Phenol	146,093.00
High Blrs	414,580.00
Nitrogen	1,230.00
Total	6,037,993.05
Temp (F)	559.4

Stream 13	lbs/day	lbs/day
Diphenyl Ether	20908.93	20908.93
Biphenyl	10692.35	10692.34
Benzene	1069.55	1069.546
Toluene	124.93	124.9287
Phenol	1142.77	1142.77
High Blrs	3051.97	3051.968
Nitrogen	9.51	9.51
Total	45000.0	45000.0
Temp (F)	117.0	117.0

Stream 16	lbs/day
Diphenyl Ether	9,647.14
Biphenyl	3,566.12
Benzene	424.91
Toluene	45.63
Phenol	385.05
High Blrs	1,017.84
Nitrogen	3.85
Total	15092.5
Temp (F)	117.0

Stream 17	lbs/day
Total	29.52

Stream 2	lbs/day
Diphenyl Ether	207,662.05
Biphenyl	76,806.51
Benzene	6,407.85
Toluene	786.67
Phenol	7,781.09
High Blrs	22,091.03
Nitrogen	65.51
Total	321590.7
Temp (F)	559.4

Note 1: Stream 17 is HTF make-up to system.
Note 2: Occurs in 20 minutes.
Note 3: Occurs in 40 minutes.
Note 4: VOCs are comprised of Diphenyl Ether, Biphenyl, Benzene, Toluene, Phenol, and High Boilers.
Note 5: HAPs are comprised of Biphenyl, Benzene, Toluene, and Phenol.

Permit DESIGN (PFD)
Vent to Activated Carbon (AC)

Process Flow Block Diagram - Vent Scrubbing System - Mojave
FINAL VALUES FOR MOJAVE
PERMIT CASE

Process Flow Block Diagram - Vent Scrubbing System - Mojave
FINAL VALUES FOR MOJAVE
PERMIT CASE

Process Flow Block Diagram - Vent Scrubbing System - Mojave
FINAL VALUES FOR MOJAVE
PERMIT CASE

Process Flow Block Diagram - Vent Scrubbing System - Mojave
FINAL VALUES FOR MOJAVE
PERMIT CASE

HTF System Component Count and Fugitve Emissions Estimate

Component	Count #	Service	EF lb/hr/src	Hrs/day	lbs/hr	lbs/day	lbs/yr	tons/yr
Valves								
Sealed Bellows/**Flex Hoses**	**4843**	Gas/Vapor & Lt. Liquid	0	24	0.000	0.000	0.000	0.000
	0	Gas Vapor	0	0	0.000	0.000	0.000	0.000
Non-Bellows Sealed	**356**	Lt. Liquid	0.000555	16	0.198	3.160	1153.417	0.577
		Hvy. Liquid	0.000019	8	0.007	0.054	19.743	0.010
Pumps								
Sealess Type	0	Lt. Liquid	0	0	0.000	0.000	0.000	0.000
Double Mech Seals or Equivalent	**20**	Lt. Liquid	0.00186	16	0.037	0.589	215.076	0.108
		Hvy. Liquid	0.000053	8	0.001	0.008	3.064	0.002
Single Mech Seal	0	Hvy. Liquid	0	0	0.000	0.000	0.000	0.000
Compressors	0	Gas/Vapor	0	0	0.000	0.000	0.000	0.000
Flanges/Connectors	**448**	Lt. Liquid	0.0000165	16	0.007	0.118	43.193	0.022
		Hvy. Liquid	0.0000165	8	0.007	0.059	21.597	0.011
PRVs	**11**	Gas	0.0985	16	1.084	17.336	6327.640	3.164
	19	Hvy. Liquid	0.000019	8	0.000	0.002	0.610	0.000
Process Drains	0	All	0	0	0.000	0.000	0.000	0.000
Open-ended Lines	0	Lt. Liquid	0.003307	0	0.000	0.000	0.000	0.000
				Totals	1.34	21.33	7784.34	3.89
Operating Days/Yr:	365							

Notes:
(1) The component counts listed above are the actual number of each component purchased as of 04/05/2013, with a 10% margin.
(2) The Emission Factor (EF) values listed above and guidance for light liquid vs. heavy liquid operating hours came from the following source: CEC, Supplemental Staff Assessment - Part B, Abengoa Mojave Solar, May 2010, 09-AFC-5, CEC-700-2010-003-SUPB.

ABENER TEYMA
MOJAVE

Specification For Carbon Filters	Job No.: 120010	Spec. No.: 6007-ESP-ATP-44-62-F206
	Item No.: See Spec	No. Req'd.: See spec
	Project: Mojave	
	Ref.:	Issue: 1 Dated : 11/28/12

Instructions:

1. Initialing (By/Chk'd/App'd) required on cover sheet only. All other title block information must be included on all pages.

2. Revisions are identified in the body of the Specification.

Rev. No.	Date	By	Chk'd	App'd	Description of Revision Including Page Numbers
0	29 Mar 2012	WMP	MZA	APF	Issued For Quotes
1	13 Nov 2012	JS	MZA	APF	Re-issued For Quotes
2	**28 Nov 2012**	**JS**	MZA	APF	**Issued for Purchase**

2	11/27/2012	Issue for Purchase	JS	MZA	APF	
1	11/13/2012	Re-issued for Bid	JS	MZA	APF	
0	3/29/12	Issued for Bid	WMP	MZA	APF	
No.	Date	Description	By	Chk'd	App'd	App'd

Information and know-how hereon are confidential and proprietary property of Abener Teyma Mojave General Partnership and may not be used, reproduced, or revealed to others except in accordance with the terms of a contract with or other written permission of Abener Teyma Mojave General Partnership.

Specification For Carbon Filters				
	Job No.: 120010		Spec. No.:	6007-ESP-ATP-44-62-F206
	Item No.: See Spec		No. Req'd.:	See spec
	Project: Mojave			
	Ref.:	Issue: 1	Dated :	11/28/12

1. Project Summary

1.1 The project consists of two, 140 MW, parabolic trough solar power plants, referred to as Alpha Plant and Beta Plant. The plants will be built on adjacent sites in an unincorporated area of San Bernardino County near Hinkley, California. The plant sites are located approximately six miles north of highway CA-58 on Harper Lake Road, approximately 20 miles west of Barstow.

1.2 The Vendor shall furnish carbon filters for each plant site meeting the requirements set forth in this specification. This specification covers the minimum requirements for the performance, design, materials, fabrication, testing and delivery of the filters.

2. General

2.1 The attachments identified in this document are considered to be part of this specification. Attached specifications shall be met and followed by the Vendor in full. All drawings and documents included in this package are considered "Contract Documents".

2.2 Definitions

a. "Vendor" shall mean **"Condorchem Envitech"** for which this specification is intended.
b. "Engineer", "Purchaser" or "Customer" shall mean the "Abener Teyma Mojave General Partnership".
c. "Owner" shall mean "Mojave Solar LLC".
d. "Construction Manager" or "Construction Superintendent" shall mean "Abener Teyma Mojave General Partnership".

2.3 The imperative language of this specification is directed to the Vendor, unless specifically noted otherwise. All directives such as "provide", "perform", "test", etc., are addressed solely to Vendor, whether or not the word "Vendor" is specifically mentioned. Work by Others will be specifically identified.

Information and know-how hereon are confidential and proprietary property of Abener Teyma Mojave General Partnership and may not be used, reproduced, or revealed to others except in accordance with the terms of a contract with or other written permission of Abener Teyma Mojave General Partnership.

Specification For Carbon Filters	Job No.: 120010	Spec. No.: 6007-ESP-ATP-44-62-F206
	Item No.: See Spec	No. Req'd.: See spec
	Project: Mojave	
	Ref.:	Issue: 1 Dated : 11/28/12

3. Function

The carbon filters will be used to minimize the emission of volatile organic compounds (VOCs) and hazardous air pollutants (HAPs) to the atmosphere. The VOC emissions will be Heat Transfer Fluid (HTF) vapors (di-phenyl ether and biphenyl) and its degradation products including, benzene, toluene, and phenol in nitrogen vented from the HTF Overflow Tanks and the HTF Expansion Vessels.

4. Operation

The HTF vapors and nitrogen will be displaced from the HTF Overflow Tanks and HTF Expansion Vessels due to thermal expansion of the HTF as it is warmed to operating temperatures each day. The HTF system will be vented as needed to control the maximum system pressure. The HTF Overflow Tank vent gases will pass through a HTF Scrubber prior to entering the filter. The HTF expansion vessel vent gases will pass through an ullage cooler, condensate receiver and a HTF Scrubber prior to entering the filter. The HTF Overflow Tanks will vent for approximately 20 minutes per day, when required. The HTF Expansion Vessel will vent approximately 40 minutes each day. The venting from the overflow tanks and the expansion vessels will be sequential and not simultaneous.

5. Location

5.1 The filters shall be installed outdoors. For proposal purposes, assume the filters will be on a concrete foundation at grade.

5.2 Electrical Area Classification - The filters will be installed in an area that is classified as a Class I Division 2 location per NEC 500.5 (Classification of Locations).

5.3 The equipment shall be designed to meet all design and climatic conditions set forth in this specification. Refer to specification 6007-ESP-ATP-00-60-G100 Project Design Criteria, for site specific information.

2	11/27/2012	Issue for Purchase	JS	MZA	APF	
1	11/13/2012	Re-issued for Bid	JS	MZA	APF	
0	3/29/12	Issued for Bid	WMP	MZA	APF	
No.	Date	Description	By	Chk'd	App'd	App'd

Information and know-how hereon are confidential and proprietary property of Abener Teyma Mojave General Partnership and may not be used, reproduced, or revealed to others except in accordance with the terms of a contract with or other written permission of Abener Teyma Mojave General Partnership.

6. Schedule

The vendor shall propose the best available delivery. Vendor's schedule shall comply with the Abener Teyma project schedule.

7. Scope

7.1 Vendor shall design, fabricate, assemble, inspect, test, pack and ship the carbon filters as specified herein.

7.2 Vendor shall furnish four sets of carbon filters; one set for the Alpha plant and one set for the Beta plant. The general arrangement will be two vessels installed in parallel, one for low pressure stream (Overflow Tanks) and one for high pressure stream (Expansion Vessels) per plant.

Equipment Name	Tag Number	Plant Site	Quantity
Carbon Filter	A-MF-206 A	Alpha	1
Carbon Filter	A-MF-206 B	Alpha	1
Carbon Filter	A-MF-206 C	Alpha	1
Carbon Filter	A-MF-206 D	Alpha	1
Carbon Filter	B-MF-206 A	Beta	1
Carbon Filter	B-MF-206 B	Beta	1
Carbon Filter	B-MF-206 C	Beta	1
Carbon Filter	B-MF-206 D	Beta	1

7.3 The vendor will provide the following:

a. Filter vessels
b. Vessel nozzles
c. Manways
d. Piping, **valves,** and distribution manifolds within the vessels
e. Supports for internal components
f. Vessel support legs and seismic restraints
g. Anchor bolt design
h. Grounding lugs

Information and know-how hereon are confidential and proprietary property of Abener Teyma Mojave General Partnership and may not be used, reproduced, or revealed to others except in accordance with the terms of a contract with or other written permission of Abener Teyma Mojave General Partnership.

i. Filter media, (1st fill)
j. Start up and commissioning spare parts (Quote as a separate line item.)
k. Spare parts for one year of operation (Quote as a separate line item.)
l. Other items as specified on the Equipment Data Sheets
m. Rupture Disk Alarm for PSV
n. Inlet ductwork for 2 vessels with 2 wafer valves
o. Outlet ductwork for 2 vessels with 2 wafer valves
p. Two test ports for each carbon filter sets (inlet and outlet)
q. Four vessel support legs
r. Lifting Lugs
s. Spiral Wound Gaskets
t. 4 load cells complete with high speed digital weight indicator and mounting accessories
u. Pressure/vacuum safety valve (Rupture disk and spare for startup)
v. Ladder and inspection platform
w. Pressure transmitters for inlet and outlet for each filter sets
x. Junction boxes
y. Flanges

7.4 Vendor Data

The Vendor shall furnish the Vendor Submittal Data for the Carbon Filters as specified here-in. Refer to specification 6007-ESP-ATP-44-62-F206V for additional Vendor Data Requirements.

7.5 Work By Others

The following is out of the scope of this specification:
a. Receiving, unloading, storage and handling of the filters on site
b. Installation of the filters
c. Foundations
d. Furnishing and installation of anchor bolts
e. Piping prior to the inlet flange of the filters and after the outlet flange of the filters
f. Interconnecting piping between the filter vessels

2	11/27/2012	Issue for Purchase	JS	MZA	APF	
1	11/13/2012	Re-issued for Bid	JS	MZA	APF	
0	3/29/12	Issued for Bid	WMP	MZA	APF	
No.	Date	Description	By	Chk'd	App'd	App'd

Information and know-how hereon are confidential and proprietary property of Abener Teyma Mojave General Partnership and may not be used, reproduced, or revealed to others except in accordance with the terms of a contract with or other written permission of Abener Teyma Mojave General Partnership.

g. Supply of any required utilities to the filters.

8. Performance

8.1 The vendor supplied equipment shall meet the performance requirements defined in this specification and under the column marked "Abener Teyma Requirement" on the Data Sheets; included herein.

8.2 The vendor shall provide with his quotation guaranteed final vent values for Benzene and Toluene at the design flow rate.

8.3 The vendor shall provide with his quotation the "expected" final vent values for all the gas constituents at the design flow rate.

8.4 Vendor shall have sole responsibility for meeting the performance requirements. Vendor shall provide all equipment, appurtenances, and accessories required in order to meet this performance.

8.5 The vendor shall determine the optimal filter design including; vessel arrangement, vessel dimensions, filter media, media depth, and gas distribution system to meet these requirements.

8.6 The filters (including any auxiliaries) shall be designed and constructed for a minimum service life of 30 years.

8.7 The vendor shall provide with his quotation the expected life of the filter media.

9. Codes and Standards

9.1 At a minimum all applicable portions of the codes and standards listed below shall be followed.

a. AISI – American Iron and Steel Institute
b. ANSI – American National Standards Institute
c. ASME – American Society of Mechanical Engineers
d. ASTM – American Society of Testing Materials

Information and know-how hereon are confidential and proprietary property of Abener Teyma Mojave General Partnership and may not be used, reproduced, or revealed to others except in accordance with the terms of a contract with or other written permission of Abener Teyma Mojave General Partnership.

e. AWS – American Welding Society
f. CAL/OSHA – California Occupational Safety and Health Administration
g. CBC – California Building Standards Code (2010)
h. EPA – Environmental Protection Agency
i. NEC – National Electric Code
j. NFPA – National Fire Protection Association
k. OSHA – Occupational Safety and Health Act
l. SSPC – The Society for Protective Coatings

9.2 Vendor shall meet all federal, state, and local laws and regulations.

9.3 Should there be any conflict between applicable codes, standards, specifications noted herein or vendor's recommendations and those of the locality of the project, the more stringent code shall apply.

10. Design

10.1 General

10.1.1 The vendor shall design the filters to meet the operating conditions and performance requirements set forth in this specification. Any conflicts between the specification, the data sheets and the appropriate codes and standards shall be referred to Abener Teyma for resolution.

10.2 Vessels

10.2.1 The carbon filters, being low pressure vessels, may be non-code vessels and do not require an ASME code stamp.

10.2.2 Vessels shall be designed to withstand internal or external pressure and mechanical loads induced by vessel dead load, process, contents, earthquake, wind and other specified loadings. Wind and earthquake loads shall be in accordance with the Project Design Criteria described in Specification 6007-ESP-ATP-00-60-G001. Load

Information and know-how hereon are confidential and proprietary property of Abener Teyma Mojave General Partnership and may not be used, reproduced, or revealed to others except in accordance with the terms of a contract with or other written permission of Abener Teyma Mojave General Partnership.

combinations must be appropriately considered. Structural / seismic design calculations are required.

10.2.3 All vessels shall have physical dimensions within the allowable limits for shipping, and shall be completely shop fabricated and tested prior to shipping.

10.2.4 Vendor shall furnish the vessels complete as shown on data sheets and as noted herein and shall include all necessary nozzles, blind flanges, studs, nuts, bolts, clips, support brackets, lifting lugs, davits, and gaskets.

10.2.5 The design shall be such to avoid any corrosion of vessel equipment.

10.2.6 The design shall be such to avoid any contamination of the vessel contents once the vessel is put into service.

10.2.7 The layout of weld seams shall be such that it will allow full access for inspection. Circumferential seams shall not be located within a distance of 1-1/2" of any external compression ring, internal ring, support ring, etc. Nozzles and manholes shall not intersect any weld seams, unless approved by Abener Teyma.

10.2.8 Pressure and Vacuum Relief

(1) The vendor shall furnish and install pressure and vacuum relief to protect the vessel from damage due to over pressurization or vacuum.

10.2.9 Nozzles

(1) Vendor to indicate on project drawings the maximum allowable loads on nozzles. Minimum design of nozzles shall be in accordance with specification 6007-ESP-ATP-00-60-G130, Required Allowable Nozzle Loads.

(2) Vendor shall extend nozzles 6 inches beyond the exterior surface of the vessel unless otherwise specified.

Information and know-how hereon are confidential and proprietary property of Abener Teyma Mojave General Partnership and may not be used, reproduced, or revealed to others except in accordance with the terms of a contract with or other written permission of Abener Teyma Mojave General Partnership.

(3) All nozzles shall be flush at the interior surface of the vessel wall, unless otherwise specified.

(4) Nozzle sizes and locations shall be coordinated with Abener engineering prior to fabrication. Abener will review locations and sizes on the submittal drawings.

(5) Vendor shall provide sample ports

10.2.10 Manways

(1) Two (2) manways shall be provided in each vessel for accessing and ventilating the filter interior.

(2) Manways shall be located to provide easy access for maintenance and cleaning of the filter.

(3) Manway covers shall be equipped with hinges or davits and handles to aid in removing and replacing the covers.

10.2.11 Lifting Lugs

(1) Vessels shall include lifting lugs and tailing lugs, designed by vendor, for use in loading, unloading, and field erection of vessel. Empty weight shall be marked on the vessel by using lettering no less than 6 inches high.

10.2.12 Anchor Bolts

(1) Anchor bolts shall be furnished by Abener Teyma as sized and selected by the Vendor. Vendor shall specify bolt material, size, and quantities and provide drawings and loading diagrams for structural design.

Information and know-how hereon are confidential and proprietary property of Abener Teyma Mojave General Partnership and may not be used, reproduced, or revealed to others except in accordance with the terms of a contract with or other written permission of Abener Teyma Mojave General Partnership.

10.2.13 Ground Lugs

(1) Each filter shall include two stainless steel grounding lugs. Grounding lugs shall be a minimum of 3" wide x 3 "tall x ½" thick plates, and shall be made of 304 grade stainless steel. The grounding lugs shall be drilled to match "Burndy Qiklug" type "QA28-2N" which utilizes NEMA bolt spacing. Grounding lugs shall be welded to the vessel support lugs. The lugs shall be oriented so that the holes in the lug are on the vertical centerline.

10.2.14 Vessel Internals

(1) The filter shall be designed to prevent channeling and provide a uniform gas velocity across the filter cross section.

(2) The gas velocity through the filter shall not cause the carbon media to be fluidized.

(3) The maximum pressure drop from the inlet to outlet of the filter set shall not exceed the value listed in the equipment data sheet.

(4) The vendor shall design the filters to allow for complete removal and re-filling of the filter media.

(5) The vendor shall state the maximum allowable gas flow and inlet pressure to the filters.

(6) The vendor shall provide the operator a means of determining the remaining media life.

10.3 Media

Information and know-how hereon are confidential and proprietary property of Abener Teyma Mojave General Partnership and may not be used, reproduced, or revealed to others except in accordance with the terms of a contract with or other written permission of Abener Teyma Mojave General Partnership.

10.3.1 The filter media should be coal based pellet and depth of media shall be by the vendor.

10.3.2 The Vendor shall provide the 1st fill of media for the filters.

10.3.3 The vendor shall provide instructions and on-site supervision of the first media fill and the first media replacement.

10.4 Materials of Construction

10.4.1 All materials shall be new and free from defects.

10.4.2 Materials of construction shall be per the attached data sheet. Where materials of construction are not specified, Vendor shall propose materials for each item as appropriate for the service conditions.

10.4.3 All materials purchased by Vendor shall meet nationally recognized standards unless otherwise approved by Abener Teyma.

10.4.4 All vessel materials shall be compatible with the vessel contents and in accordance with all applicable welding procedures.

10.4.5 Copies of mill test reports for materials shall be provided to Abener Teyma by Vendor.

10.4.6 Asbestos or material containing asbestos shall not be used in the construction or manufacture of the equipment.

10.5 Insulation and Heat Tracing

10.5.1 The filters vessels will not be insulated or heat traced.

10.6 Painting

10.6.1 Vessel exteriors shall be painted per manufactures standard.

Information and know-how hereon are confidential and proprietary property of Abener Teyma Mojave General Partnership and may not be used, reproduced, or revealed to others except in accordance with the terms of a contract with or other written permission of Abener Teyma Mojave General Partnership.

10.7 Nameplate

10.7.1 Permanent stainless steel nameplates shall be fixed to each vessel including, but is not limited to, the following information:

(1) Customers Equipment Number

(2) Customers Equipment Name

(3) Customers PO number

(4) Nominal Diameter

(5) Nominal Overall Length

(6) Empty Weight

(7) Internal Capacity

(8) Design Specific Gravity

(9) Material of Construction

10.7.2 The location of the tag shall be determined during drawing review.

11. Submittals

11.1 Vendor shall provide engineering drawings and calculations for approval prior to the start of fabrication.

11.2 Refer to and comply with specification 6007-ESP-ANC-44-62-F206V, Vendor Data Requirements – Carbon Filters.

11.3 Approval of Vendor's drawings and calculations is limited to verifying general compliance with specifications and design drawings, and does not imply verification of dimensions, quantities, or calculations. Vendor is not relieved from responsibility for accurate dimensioning, equipment sizing, fabrication to required tolerances, and fabrication fit-up.

Information and know-how hereon are confidential and proprietary property of Abener Teyma Mojave General Partnership and may not be used, reproduced, or revealed to others except in accordance with the terms of a contract with or other written permission of Abener Teyma Mojave General Partnership.

11.4 U. S. customary units shall be used on all drawings and calculations.

11.5 Drawings:

11.5.1 A general arrangement drawing shall be furnished for each vessel. The general arrangement drawing shall include:

(1) Overall dimensions of the vessel,
(2) Size and location and orientation of all nozzles and connections,
(3) Size and locations of manways,
(4) Anchor bolt layout,
(5) Required clearances for media replacement and other maintenance access,
(6) Vessel data:
  (i) Empty weight, shipping weight, operating weight, flooded weight
  (ii) Shell dimensions
  (iii) Shell thickness
  (iv) Head style and dimensions
  (v) Head thickness (nominal)
  (vi) Head volume
  (vii) Total volume
  (viii) Maximum and minimum allowable working pressures
  (ix) Materials of construction
(7) Location of the vessel nameplate and the actual data to be inscribed on the name plate.

11.5.2 Vendor shall provide all drawings that are issued for fabrication, sealed by a licensed Professional Engineer who is legally authorized to practice in the State of California.

11.6 Data and Calculations

11.6.1 Design calculations (including lifting attachments and support lugs) made by the Vendor shall be furnished prior to or along with submission of drawings for approval. When calculations are made using a computer, all input data, assumptions, computer program version used, and a summary of the results shall be furnished.

Information and know-how hereon are confidential and proprietary property of Abener Teyma Mojave General Partnership and may not be used, reproduced, or revealed to others except in accordance with the terms of a contract with or other written permission of Abener Teyma Mojave General Partnership.

11.6.2 Vendor shall provide their structural calculation package, sealed by a licensed Professional Engineer who is legally authorized to practice in the State of California.

12. Fabrication

12.1 Any fabrication sub-contracted to others shall require written approval by Abener Teyma.

12.2 All plate and other material used in the execution of this work shall be new and clean stock, free from surface laminations and other physical imperfections.

12.3 The axis of any nozzle on the vessel shell shall be radial and perpendicular to the longitudinal axis of the vessel unless otherwise specified. The axis of any nozzle on the vessel head shall be parallel to the longitudinal axis of the vessel unless otherwise specified. The flange face shall be perpendicular to the nozzle axis. All welds protruding beyond the flange face shall be ground flush.

12.4 Flange bolt holes of shell nozzles shall straddle the axial center line.

12.5 Vendor shall prepare weld end nozzles end face in accordance with ASME B31.3 and ASME B16.25. Abener Teyma shall review each weld end nozzle face prior to protection for shipment. Vendor is to protect each weld end nozzle face against damage during handling and transporting.

12.6 All permanent attachments, stiffeners, clip angles, ring angles, etc., shall be joined to vessels by continuous welding, unless approved otherwise by Abener Teyma.

12.7 Remove all sharp edges and burrs.

12.8 All welds and surfaces shall be free of gouges, pits, cracks or other surface defects.

12.9 All welds and materials discovered to be non-compliant through inspection and/or testing shall be fully repaired at vendor's cost.

Information and know-how hereon are confidential and proprietary property of Abener Teyma Mojave General Partnership and may not be used, reproduced, or revealed to others except in accordance with the terms of a contract with or other written permission of Abener Teyma Mojave General Partnership.

12.10 Fabricated location and orientation of nozzles will be reviewed by Abener Teyma. If there are any discrepancies with project documents, the vendor will make corrections.

12.11 To prevent contamination of the vessel contents, Vendor shall mechanically clean the interior surface of the vessel to remove all weld spatter, scale, rust, filings, dirt, etc., as well as all foreign materials. Vendor shall not commence mechanical cleaning until after all testing has been completed.

13. Inspection

13.1 Abener Teyma (or an inspector on their behalf) reserves the right to inspect the equipment at any time during the course of fabrication. Abener Teyma retains the right to provide personnel to observe all fabrication work within the scope of the contracted work (including testing and inspection). Such individuals shall be afforded full and free access for these purposes, subject to safety and schedule constraints.

13.2 Inspector means Abener Teyma (or an inspector on their behalf).

13.3 Inspector shall have free access, at all reasonable times, to the areas where the work on equipment is being performed. Vendor shall notify Abener Teyma purchasing department in advance (minimum one week) of scheduled vessel testing to allow time for the Inspector to arrange to be at the test site before testing begins.

13.4 Mill and shop inspection shall not release the vendor from responsibility for replacing any defective material and for repairing any defective workmanship that may be discovered in the field

13.5 Vendor shall submit letters of completion to Abener Teyma at least twenty days prior to the requested final inspection date. The equipment must be ready for inspection and the tests run prior to this final inspection request.

Information and know-how hereon are confidential and proprietary property of Abener Teyma Mojave General Partnership and may not be used, reproduced, or revealed to others except in accordance with the terms of a contract with or other written permission of Abener Teyma Mojave General Partnership.

13.6 The cost of all tests due to code requirements or manufacturer's test requirements shall be fully borne by vendor.

13.7 The carbon filter vessels shall be tested for leaks by filling with water.

13.8 A written certification of an acceptable water fill test shall be completed by vendor. The certification shall be forwarded to the individual indicated on the Abener Teyma purchase order.

14. Shipping

14.1 All parts shall be skidded, boxed, or otherwise suitably prepared for shipment to protect against damage while in transit.

14.2 Vendor shall refer to specification 6007-ESP-ATP-00-60-G121 for shipping and preparation requirements.

15. Installation Information

15.1 The Vendor shall specify with quote any detailed installation requirements.

15.2 The Vendor shall include in their quotation one set of any special tools and wrenches required for installation and maintenance.

16. Startup, Training and Field Services

The Vendor shall state all startup, training and field services included in bid, clearly identifying duration, number of people, and specific services provided. The Vendor shall quote any additional assistance on a per diem rate.

Information and know-how hereon are confidential and proprietary property of Abener Teyma Mojave General Partnership and may not be used, reproduced, or revealed to others except in accordance with the terms of a contract with or other written permission of Abener Teyma Mojave General Partnership.

Specification For Carbon Filters	Job No.: 120010	Spec. No.: 6007-ESP-ATP-44-62-F206
	Item No.: See Spec	No. Req'd.: See spec
	Project: Mojave	
	Ref.:	Issue: 1 Dated : 11/28/12

17. Qualifications

The Vendor shall furnish equipment, designs, and materials that have been proven by successful operation for no less than five (5) years. Requests to use untried or unproven equipment, designs, or materials must be approved by the Purchaser in writing prior to incorporation into the purchase order.

18. Warranty:

All components of the purchased system shall be covered under warranty by the Vendor. The Vendor shall troubleshoot and repair any malfunctioning system element at no cost to the Purchaser during the warranty period. Reference commercial documentation for the warranty period and terms conditions.

19. Guarantees:

19.1 Vendor shall guarantee the minimum removal efficiency of Benzene and Toluene through a temperature range from 80° F up to 140°F at the design flow rates.

19.2 Vendor shall guarantee the maximum pressure drops through the filter set during expansion vessel venting and overflow tank venting.

2	11/27/2012	Issue for Purchase	JS	MZA	APF	
1	11/13/2012	Re-issued for Bid	JS	MZA	APF	
0	3/29/12	Issued for Bid	WMP	MZA	APF	
No.	Date	Description	By	Chk'd	App'd	App'd

Information and know-how hereon are confidential and proprietary property of Abener Teyma Mojave General Partnership and may not be used, reproduced, or revealed to others except in accordance with the terms of a contract with or other written permission of Abener Teyma Mojave General Partnership.

20. Proposal Requirements

20.1 Vendor shall furnish a quote for the following equipment and services:

20.1.1 Design, materials, labor, fabrication, testing, inspection, and shipping of the equipment.

20.1.2 All parts and accessories required for complete functional Carbon Filters.

20.1.3 As a separate line item the vendor shall quote the cost of replacement carbon for a period of one year. Usage shall be based on venting of the expansion vessels and overflow tanks once per day as described in the data sheets below.

20.1.4 Submittal of data as required in the Vendor Data Requirements Specification, 6007-ESP-ATP-44-62-F206V.

20.1.5 Start-up, training and commissioning, clearly identifying duration, number of people, and specific services included in bid. The Vendor shall quote any additional assistance on a per diem rate.

20.1.6 Spare parts recommended for startup and commissioning, with quantities. Quote as a separate line item.

20.1.7 Recommended spare parts for two years of operation, with quantities. Quote as a separate line item.

20.1.8 The Vendor shall separately quote one set of any special tools and wrenches required for maintenance. Quote as a separate line item.

20.2 The Vendor's base quotation shall consist of the equipment and services identified herein. Pricing for Purchaser identified options shall be submitted as separate line items. Vendor identified alternatives may be submitted if system improvements and/or cost savings can be realized. Vendor may propose alternate arrangements based on their experience.

Information and know-how hereon are confidential and proprietary property of Abener Teyma Mojave General Partnership and may not be used, reproduced, or revealed to others except in accordance with the terms of a contract with or other written permission of Abener Teyma Mojave General Partnership.

20.3 Vendor shall state their equipment Warranty in the proposal.

20.4 Vendor shall state their Performance Guarantee in the proposal.

20.5 Comments and exceptions to the specification shall be listed in a separate part of the proposal titled "Exceptions to the Specification". All exceptions shall be listed in this section and shall reference the appropriate specification section. No other exceptions will be allowed. After the purchase order is awarded, the Vendor shall be responsible to satisfy all requirements of this specification except for the agreed upon exceptions. Any requirements that are not included with the Vendor's equipment and are in the equipment specification shall be furnished and installed at the Vendor's expense.

20.6 Vendor shall complete and return the Equipment Data Sheets with the proposal. Failure to submit these sheets will result in an incomplete proposal that may not be considered.

20.7 Vendor shall furnish dimensioned envelope drawings with the proposal. Drawing shall show the location of all connections, supports, estimated weights, and other pertinent data.

20.8 Vendor shall provide minimum clearances and access required for maintenance, service and operation of the filter and its components.

21. Attachments

6007-ESP-ATP-44-62-F206V	Vendor Data Requirements – Carbon Filters
6007-ESP-ATP-00-60-G100	Project Design Criteria
6007-ESP-ATP-00-60-G120	Equipment Modeling Vendor Data Requirements
6007-ESP-ATP-00-60-G121	Shipping and Preparation Requirements
6007-ESP-ATP-00-60-G130	Required Allowable Nozzle Loads

Information and know-how hereon are confidential and proprietary property of Abener Teyma Mojave General Partnership and may not be used, reproduced, or revealed to others except in accordance with the terms of a contract with or other written permission of Abener Teyma Mojave General Partnership.

Specification For Carbon Filters	Job No.: 120010	Spec. No.: 6007-ESP-ATP-44-62-F206
	Item No.: See Spec	No. Req'd.: See spec
	Project: Mojave	
	Ref.:	Issue: 1 Dated : 11/28/12

Carbon Filters, MF-206

Data Sheets	Vendor:	
CARBON FILTERS MF-206C	**ABENER / TEYMA REQUIREMENT**	**VENDOR INFORMATION**
TYPE: EXPANSION	Activated Carbon Bed	
DESIGN AND CONSTRUCTION		
Vessel Design Code:	None	ASME VIII DIV 1
Stamp:	Not Required	NOT REQUIRED
Operating Pressure: in H_2O	≤75 to 0	≤75 to 29
Operating Temperature: °F	80 to 120	120
Design Pressure: in H_2O	84	100
Design Temperature: °F	25 to 140	140
Corrosion Allowance, in	**By vendor**	0.02(STAINLESS STEEL)
Number of Filters per Plant Site	By Vendor - (See note 1)	2 in parallel (for expansion)
Filter Vessel Orientation	Horizontal	HORIZONTAL
Vessel Dimensions		
Inside Diameter, in.	By vendor	75
Shell Height, Seam to Seam, in.	By vendor	Length 108
Overall Height, In.	By vendor	128
Head style / Flange height, in.	By vendor/ By vendor	KORBOGGEN
Shell Thickness, in.	By vendor	0.12
Head thickness, in.	By vendor	0.16
Head Volume, Ft^3	By vendor	
Vessel Volume, Ft^3	By vendor	275 (TOTAL)
Vessel Support Legs, Qty.	By vendor	4
Nozzles / Manways	Size / Type / Class	
A - Inlet, in.	By vendor	8/150#
B - Outlet, in.	By vendor	8/150#
C - Media Fill, in	By vendor	20
D - Media Removal, in	By vendor	8
E - Pressure Relief, in	By vendor	3

2	11/27/2012	Issue for Purchase	JS	MZA	APF	
1	11/13/2012	Re-issued for Bid	JS	MZA	APF	
0	3/29/12	Issued for Bid	WMP	MZA	APF	
No.	Date	Description	By	Chk'd	App'd	App'd

Information and know-how hereon are confidential and proprietary property of Abener Teyma Mojave General Partnership and may not be used, reproduced, or revealed to others except in accordance with the terms of a contract with or other written permission of Abener Teyma Mojave General Partnership.

Specification For Carbon Filters	Job No.: 120010	Spec. No.: 6007-ESP-ATP-44-62-F206
	Item No.: See Spec	No. Req'd.: See spec
	Project: Mojave	
	Ref.:	Issue: 1 Dated : 11/28/12

Data Sheets	Vendor:	
CARBON FILTERS MF-206C	**ABENER / TEYMA REQUIREMENT**	**VENDOR INFORMATION**
F1 - Upper Manway, in	24"	20
F2 - Lower Manway, in	30"	NONE
Materials of Construction		
Shell	SA 182 /SS304	SA 182 or similar (AISI304)
Head	SA 182 /SS304	SA 182 or similar (AISI304)
Internal Supports	SA 182 /SS304	SA 182 or similar (AISI304)
Internal Piping	SA 182 /SS304	SA 182 or similar (AISI304)
Media		
Media	Activated Carbon	Activated Carbon
Media Vendor	**By vendor**	CONDORCHEM
Media Type / Designation	**Coal Pellet**	Pellet 4 mm
Depth, in	By vendor	71
Media life (mas flow rate/max concent .)	By vendor	242 days/62 days

2	11/27/2012	Issue for Purchase	JS	MZA	APF	
1	11/13/2012	Re-issued for Bid	JS	MZA	APF	
0	3/29/12	Issued for Bid	WMP	MZA	APF	
No.	Date	Description	By	Chk'd	App'd	App'd

Information and know-how hereon are confidential and proprietary property of Abener Teyma Mojave General Partnership and may not be used, reproduced, or revealed to others except in accordance with the terms of a contract with or other written permission of Abener Teyma Mojave General Partnership.

Specification For Carbon Filters	Job No.: 120010	Spec. No.: 6007-ESP-ATP-44-62-F206
	Item No.: See Spec	No. Req'd.: See spec
	Project: Mojave	
	Ref.:	Issue: 1 Dated : 11/28/12

Carbon Filters, MF-206

Data Sheets	Vendor:	
CARBON FILTERS MF-206C	**ABENER / TEYMA REQUIREMENT**	**VENDOR INFORMATION**
TYPE: OVERFLOW	Activated Carbon Bed	
DESIGN AND CONSTRUCTION		
Vessel Design Code:	None	ASME VIII DIV 1
Stamp:	Not Required	NOT REQUIRED
Operating Pressure: in H_2O	≤29 to 1	≤75 to 29
Operating Temperature: °F	80 to 120	120
Design Pressure: in H_2O	84	100
Design Temperature: °F	25 to 140	140
Corrosion Allowance, in	**By vendor**	0.02(STAINLESS STEEL)
Number of Filters per Plant Site	By Vendor - (See note 1)	2 in parallel (for expansion)
Filter Vessel Orientation	Horizontal	HORIZONTAL
Vessel Dimensions		
Inside Diameter, in.	By vendor	40
Shell Height, Seam to Seam, in.	By vendor	Length 90
Overall Height, In.	By vendor	105
Head style / Flange height, in.	By vendor/ By vendor	KORBOGGEN
Shell Thickness, in.	By vendor	0.12
Head thickness, in.	By vendor	0.16
Head Volume, Ft^3	By vendor	
Vessel Volume, Ft^3	By vendor	57(OTAL)
Vessel Support Legs, Qty.	By vendor	4
Nozzles / Manways	Size / Type / Class	
A - Inlet, in.	By vendor	3/150#
B - Outlet, in.	By vendor	3/150#
C - Media Fill, in	By vendor	20
D - Media Removal, in	By vendor	8
E - Pressure Relief, in	By vendor	2

2	11/27/2012	Issue for Purchase	JS	MZA	APF	
1	11/13/2012	Re-issued for Bid	JS	MZA	APF	
0	3/29/12	Issued for Bid	WMP	MZA	APF	
No.	Date	Description	By	Chk'd	App'd	App'd

Information and know-how hereon are confidential and proprietary property of Abener Teyma Mojave General Partnership and may not be used, reproduced, or revealed to others except in accordance with the terms of a contract with or other written permission of Abener Teyma Mojave General Partnership.

Specification For Carbon Filters				
	Job No.:	120010	Spec. No.:	6007-ESP-ATP-44-62-F206
	Item No.:	See Spec	No. Req'd.:	See spec
	Project:	Mojave		
	Ref.:		Issue: 1	Dated : 11/28/12

Data Sheets	Vendor:	
CARBON FILTERS MF-206C	**ABENER / TEYMA REQUIREMENT**	**VENDOR INFORMATION**
F1 - Upper Manway, in	24"	20
F2 - Lower Manway, in	30"	NONE
Materials of Construction		
Shell	SA 182 /SS304	SA 182 or similar (AISI304)
Head	SA 182 /SS304	SA 182 or similar (AISI304)
Internal Supports	SA 182 /SS304	SA 182 or similar (AISI304)
Internal Piping	SA 182 /SS304	SA 182 or similar (AISI304)
Media		
Media	Activated Carbon	Activated Carbon
Media Vendor	**By vendor**	CONDORCHEM
Media Type / Designation	**Coal Pellet**	Pellet 4 mm
Depth, in	By vendor	51
Media life (mas flow rate/max concent .)	By vendor	63days/15 days

2	11/27/2012	Issue for Purchase	JS	MZA	APF	
1	11/13/2012	Re-issued for Bid	JS	MZA	APF	
0	3/29/12	Issued for Bid	WMP	MZA	APF	
No.	Date	Description	By	Chk'd	App'd	App'd

Information and know-how hereon are confidential and proprietary property of Abener Teyma Mojave General Partnership and may not be used, reproduced, or revealed to others except in accordance with the terms of a contract with or other written permission of Abener Teyma Mojave General Partnership.

Specification For Carbon Filters	Job No.: 120010	Spec. No.: 6007-ESP-ATP-44-62-F206
	Item No.: See Spec	No. Req'd.: See spec
	Project: Mojave	
	Ref.:	Issue: 1 Dated : 11/28/12

Maximum Flow Rate Case

Data Sheets **Vendor:**

CARBON FILTERS MF-206	**ABENER / TEYMA REQUIREMENT**		**VENDOR INFORMATION**	
PERFORMANCE	**Inlet Design**	**Outlet Design**	**Inlet Design**	**Outlet Design**
Expansion Tank Venting				
Total Gas Flow Rate lb/min.	92.89			
Flow Duration, min. /day	40			
Flow Composition, lb/min				
Diphenyl ether	0.0075	By vendor	0.0075	0.0001(*)
Biphenyl	0.0027	By vendor	0.0027	<0.0001(*)
Benzene	0.0908	≤1% of inlet	0.0908	0.0009(**)
Toluene	0.0028	≤1% of inlet	0.0028	<0.0001(**)
Phenol	0.0006	By vendor	0.0006	<0.0001(*)
Nitrogen	92.78	92.78	92.78	92.78
High Boilers	0.0000	By vendor	0.0000	0.0000(*)
Total Low Boilers	0.0942	By vendor	0.0942	0.0009(*)
Total Non-N_2	0.1044	By vendor	0.1044	0.0010(*)
Gas Enthalpy, Btu/lb	10.15	10.15	10.15	10.15
Gas Flow, acfm: (See note 2)	1365.22	By vendor	1365.22	1365.22
Operating Temperature, °F:	120	120	120	120
Operating Pressure, in H_2O:	≤75	1	75-29	ATM
Diff. Pressure @ design flow, in H_2O (Note 3)	≤74		14.8	
Guaranteed VOC Removal	99%		99%	

Notes:

1. Vendor to provide type, size and quantity of filters.
2. ACFM measured at 15 psia and 120 F.
3. Maximum differential pressure across filter set from flange to flange.
4.- (*) Expected/(**)guaranteed

2	11/27/2012	Issue for Purchase	JS	MZA	APF	
1	11/13/2012	Re-issued for Bid	JS	MZA	APF	
0	3/29/12	Issued for Bid	WMP	MZA	APF	
No.	Date	Description	By	Chk'd	App'd	App'd

Information and know-how hereon are confidential and proprietary property of Abener Teyma Mojave General Partnership and may not be used, reproduced, or revealed to others except in accordance with the terms of a contract with or other written permission of Abener Teyma Mojave General Partnership.

Specification For Carbon Filters	Job No.: 120010	Spec. No.: 6007-ESP-ATP-44-62-F206
	Item No.: See Spec	No. Req'd.: See spec
	Project: Mojave	
	Ref.:	Issue: 1 Dated : 11/28/12

Maximum Flow Rate Case

Data Sheets CARBON FILTERS MF-206	Vendor: ABENER / TEYMA REQUIREMENT		VENDOR INFORMATION	
PERFORMANCE	**Inlet Design**	**Outlet Design**	**Inlet Design**	**Outlet Design**
Overflow Tank Venting				
Total Gas Flow Rate lb/min.	14.25			
Flow Duration, min. /day	20			
Flow Composition, lb/min				
Diphenyl ether	0.0105	By vendor	0.0105	0.0001(*)
Biphenyl	0.0038	By vendor	0.0038	<0.0001(*)
Benzene	0.1442	≤1% of inlet	0.1442	0.0014(**)
Toluene	0.0045	≤1% of inlet	0.0045	<0.0001(**)
Phenol	0.0010	By vendor	0.0010	<0.0001(*)
Nitrogen	14.09	14.09	14.09	14.09
High Boilers	0.0001	By vendor	0.0001	<0.0001(*)
Total Low Boilers	0.1497	By vendor	0.1497	0.0015(*)
Total Non-N_2	0.1641	By vendor	0.1641	0.0016(*)
Gas Enthalpy, Btu/lb	15.26	15.26	15.26	15.26
Gas Flow, acfm: (Note 1)	209.35	By vendor	209.35	209.35
Operating Temperature, °F:	120	120	120	120
Operating Pressure, in H_2O	≤29	1"	29-75	ATM
Diff. Pressure @ design flow, in H_2O (Note 3)	≤28		14.8	
Guaranteed VOC Removal	99%		99%	

Notes:

1. Vendor to provide type, size and quantity of filters.
2. ACFM measured at 15 psia and 120 F.
3. Maximum differential pressure across filter set from flange to flange.

4.- (*) Expected/(**)guaranteed

2	11/27/2012	Issue for Purchase	JS	MZA	APF	
1	11/13/2012	Re-issued for Bid	JS	MZA	APF	
0	3/29/12	Issued for Bid	WMP	MZA	APF	
No.	Date	Description	By	Chk'd	App'd	App'd

Information and know-how hereon are confidential and proprietary property of Abener Teyma Mojave General Partnership and may not be used, reproduced, or revealed to others except in accordance with the terms of a contract with or other written permission of Abener Teyma Mojave General Partnership.

Specification For Carbon Filters	Job No.: 120010	Spec. No.: 6007-ESP-ATP-44-62-F206
	Item No.: See Spec	No. Req'd.: See spec
	Project: Mojave	
	Ref.:	Issue: Dated :

Maximum Flow Rate Case

Operating Mode 1: Expansion Tank Venting Duration: 40 minutes

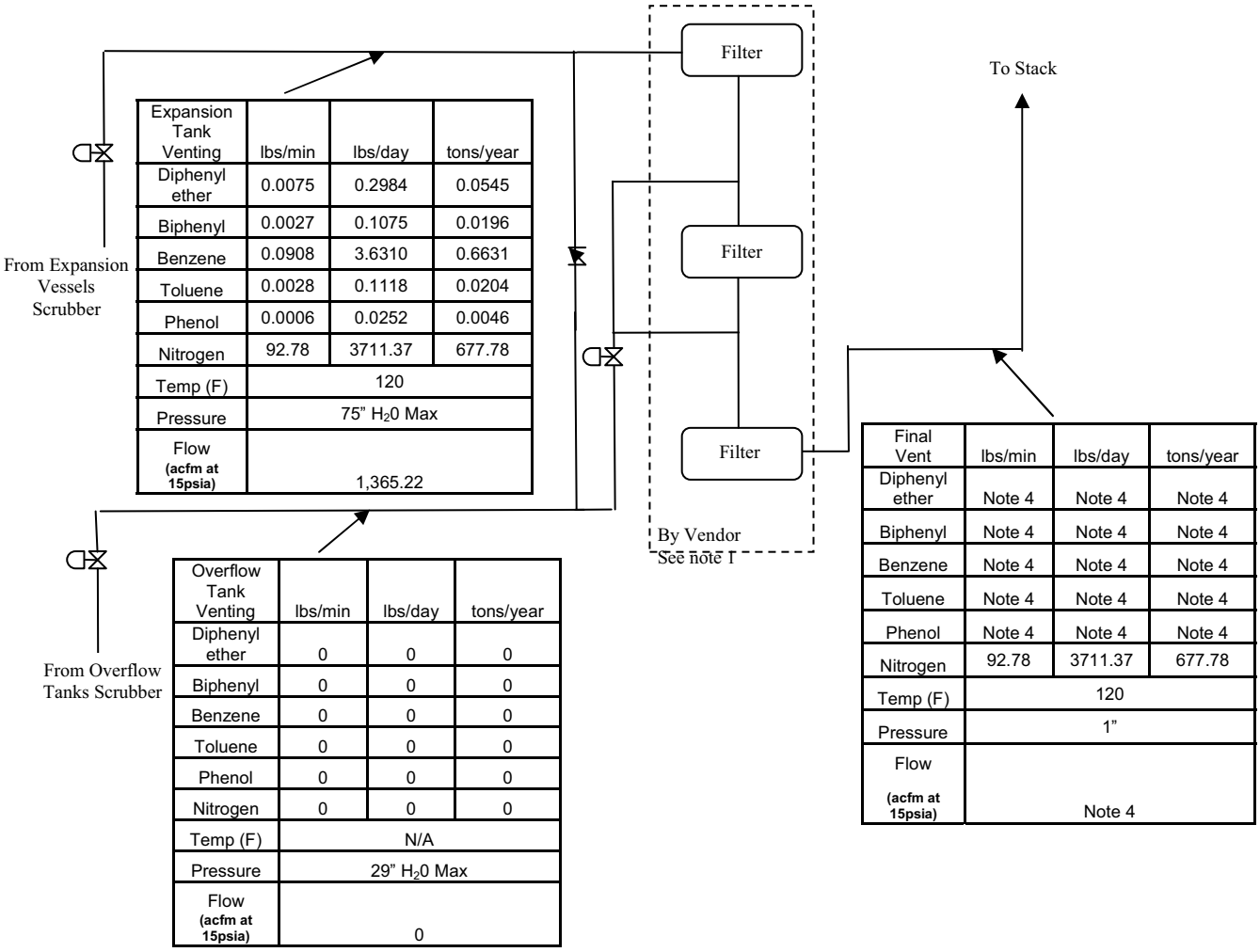

Expansion Tank Venting	lbs/min	lbs/day	tons/year
Diphenyl ether	0.0075	0.2984	0.0545
Biphenyl	0.0027	0.1075	0.0196
Benzene	0.0908	3.6310	0.6631
Toluene	0.0028	0.1118	0.0204
Phenol	0.0006	0.0252	0.0046
Nitrogen	92.78	3711.37	677.78
Temp (F)	120		
Pressure	75" H_20 Max		
Flow (acfm at 15psia)	1,365.22		

Overflow Tank Venting	lbs/min	lbs/day	tons/year
Diphenyl ether	0	0	0
Biphenyl	0	0	0
Benzene	0	0	0
Toluene	0	0	0
Phenol	0	0	0
Nitrogen	0	0	0
Temp (F)	N/A		
Pressure	29" H_20 Max		
Flow (acfm at 15psia)	0		

Final Vent	lbs/min	lbs/day	tons/year
Diphenyl ether	Note 4	Note 4	Note 4
Biphenyl	Note 4	Note 4	Note 4
Benzene	Note 4	Note 4	Note 4
Toluene	Note 4	Note 4	Note 4
Phenol	Note 4	Note 4	Note 4
Nitrogen	92.78	3711.37	677.78
Temp (F)	120		
Pressure	1"		
Flow (acfm at 15psia)	Note 4		

Notes:

1. Vendor to provide type, size and quantity of filters.
2. ACFM measured at 15 psia and 120 F.
3. Maximum differential pressure across filter set from flange to flange.
4. Per vendor's design.

No.	Date	Description	By	Chk'd	App'd	App'd
2	11/29/2012	Issued for Purchase	JS	MZA	APF	
1	11/13/2012	Issued for Bid	JS	MZA	APF	
0	03/29/12	Issued for Bid	WMP	MZA	APF	

Information and know-how hereon are confidential and proprietary property of Abener Teyma Mojave General Partnership and may not be used, reproduced, or revealed to others except in accordance with the terms of a contract with or other written permission of Abener Teyma Mojave General Partnership.

Specification For Carbon Filters	Job No.: 120010	Spec. No.: 6007-ESP-ATP-44-62-F206
	Item No.: See Spec	No. Req'd.: See spec
	Project: Mojave	
	Ref.:	Issue: Dated :

Maximum Flow Rate Case

Operating Mode 2: Overflow Tank Venting Duration: 20 minutes

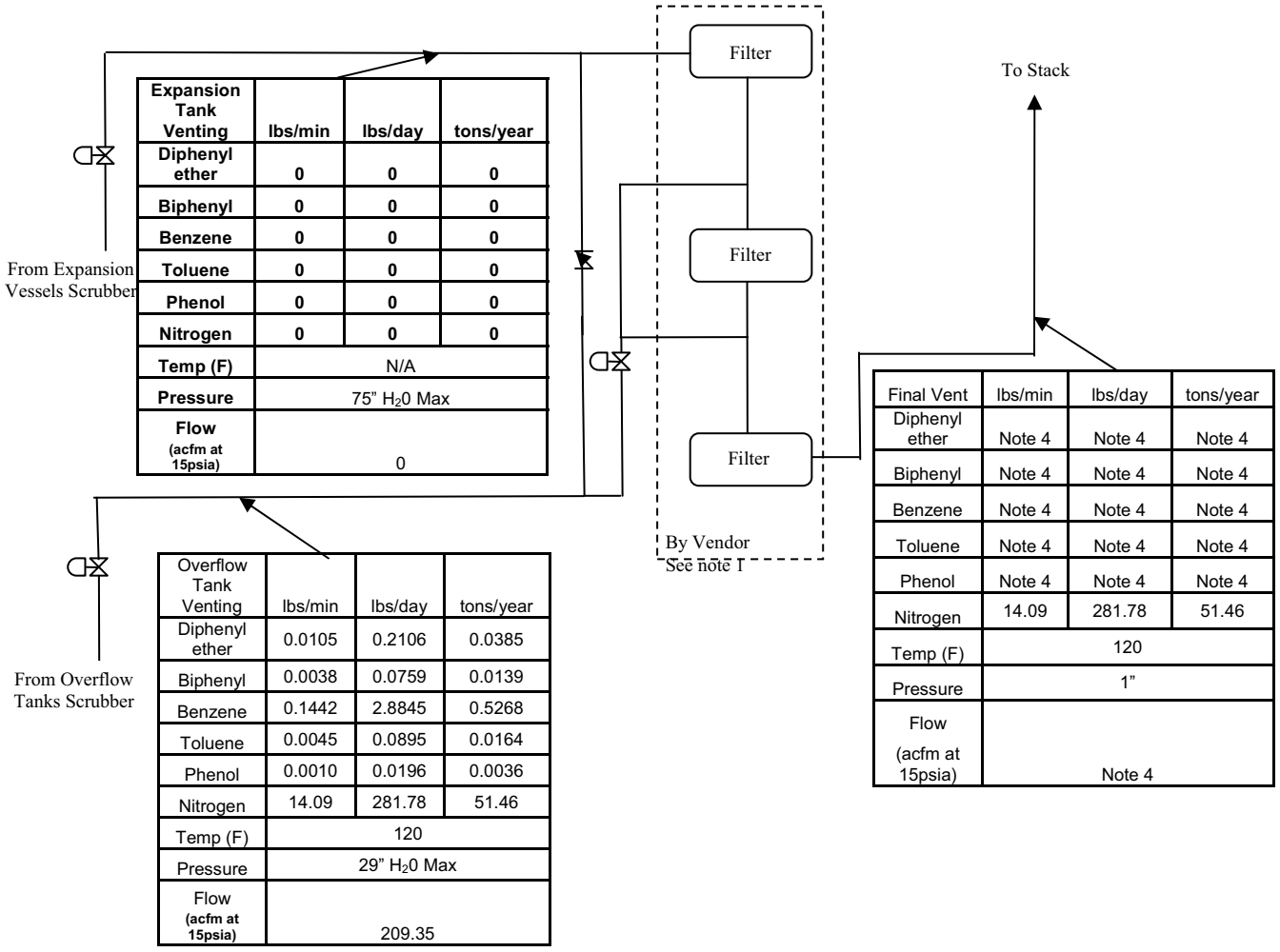

Expansion Tank Venting	lbs/min	lbs/day	tons/year
Diphenyl ether	0	0	0
Biphenyl	0	0	0
Benzene	0	0	0
Toluene	0	0	0
Phenol	0	0	0
Nitrogen	0	0	0
Temp (F)	N/A		
Pressure	75" H_20 Max		
Flow (acfm at 15psia)	0		

Overflow Tank Venting	lbs/min	lbs/day	tons/year
Diphenyl ether	0.0105	0.2106	0.0385
Biphenyl	0.0038	0.0759	0.0139
Benzene	0.1442	2.8845	0.5268
Toluene	0.0045	0.0895	0.0164
Phenol	0.0010	0.0196	0.0036
Nitrogen	14.09	281.78	51.46
Temp (F)	120		
Pressure	29" H_20 Max		
Flow (acfm at 15psia)	209.35		

Final Vent	lbs/min	lbs/day	tons/year
Diphenyl ether	Note 4	Note 4	Note 4
Biphenyl	Note 4	Note 4	Note 4
Benzene	Note 4	Note 4	Note 4
Toluene	Note 4	Note 4	Note 4
Phenol	Note 4	Note 4	Note 4
Nitrogen	14.09	281.78	51.46
Temp (F)	120		
Pressure	1"		
Flow (acfm at 15psia)	Note 4		

Notes:

1. Vendor to provide type, size and quantity of filters.
2. ACFM measured at 15 psia and 120 F.
3. Maximum differential pressure across filter set from flange to flange.
4. Per vendor's design.

No.	Date	Description	By	Chk'd	App'd	App'd
2	11/29/2012	Issued for Purchase	JS	MZA	APF	
1	11/13/2012	Issued for Bid	JS	MZA	APF	
0	03/29/12	Issued for Bid	WMP	MZA	APF	

Information and know-how hereon are confidential and proprietary property of Abener Teyma Mojave General Partnership and may not be used, reproduced, or revealed to others except in accordance with the terms of a contract with or other written permission of Abener Teyma Mojave General Partnership.

Specification For Carbon Filters	Job No.: 120010	Spec. No.: 6007-ESP-ATP-44-62-F206
	Item No.: See Spec	No. Req'd.: See spec
	Project: Mojave	
	Ref.:	Issue: Dated :

Maximum Concentration Case

Data Sheets CARBON FILTERS MF-206	ABENER / TEYMA REQUIREMENT		Vendor: VENDOR INFORMATION	
PERFORMANCE	**Inlet Design**	**Outlet Design**	**Inlet Design**	**Outlet Design**
Expansion Tank Venting				
Total Gas Flow Rate lb/min.	81.40			
Flow Duration, min. /day	40			
Flow Composition, lb/min				
Diphenyl ether	0.0056	By vendor	0.0056	0.0001(*)
Biphenyl	0.0020	By vendor	0.0020	<0.0001(*)
Benzene	0.3832	≤1% of inlet	0.3832	0.0038 (**)
Toluene	0.0147	≤1% of inlet	0.0147	0.0001(**)
Phenol	0.0037	By vendor	0.0037	<0.0001(*)
Nitrogen	80.99	80.99	80.99	80.99
High Boilers	0.0003	By vendor	0.0003	<0.0001(*)
Total Low Boilers	0.4015	By vendor	0.4015	0.0040(*)
Total Non-N_2	0.4094	By vendor	0.4094	0.0041(*)
Gas Enthalpy, Btu/lb	11.85	11.85	11.85	11.85
Gas Flow, acfm: (See note 2)	1193.30	By vendor	1193.30	1193.30
Operating Temperature, °F:	120	120	120	120
Operating Pressure, in H_2O:	≤75	1	75-29	ATM
Diff. Pressure @ design flow, in H_2O (Note 3)	≤74		14.8	
Guaranteed VOC Removal	99%		99%	

Notes:

1. Vendor to provide type, size and quantity of filters.
2. ACFM measured at 15 psia and 120 F.
3. Maximum differential pressure across filter set from flange to flange.

4.- (*) Expected/(**)guaranteed

No.	Date	Description	By	Chk'd	App'd	App'd
2	11/29/2012	Issued for Purchase	JS	MZA	APF	
1	11/13/2012	Issued for Bid	JS	MZA	APF	
0	03/29/12	Issued for Bid	WMP	MZA	APF	

Information and know-how hereon are confidential and proprietary property of Abener Teyma Mojave General Partnership and may not be used, reproduced, or revealed to others except in accordance with the terms of a contract with or other written permission of Abener Teyma Mojave General Partnership.

Specification For Carbon Filters	Job No.: 120010	Spec. No.: 6007-ESP-ATP-44-62-F206
	Item No.: See Spec	No. Req'd.: See spec
	Project: Mojave	
	Ref.:	Issue: Dated :

Maximum Concentration Case

Data Sheets CARBON FILTERS MF-206	ABENER / TEYMA REQUIREMENT		Vendor: VENDOR INFORMATION	
PERFORMANCE	**Inlet Design**	**Outlet Design**	**Inlet Design**	**Outlet Design**
Overflow Tank Venting				
Total Gas Flow Rate lb/min.	13.55			
Flow Duration, min. /day	20			
Flow Composition, lb/min				
Diphenyl ether	0.0084	By vendor	0.0084	0.0001(*)
Biphenyl	0.0030	By vendor	0.0030	<0.0001(*)
Benzene	0.6815	≤1% of inlet	0.6815	0.0068(**)
Toluene	0.0252	≤1% of inlet	0.0252	0.0003(**)
Phenol	0.0060	By vendor	0.0060	0.0001(*)
Nitrogen	12.83	12.83	12.83	12.83
High Boilers	0.0004	By vendor	0.0004	<0.0001(*)
Total Low Boilers	0.7127	By vendor	0.7127	0.0071(*)
Total Non-N_2	0.7245	By vendor	0.7245	0.0072(*)
Gas Enthalpy, Btu/lb	33.80	33.80	33.80	33.80
Gas Flow, acfm: (Note 1)	193.59	By vendor	19.59	193.59
Operating Temperature, °F:	120	120	120	120
Operating Pressure, in H_2O	≤29	1"	29-75	ATM
Diff. Pressure @ design flow, in H_2O (Note 3)	≤28		14.8	
Guaranteed VOC Removal	99%		99%	

Notes:

1. Vendor to provide type, size and quantity of filters.
2. ACFM measured at 15 psia and 120 F.
3. Maximum differential pressure across filter set from flange to flange.

4.- (*) Expected/(**)guaranteed

No.	Date	Description	By	Chk'd	App'd	App'd
2	11/29/2012	Issued for Purchase	JS	MZA	APF	
1	11/13/2012	Issued for Bid	JS	MZA	APF	
0	03/29/12	Issued for Bid	WMP	MZA	APF	

Information and know-how hereon are confidential and proprietary property of Abener Teyma Mojave General Partnership and may not be used, reproduced, or revealed to others except in accordance with the terms of a contract with or other written permission of Abener Teyma Mojave General Partnership.

Specification For Carbon Filters	Job No.: 120010	Spec. No.: 6007-ESP-ATP-44-62-F206
	Item No.: See Spec	No. Req'd.: See spec
	Project: Mojave	
	Ref.:	Issue: Dated :

Maximum Concentration Case

Operating Mode 1: Expansion Tank Venting Duration: 40 minutes

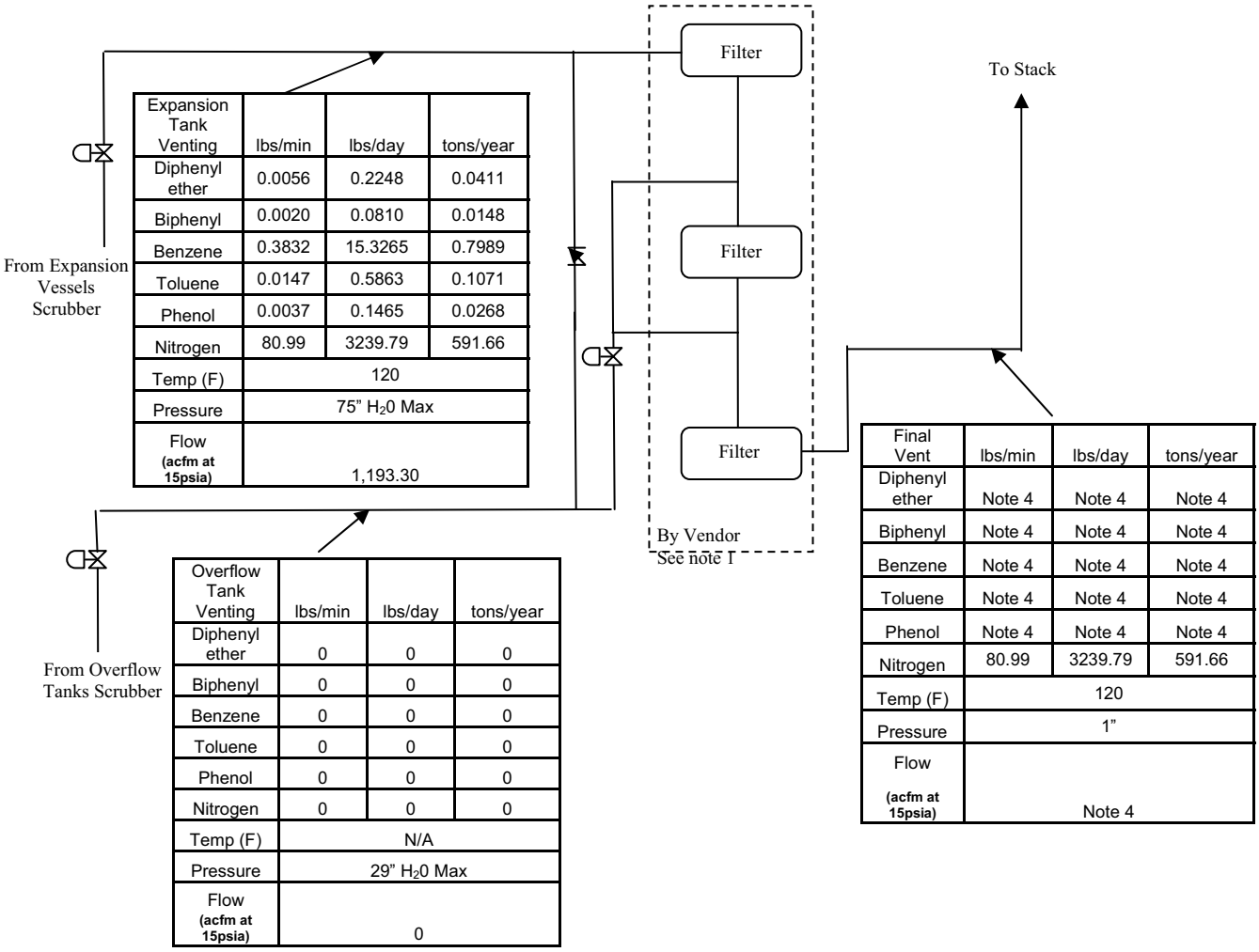

Expansion Tank Venting	lbs/min	lbs/day	tons/year
Diphenyl ether	0.0056	0.2248	0.0411
Biphenyl	0.0020	0.0810	0.0148
Benzene	0.3832	15.3265	0.7989
Toluene	0.0147	0.5863	0.1071
Phenol	0.0037	0.1465	0.0268
Nitrogen	80.99	3239.79	591.66
Temp (F)	120		
Pressure	75" H_20 Max		
Flow (acfm at 15psia)	1,193.30		

Overflow Tank Venting	lbs/min	lbs/day	tons/year
Diphenyl ether	0	0	0
Biphenyl	0	0	0
Benzene	0	0	0
Toluene	0	0	0
Phenol	0	0	0
Nitrogen	0	0	0
Temp (F)	N/A		
Pressure	29" H_20 Max		
Flow (acfm at 15psia)	0		

Final Vent	lbs/min	lbs/day	tons/year
Diphenyl ether	Note 4	Note 4	Note 4
Biphenyl	Note 4	Note 4	Note 4
Benzene	Note 4	Note 4	Note 4
Toluene	Note 4	Note 4	Note 4
Phenol	Note 4	Note 4	Note 4
Nitrogen	80.99	3239.79	591.66
Temp (F)	120		
Pressure	1"		
Flow (acfm at 15psia)	Note 4		

1. Vendor to provide type, size and quantity of filters.
2. ACFM measured at 15 psia and 120 F.
3. Maximum differential pressure across filter set from flange to flange.
4. Per vendor's design.

No.	Date	Description	By	Chk'd	App'd	App'd
2	11/29/2012	Issued for Purchase	JS	MZA	APF	
1	11/13/2012	Issued for Bid	JS	MZA	APF	
0	03/29/12	Issued for Bid	WMP	MZA	APF	

Information and know-how hereon are confidential and proprietary property of Abener Teyma Mojave General Partnership and may not be used, reproduced, or revealed to others except in accordance with the terms of a contract with or other written permission of Abener Teyma Mojave General Partnership.

Specification For Carbon Filters	Job No.: 120010	Spec. No.: 6007-ESP-ATP-44-62-F206
	Item No.: See Spec	No. Req'd.: See spec
	Project: Mojave	
	Ref.:	Issue: Dated :

Maximum Concentration Case

Operating Mode 2: Overflow Tank Venting Duration: 20 minutes

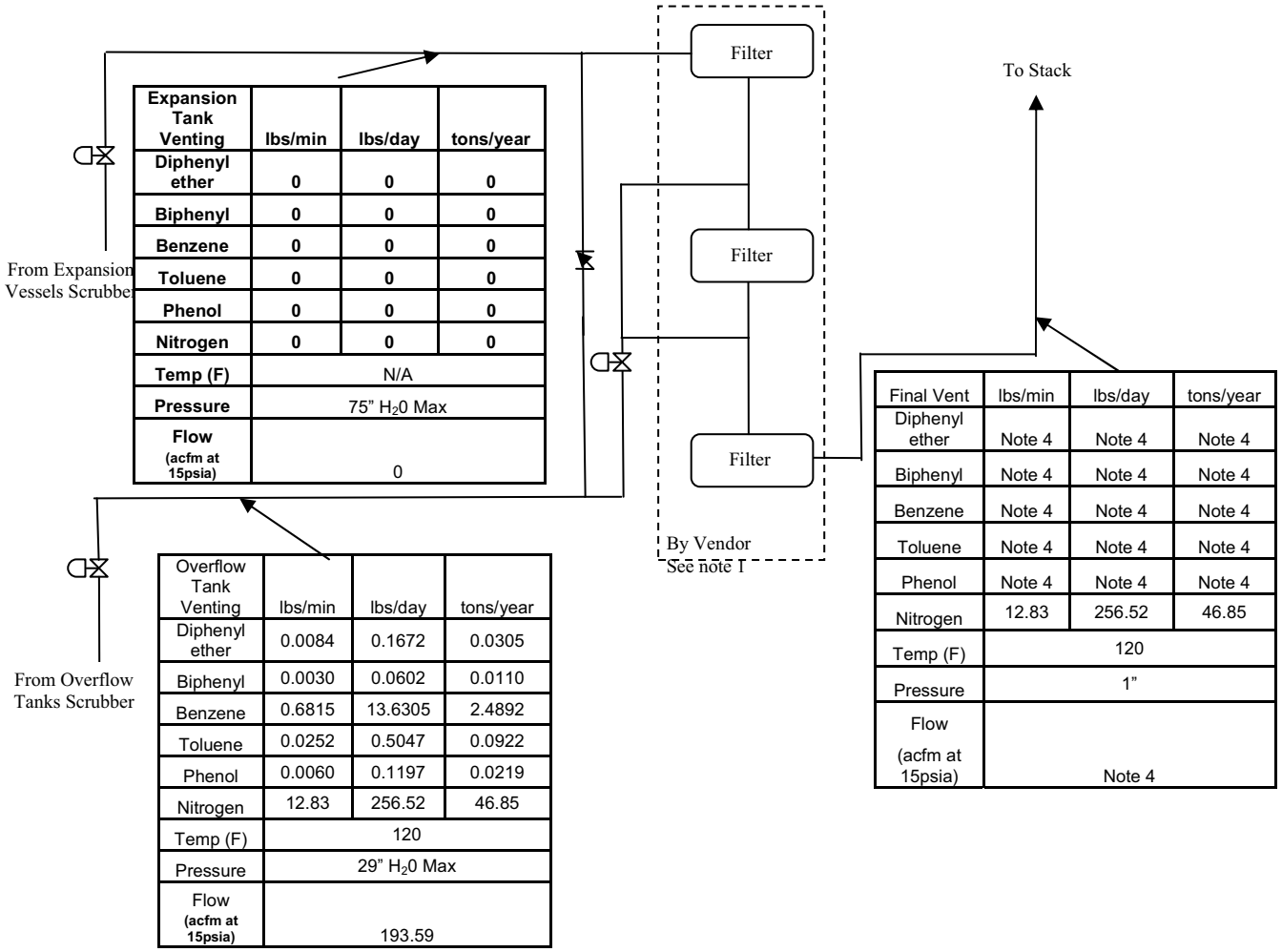

Expansion Tank Venting	lbs/min	lbs/day	tons/year
Diphenyl ether	0	0	0
Biphenyl	0	0	0
Benzene	0	0	0
Toluene	0	0	0
Phenol	0	0	0
Nitrogen	0	0	0
Temp (F)	N/A		
Pressure	75" H_20 Max		
Flow (acfm at 15psia)	0		

Overflow Tank Venting	lbs/min	lbs/day	tons/year
Diphenyl ether	0.0084	0.1672	0.0305
Biphenyl	0.0030	0.0602	0.0110
Benzene	0.6815	13.6305	2.4892
Toluene	0.0252	0.5047	0.0922
Phenol	0.0060	0.1197	0.0219
Nitrogen	12.83	256.52	46.85
Temp (F)	120		
Pressure	29" H_20 Max		
Flow (acfm at 15psia)	193.59		

Final Vent	lbs/min	lbs/day	tons/year
Diphenyl ether	Note 4	Note 4	Note 4
Biphenyl	Note 4	Note 4	Note 4
Benzene	Note 4	Note 4	Note 4
Toluene	Note 4	Note 4	Note 4
Phenol	Note 4	Note 4	Note 4
Nitrogen	12.83	256.52	46.85
Temp (F)	120		
Pressure	1"		
Flow (acfm at 15psia)	Note 4		

Notes:

1. Vendor to provide size and quantity of filters.
2. ACFM measured at 15 psia and 120 F.
3. Maximum differential pressure across filter set from flange to flange.
4. Per vendor's design.

No.	Date	Description	By	Chk'd	App'd	App'd
2	11/29/2012	Issued for Purchase	JS	MZA	APF	
1	11/13/2012	Issued for Bid	JS	MZA	APF	
0	03/29/12	Issued for Bid	WMP	MZA	APF	

Information and know-how hereon are confidential and proprietary property of Abener Teyma Mojave General Partnership and may not be used, reproduced, or revealed to others except in accordance with the terms of a contract with or other written permission of Abener Teyma Mojave General Partnership.

Specification For Carbon Filters	Job No.: 120010	Spec. No.: 6007-ESP-ATP-44-62-F206
	Item No.: See Spec	No. Req'd.: See spec
	Project: Mojave	
	Ref.:	Issue: Dated :

No.	Date	Description	By	Chk'd	App'd	App'd
2	11/29/2012	Issued for Purchase	JS	MZA	APF	
1	11/13/2012	Issued for Bid	JS	MZA	APF	
0	03/29/12	Issued for Bid	WMP	MZA	APF	

Information and know-how hereon are confidential and proprietary property of Abener Teyma Mojave General Partnership and may not be used, reproduced, or revealed to others except in accordance with the terms of a contract with or other written permission of Abener Teyma Mojave General Partnership.

Specification For HTF Scrubbers	Job No.: 120010	Spec. No.: 6007-ESP-ATP-44-62-V208
	Item No.: See Spec	No. Req'd.: 4
	Project: Mojave	
	Ref.:	Issue: 1 Dated : 11/13/12

Instructions:

1. Initialing (By/Chk'd/App'd) required on cover sheet only. All other title block information must be included on all pages.

2. Revisions are identified in the body of the Specification.

Rev. No.	Date	By	Chk'd	App'd	Description of Revision Including Page Numbers
0	21 Oct 2011	WMP	MZA	TS APF	Issued For Quotes
1	**13 Nov 2012**	**SMR**	**MZA**	**APF**	**Issued For Purchase**

1	11/13/12	Issued For Purchase	SMR	MZA	APF	
0	10/21/11	Issued For Quotes	WMP	MZA	APF	TS
No.	Date	Description	By	Chk'd	App'd	App'd

Information and know-how hereon are confidential and proprietary property of Abener Teyma Mojave General Partnership and may not be used, reproduced, or revealed to others except in accordance with the terms of a contract with or other written permission of Abener Teyma Mojave General Partnership.

Specification For HTF Scrubbers	Job No.: 120010	Spec. No.: 6007-ESP-ATP-44-62-V208
	Item No.: See Spec	No. Req'd.: 4
	Project: Mojave	
	Ref.:	Issue: 1 Dated : 11/13/12

1. Project Summary

1.1 The project consists of two, 140 MW, solar thermal powered electric generating plants, referred to as Alpha Plant and Beta Plant. The plants will be built on adjacent sites in an unincorporated area of San Bernardino County near Hinkley, California. The plant sites are located approximately six miles north of highway CA-58 on Harper Lake Road, approximately 20 miles west of Barstow.

1.2 The Vendor shall furnish two (2) HTF Overflow Tank Vent Scrubbers, one (1) per plant site, and two (2) HTF Expansion Tank Vent Scrubbers, one (1) per plant site, meeting the requirements set forth in this specification. This specification covers the minimum requirements for the performance, design, materials, fabrication, testing and delivery of the scrubbers.

2. General

2.1 The attachments identified in this document are considered to be part of this specification. Attached specifications shall be met and followed by the Vendor in full. All drawings and documents included in this package are considered "Contract Documents".

2.2 Definitions

a. "Vendor" or "vendor" shall mean **The Clean Air Group, A Croll Reynolds Company, supplier of the** HTF Overflow Tank Vent Scrubber and HTF Expansion Tank Vent Scrubber for which this specification is intended.

b. "Engineer", "Purchaser" or "Customer" shall mean the "Abener Teyma Mojave General Partnership".

c. "Owner" shall mean "Mojave Solar LLC".

d. "Construction Manager" or "Construction Superintendent" shall mean "Abener Teyma Mojave General Partnership".

2.3 The imperative language of this specification is directed to the Vendor, unless specifically noted otherwise. All directives such as "provide", "perform", "test", etc., are addressed solely to Vendor, whether or not the word "Vendor" is specifically mentioned. Work by Others will be specifically identified.

1	11/13/12	Issued For Purchase	SMR	MZA	APF	
0	10/21/11	Issued For Quotes	WMP	MZA	APF	TS
No.	Date	Description	By	Chk'd	App'd	App'd

Information and know-how hereon are confidential and proprietary property of Abener Teyma Mojave General Partnership and may not be used, reproduced, or revealed to others except in accordance with the terms of a contract with or other written permission of Abener Teyma Mojave General Partnership.

3. Function

The HTF Overflow Tank Vent Scrubber and HTF Expansion Tank Vent Scrubber will be used to remove HTF vapors from the vent gases of the HTF Overflow Tanks and the HTF Low Boiler Condensate Receiver Vessel. The scrubbers will consist of a spray scrubbing tower using a cooled HTF liquid spray and a packing media to condense the HTF vapors including benzene, toluene, and phenol from the vent gases. The vent gases will enter at the bottom of the scrubber and pass upward through the packing media, spray and mist eliminators before being vented out of the scrubber to a carbon filter furnished by others.

4. Operation

The scrubbers will operate intermittently, as required, during the day. The HTF vapors will be displaced at least once daily from the HTF Overflow Tank and the Expansion Vessels due to thermal expansion of the HTF as it is warmed to operating temperatures. The HTF system will be vented as needed to control the maximum system pressures. **The venting and condensing is expected to occur during morning start-up and operate for approximately 40 minutes.**

5. Location

5.1 The scrubbers shall be installed outdoors. For proposal purposes, assume the vessel is attached to an open structure with the bottom nozzle 35 feet above grade.

5.2 Electrical Area Classification - The scrubbers shall be installed in an area that is classified as a Class I Division 2 location per NEC 500.5 (Classification of Locations).

5.3 The equipment shall meet all the design conditions including the seismic and climatic conditions in this specification. Refer to specification 6007-ESP-ATP-00-60-G100 Project Design Criteria, for site specific information.

6. Schedule

Vendor's schedule shall comply with the Abener Teyma schedule. The vendor shall propose the best available delivery.

Information and know-how hereon are confidential and proprietary property of Abener Teyma Mojave General Partnership and may not be used, reproduced, or revealed to others except in accordance with the terms of a contract with or other written permission of Abener Teyma Mojave General Partnership.

7. Performance

7.1 The vendor supplied equipment shall meet the performance requirements defined in this specification and under the column marked "Abener Teyma Requirement" on the Data Sheets; included herein.

7.2 Over time the HTF will degrade and the quantity of low boilers; benzene, toluene, and phenol, in the HTF will increase. The HTF will be cleaned and/or replaced after seven years of operation. The included data sheets describe the concentrations of inlet gases and the allowable concentrations of the outlet gases for both the minimum and maximum concentrations.

7.3 Vendor shall have sole responsibility for meeting the performance requirements. Vendor shall provide all equipment, appurtenances, and accessories required in order to meet this performance.

7.4 The vendor shall determine the optimal scrubber design, including vessel dimensions, packing type and depth, spray nozzle quantity and type, and mist eliminator type and depth.

7.5 The scrubbers (including any auxiliaries) shall be designed and constructed for a minimum service life of 30 years.

8. Scope

8.1 Vendor shall furnish the design, submittal data, fabrication, assembly, inspection, testing, packing, and shipping of the scrubbers as specified herein.

8.2 Vendor shall furnish four (4) HTF Scrubbers.

Equipment Name	Tag Number	Plant Site	Quantity
HTF Overflow Vent Scrubber	A-MV-208	Alpha	1
HTF Expansion Tank Vent Scrubber	A-MV-209	Alpha	1
HTF Overflow Vent Scrubber	B-MV-208	Beta	1
HTF Expansion Tank Vent Scrubber	B-MV-209	Beta	1

Information and know-how hereon are confidential and proprietary property of Abener Teyma Mojave General Partnership and may not be used, reproduced, or revealed to others except in accordance with the terms of a contract with or other written permission of Abener Teyma Mojave General Partnership.

8.3 The scrubbers shall include, but are not limited to, the following:

a. Scrubber vessel
b. Packing
c. Spray nozzles
d. Internal spray manifold
e. Mist eliminators
f. Supports for internal components
g. Manways with davits
h. Vessel nozzles per data sheet.
i. Vessel support lugs / saddles and seismic restraints designed per CBC 2010
j. Anchor bolt sizing and selection
k. Insulation support rings and pins
l. Start up and commissioning spare parts
m. Spare parts for one year of operation.
n. Other items as specified on the Equipment Data Sheets
o. Structural support steel for scrubbers designed per CBC 2010

8.4 Vendor Data

The Vendor shall furnish the Vendor Submittal Data for the HTF Scrubbers as specified here-in. Refer to specification 6007-ESP-ATP-44-62-V208V for additional Vendor Data Requirements.

8.5 Work By Others

The following is out of the scope of this specification:

a. Receiving, unloading, storage and handling of HTF Scrubbers on site.
b. (deleted)
c. Installation of the Scrubbers.
d. Furnishing and installation of anchor bolts.
e. Piping prior to the vessel inlet flanges or after the outlet flanges.
f. Insulation.

Information and know-how hereon are confidential and proprietary property of Abener Teyma Mojave General Partnership and may not be used, reproduced, or revealed to others except in accordance with the terms of a contract with or other written permission of Abener Teyma Mojave General Partnership.

9. Codes and Standards

9.1 At a minimum all applicable portions of the codes and standards listed below shall be followed.

a. AISC - American Institute of Steel Construction
b. AISI – American Iron and Steel Institute
c. ANSI – American National Standards Institute
d. ASME – American Society of Mechanical Engineers
e. ASNT – American Society for Nondestructive Testing
f. ASTM – American Society of Testing Materials
g. AWS – American Welding Society
h. CAL/OSHA – California Occupational Safety and Health Administration
i. CBC – California Building Standards Code (2010)
j. NEC – National Electric Code
k. NFPA – National Fire Protection Association
l. OSHA – Occupational Safety and Health Act
m. SSPC – The Society for Protective Coatings

9.2 Vendor shall meet all federal, state, and local laws and regulations.

9.3 Should there be any conflict between applicable codes, standards, specifications noted herein or vendor's recommendations and those of the locality of the project, the more stringent code shall apply.

10. Design

The vendor shall design the scrubbers to meet the operating conditions and performance requirements set forth in this specification. Any conflicts between the specification, the data sheets and the appropriate codes and standards shall be referred to Abener Teyma for resolution.

10.1 Submittals

10.1.1 Vendor shall provide engineering drawings and calculations for approval prior to the start of fabrication.

10.1.2 Refer to and comply with specification 6007-ESP-ATP-44-62-V208V, Vendor Data Requirements - HTF Scrubbers.

Information and know-how hereon are confidential and proprietary property of Abener Teyma Mojave General Partnership and may not be used, reproduced, or revealed to others except in accordance with the terms of a contract with or other written permission of Abener Teyma Mojave General Partnership.

10.1.3 Approval of Vendor's drawings and calculations is limited to verifying general compliance with specifications and design drawings, and does not imply verification of dimensions, quantities, or calculations. Vendor is not relieved from responsibility for accurate dimensioning, equipment sizing, fabrication to required tolerances, and fabrication fit-up.

10.1.4 U. S. customary units shall be used on all drawings and calculations.

10.1.5 Drawings:

(1) A general arrangement drawing shall be furnished for each vessel, and shall contain the data shown in the appropriate Data Sheet. The location of the vessel marking or nameplate, the size and orientation of all nozzles and connections, and the anchor bolt layout shall also be shown on this drawing.

(2) A separate outline drawing for each vessel shall be furnished with appropriate markings to cross-reference each component (shell plates, heads, nozzles, flanges, forgings, skirt plates, etc.) to the applicable mill test certificates for the steels used in the construction.

(3) Vendor shall provide all drawings that are issued for fabrication, sealed by a licensed Professional Engineer who is legally authorized to practice in the State of California.

(4) Fabrication drawings shall show weld details and shall reference applicable welding procedures. The drawings shall also include impact test requirements, showing (as applicable):

a. Component
b. Thickness for impact purposes
c. Material specification
d. Critical Exposure Temperature
e. Minimum Design Metal Temperature
f. Appropriate Charpy impact requirements (average/minimum values)

Information and know-how hereon are confidential and proprietary property of Abener Teyma Mojave General Partnership and may not be used, reproduced, or revealed to others except in accordance with the terms of a contract with or other written permission of Abener Teyma Mojave General Partnership.

10.1.6 Data and Calculations

(1) Design calculations (including lifting attachments and support lugs) made by the Vendor shall be furnished prior to or along with submission of drawings for approval. When calculations are made using a computer, all input data, assumptions, computer program version used, and a summary of the results shall be furnished.

(2) Vendor shall provide their structural calculation package, sealed by a licensed Professional Engineer who is legally authorized to practice in the State of California.

10.2 Vessels

10.2.1 The HTF Expansion Tank Vent Scrubbers shall be designed, manufactured, tested and stamped by the manufacturer in accordance with the ASME Boiler and Pressure Vessel Code, Section VIII Division 1.

10.2.2 The HTF Overflow Tank Vent Scrubbers shall be designed and manufactured by the manufacturer in accordance with the ASME Boiler and Pressure Vessel Code, Section VIII Division 1. However, the HTF Overflow Tank Vent Scrubbers, being low pressure vessels, shall not require an ASME code stamp.

10.2.3 Vessels shall be designed to withstand internal or external pressure and mechanical loads induced by vessel dead load, process, contents, earthquake, wind and other specified loadings. Wind and earthquake loads shall be in accordance with the Project Design Criteria described in Specification 6007-ESP-ATP-00-60-G001. Load combinations must be appropriately considered. Record design calculations are required.

10.2.4 The minimum insulation design load shall be for 3" thickness on heads and shell using 8 lb. / ft^3 mineral wool insulation with aluminum jacket.

10.2.5 All vessels, with physical dimensions within the allowable limits for shipping, shall be completely shop fabricated and tested before shipment.

Information and know-how hereon are confidential and proprietary property of Abener Teyma Mojave General Partnership and may not be used, reproduced, or revealed to others except in accordance with the terms of a contract with or other written permission of Abener Teyma Mojave General Partnership.

10.2.6 Vendor shall furnish the vessels complete as shown on data sheets and as noted herein and shall include all necessary nozzles, blind flanges, studs, nuts, bolts, clips, support brackets, lifting lugs, davits, and gaskets.

10.2.7 Vessels shall include lifting lugs and tailing lugs, designed by vendor, for use in loading, unloading, and field erection of vessel. Empty weight shall be marked on the vessel by using lettering no less than 6 inches high.

10.2.8 Anchor bolts shall be furnished by Abener Teyma as specified by Vendor. Vendor shall specify bolt material, size, and quantities and provide drawings and loading diagrams for structural design.

10.2.9 Vendor shall extend nozzles a minimum 8 inches outside surface of the vessel. **Vendor shall check the projection to ensure that every nozzle is outside of the insulation by at least 5 inches.**

10.2.10 Each vessel shall include four stainless steel grounding lugs. Grounding lugs shall be a minimum of 3" wide x 3 "tall x ½" thick plates, and shall be made of 304 grade stainless steel. The grounding lugs shall be drilled to match "Burndy Qiklug" type "QA28-2N" which utilizes NEMA bolt spacing. Grounding lugs shall be welded to the vessel support lugs. The lugs shall be oriented so that the holes in the lug are on the vertical centerline.

10.2.11 Materials of construction shall be per the attached data sheet. Where materials of construction are not specified, Vendor shall propose materials for each item as appropriate for the service conditions.

10.2.12 All materials purchased by Vendor shall meet nationally recognized standards unless otherwise approved by Abener Teyma.

10.2.13 All materials shall be compatible with the vessel contents and in accordance with all applicable welding procedures.

10.2.14 Copies of mill test reports for materials shall be provided to Abener Teyma by Vendor.

10.2.15 The design shall be such to avoid any corrosion of vessel equipment.

Information and know-how hereon are confidential and proprietary property of Abener Teyma Mojave General Partnership and may not be used, reproduced, or revealed to others except in accordance with the terms of a contract with or other written permission of Abener Teyma Mojave General Partnership.

10.2.16 The design shall be such to avoid any contamination of the vessel contents once the vessel is put into service.

10.2.17 The layout of weld seams shall be such that it will allow full access for inspection. Circumferential seams shall not be located within a distance of 1-1/2" of any external compression ring, internal ring, support ring, etc. Nozzles and manholes shall not intersect any weld seams, unless approved by Abener Teyma.

10.2.18 Vendor shall provide corrosion allowances as specified by the data sheets.

10.2.19 The minimum required thickness of plate and other structural members shall be that which is necessary to satisfy tension and compression strength requirements for the specified design conditions, plus the corrosion allowance.

10.2.20 All nozzles shall be flush with the inside surface of the vessel wall, unless otherwise specified.

10.2.21 Nozzle flanges and manway flanges shall be the material as indicated on the Data Sheets.

10.2.22 Internal bolting is not allowed unless required for maintenance purposes. Nuts and bolts shall use safety wire, cotter pins or other mechanical methods to prevent bolts from loosening due to vibration.

10.2.23 Vendor to indicate on project drawings the maximum allowable loads on nozzles. Nozzles shall be designed for a minimum of the loads as indicated below.

	Force (pounds)		Moments (foot pounds)	
Nozzle Size (NPS)	Sum	Force	Sum	Force
3 and smaller	750	428	1500	855
4	1400	800	2500	1425
6	2000	1140	6000	3425
8	2800	1600	12000	6850
10	3700	1850	16000	9120
12	4600	2625	25000	14250

Example: NPS-3 nozzle would be subjected to simultaneous loads of F_{axial}= 428. lbs, $F_{circumferential}$= 428. lbs, F_{radial}= 428. lbs , and M_{axial}= 855. ft-lbs, $M_{circumferntial}$= 855. ft-lbs, M_{radial}= 855. ft-lbs

1	11/13/12	Issued For Purchase	SMR	MZA	APF	
0	10/21/11	Issued For Quotes	WMP	MZA	APF	TS
No.	Date	Description	By	Chk'd	App'd	App'd

Information and know-how hereon are confidential and proprietary property of Abener Teyma Mojave General Partnership and may not be used, reproduced, or revealed to others except in accordance with the terms of a contract with or other written permission of Abener Teyma Mojave General Partnership.

10.2.24 Manways

(1) Manways shall be provided for accessing and ventilating the scrubber interior.

(2) Manways shall be located to provide easy access for maintenance and cleaning of the scrubber including cleaning or replacement of the packing, spray nozzles and mist eliminators.

(3) Manway covers shall be equipped with davits and handles to aid in removing and replacing the covers.

10.2.25 Each vessel shall include insulation support rings. Rings shall be provided at the top and bottom tangents. Additional rings shall be provided as required at no more than 10 foot spacing. Rings shall extend 2 inches beyond the shell outside diameter. Rings shall be segmented and detachable for shipment. Attachment brackets shall be continuously welded to the vessel.

10.2.26 Each vessel shall include insulation support pins welded to the bottom head. Insulation will be 3" thick mineral wool. Pins are to be #10 gauge (3.6mm) weld pins 3-1/2" long on 12" centers. The companion 2-1/2" square speed clips shall be shipped with the vessel. The pins shall be carbon steel.

10.2.27 **Any instrumentation provided by the vendor must comply with the attached specification, 6007-ESP-ATP-00-30-M100 (Electrical and Instrument Systems On Packaged Mechanical Equipment)**

10.3 Vessel Internals

10.3.1 The Vendor shall design the scrubber packing, mist eliminators and spray nozzles to allow for removal **through nozzles F1 & F2** for cleaning and maintenance.

10.3.2 The selection of type, size, and depth of packing shall be by the vendor.

10.3.3 The scrubber and packing design shall prevent channeling and provide a uniform gas velocity across the scrubber cross section.

Information and know-how hereon are confidential and proprietary property of Abener Teyma Mojave General Partnership and may not be used, reproduced, or revealed to others except in accordance with the terms of a contract with or other written permission of Abener Teyma Mojave General Partnership.

10.3.4 The maximum pressure drop from the inlet to outlet of the scrubber shall not exceed the value listed in the equipment data sheet. **Vendor to provide the maximum pressure drop across all elements of the scrubber, from inlet to outlet.**

10.3.5 The selection of type, size, and quantity of the spray nozzles shall be by the vendor.

10.3.6 The maximum total flow and inlet pressure of the HTF to the spray nozzles shall be as indicated on the data sheet.

10.3.7 The selection of type, size, and depth of the mist eliminator shall be by the vendor. The mist eliminator shall coalesce and remove entrained HTF droplets from the gas stream to prevent carry over to the carbon filters.

10.4 Insulation and Heat Tracing

10.4.1 Piping and vessel insulation will be mineral wool bats furnished and installed by others.

10.4.2 Aluminum insulation jacketing will be furnished and installed by others.

10.4.3 Vessels and associated piping will be electrically heat traced by others.

10.5 Painting

10.5.1 Vessel exteriors shall be **(deleted) painted according to the attached specification, 6007-ESP-ATP-00-60-N102 (Two Coat System for High Temperature Non-Primed Carbon Steel)** to prevent rust and corrosion during shipping and installation.

10.5.2 Painting vessel interiors is not required. See section 11.17 of this spec.

11. Fabrication

11.1 Any fabrication sub-contracted to others shall require written approval by Abener Teyma.

11.2 All vessels must meet the latest edition of the ASME Boiler and Pressure Vessel Code for shop practices, welding, and stress relieving.

1	11/13/12	Issued For Purchase	SMR	MZA	APF	
0	10/21/11	Issued For Quotes	WMP	MZA	APF	TS
No.	Date	Description	By	Chk'd	App'd	App'd

Information and know-how hereon are confidential and proprietary property of Abener Teyma Mojave General Partnership and may not be used, reproduced, or revealed to others except in accordance with the terms of a contract with or other written permission of Abener Teyma Mojave General Partnership.

11.3 Vessels requiring a Code Stamp must meet the latest edition of the ASME Boiler and Pressure Vessel Code for radiographing, and testing.

11.4 All plate and other material used in the execution of this work shall be new and clean stock, free from surface laminations and other physical imperfections.

11.5 All materials shall be identified throughout fabrication. Material certification shall be provided on request by the Abener Teyma inspector. Material certification test reports shall become a permanent record of the documentation package.

11.6 Machined surfaces which are warped or distorted due to welding, etc., shall be re-machined after these operations are finished, with minimum thickness maintained as specified. Machine surfaces shall be finished to the smoothness limit indicated on the design drawings.

11.7 The axis of any shell nozzle shall be radial and perpendicular to the longitudinal axis of the vessel. Flange face shall be perpendicular to the nozzle axis. All welds protruding beyond the flange face shall be ground flush.

11.8 Flange bolt holes of shell nozzles shall straddle the axial center line.

11.9 Vendor shall prepare the weld end nozzles end face in accordance with ASME B31.3 and ASME B16.25, to match the piping as indicated in the piping specification referenced in this specification. Abener Teyma shall review each weld end nozzle face prior to purging and protection for shipment. Vendor is to protect each weld end nozzle face against damage during handling and transporting.

11.10 All permanent attachments, stiffeners, clip angles, ring angles, etc., shall be joined to vessels by continuous welding, unless approved otherwise by Abener Teyma.

11.11 Remove all sharp edges and burrs.

11.12 All welds and surfaces exposed to vessel contents, its vapor or condensate shall be free of gouges, pits, cracks or other surface defects.

11.13 All welds and materials discovered to be non-compliant through inspection and/or testing shall be fully repaired at vendor's cost.

Information and know-how hereon are confidential and proprietary property of Abener Teyma Mojave General Partnership and may not be used, reproduced, or revealed to others except in accordance with the terms of a contract with or other written permission of Abener Teyma Mojave General Partnership.

11.14 Fabricated location and orientation of nozzles will be reviewed by Abener Teyma. If there are any discrepancies with project documents, the Vendor will make corrections.

11.15 Vendor shall notify Abener Teyma regarding any necessary repair work and have written approval before proceeding.

11.16 Vendor shall provide whatever additional treatment, such as preheat and/or post weld heating, as required for the material being used. Shop drawings must identify such treatments.

11.16.1 For any required heat treatment, Vendor shall provide written procedures for Abener Teyma review.

11.16.2 At completion, Vendor shall provide a Product Certification for PWHT, including a copy of time / temperature chart records.

11.17 To prevent contamination of the vessel contents, Vendor shall mechanically clean the interior surface of the vessel to remove all weld spatter, scale, rust, filings, dirt, etc., as well as all foreign materials.

11.17.1 Mechanical cleaning shall meet all requirements of NACE No. 3 (Commercial Blast Cleaning).

11.17.2 Vendor shall not commence mechanical cleaning until after all testing has been completed.

11.17.3 Vendor shall not commence mechanical cleaning until instructed by Abener Teyma to do so.

11.17.4 At the completion of mechanical cleaning, Vendor shall purge and seal the vessel with an inert gas to a minimum 2 psig.

(1) Warning signs shall be placed by Vendor on the vessel and manway clearly indicating the vessel has an inert gas seal that must be purged before entry.

(2) Method for sealing weld end nozzles shall minimize damage to weld end prep, and minimize any required weld end prep at the job site.

Information and know-how hereon are confidential and proprietary property of Abener Teyma Mojave General Partnership and may not be used, reproduced, or revealed to others except in accordance with the terms of a contract with or other written permission of Abener Teyma Mojave General Partnership.

(3) Sealing with inert gas shall include a pressure gauge that proves purge gas in the vessel. Pressure gauge is to stay with sealed vessel. Pressure gauge is to be protected from damage during shipment. Pressure gauge is to include shut off valve.

(4) **Apply water-soluble rust inhibitor during hydrotest, according to specification 6007-ESP-ATP-00-61-PS010.**

12. Inspection

12.1 Abener Teyma (or an inspector on their behalf) reserves the right to inspect the equipment at any time during the course of fabrication. Abener Teyma retains the right to provide personnel to observe all fabrication work within the scope of the contracted work (including testing and inspection). Such individuals shall be afforded full and free access for these purposes, subject to safety and schedule constraints.

12.2 Inspector means Abener Teyma (or an inspector on their behalf).

12.3 Inspector shall have free access, at all reasonable times, to the areas where the work on equipment is being performed. Vendor shall notify Abener Teyma purchasing department in advance (minimum one week) of scheduled vessel testing to allow time for the Inspector to arrange to be at the test site before testing begins.

12.4 Mill and shop inspection shall not release the Vendor from responsibility for replacing any defective material and for repairing any defective workmanship that may be discovered in the field.

12.5 Vendor's currently qualified welders and procedures under ASME Sec. IX, must be submitted to Inspector for approval. Additional qualifications necessary are to be at vendor's expense.

12.6 All vessels shall be inspected and tested according to the applicable code as listed in the vessel data sheets.

12.7 For any required radiographic examination, a certified copy of a written report confirming that the work was inspected as set forth herein shall be provided when specified. Refer to 6007-ESP-ATP-44-62-V208V Vendor Data Requirements. The report shall include the following:

Information and know-how hereon are confidential and proprietary property of Abener Teyma Mojave General Partnership and may not be used, reproduced, or revealed to others except in accordance with the terms of a contract with or other written permission of Abener Teyma Mojave General Partnership.

a. A summary of inspection of radiographs.
b. Identification of unacceptable radiographs and a statement of the action taken to rectify unsatisfactory welds.

12.8 Tell-tale holes shall be used to pneumatically test all welded attachments prior to hydrostatic testing. Tell-tale holes shall not be plugged during hydrostatic testing of the vessel.

12.9 Vendor shall submit letters of completion to Abener Teyma at least twenty days prior to the requested final inspection date. The equipment must be ready for inspection and the tests run prior to this final inspection request.

12.10 The cost of all tests due to code requirements or manufacturer's test requirements shall be fully borne by vendor.

12.11 A written certification of an acceptable hydrostatic test shall be completed by vendor. The certification shall be forwarded to the individual indicated on the Abener Teyma purchase order.

12.11.1 Asbestos or material containing asbestos shall not be used in the construction or manufacture of the equipment.

12.11.2 A stainless steel tag that includes the Project number, equipment Tag Number and the equipment Purchase Order number shall be fixed to all the associated equipment. The tag shall stand off the vessel, outside of the insulation. The location of the tag shall be determined during drawing review.

13. Shipping

13.1 All parts shall be skidded, boxed, or otherwise suitably prepared for shipment to protect against damage while in transit.

13.2 Vendor shall refer to specification 6007-ESP-ATP-00-60-G121 for shipping and preparation requirements.

14. Installation Information

14.1 The Vendor shall specify with quote any detailed installation requirements.

1	11/13/12	Issued For Purchase	SMR	MZA	APF	
0	10/21/11	Issued For Quotes	WMP	MZA	APF	TS
No.	Date	Description	By	Chk'd	App'd	App'd

Information and know-how hereon are confidential and proprietary property of Abener Teyma Mojave General Partnership and may not be used, reproduced, or revealed to others except in accordance with the terms of a contract with or other written permission of Abener Teyma Mojave General Partnership.

14.2 The Vendor shall include in their quotation one set of any special tools and wrenches required for installation and maintenance.

15. Startup, Training and Field Services

The Vendor shall state all startup, training and field services included in bid, clearly identifying duration, number of people, and specific services provided. The Vendor shall quote any additional assistance on a per diem rate.

16. Qualifications

The Vendor shall furnish equipment, designs, and materials that have been proven by successful operation for no less than five (5) years. Requests to use untried or unproven equipment, designs, or materials must be approved by the Purchaser in writing prior to incorporation into the purchase order.

17. Proposal Requirements

17.1 Vendor shall furnish a quote for the following equipment and services:

17.1.1 All engineering, design, equipment materials, labor, fabrication, testing, inspection, and shipping of the equipment.

17.1.2 All parts and accessories required for complete functional HTF Scrubbers.

17.1.3 Startup and commissioning spare parts with quantities.

17.1.4 Submittal of data as required in the Vendor Data Requirements Specification, 6007-ESP-ATP-44-62-V208V.

17.1.5 Start-up, training and commissioning, clearly identifying duration, number of people, and specific services included in bid. The Vendor shall quote any additional assistance on a per diem rate.

17.1.6 The Vendor shall separately quote one set of any special tools and wrenches required for maintenance.

Information and know-how hereon are confidential and proprietary property of Abener Teyma Mojave General Partnership and may not be used, reproduced, or revealed to others except in accordance with the terms of a contract with or other written permission of Abener Teyma Mojave General Partnership.

17.2 The Vendor's base quotation shall consist of the equipment and services identified herein. Pricing for Purchaser identified options shall be submitted as separate line items. Vendor identified alternatives may be submitted if system improvements and/or cost savings can be realized.

17.3 Comments and exceptions to the specification shall be listed in a separate part of the proposal titled "Exceptions to the Specification". All exceptions shall be listed in this section and shall reference the appropriate specification section. No other exceptions will be allowed. After the purchase order is awarded, the Vendor shall be responsible to satisfy all requirements of this specification except for the agreed upon exceptions. Any requirements that are not included with the Vendor's equipment and are in the equipment specification shall be furnished and installed at the Vendor's expense.

17.4 Vendor shall complete and return the Equipment Data Sheets with the proposal. Failure to submit these sheets will result in an incomplete proposal that may not be considered.

17.5 Vendor shall furnish dimensioned envelope drawings with the proposal. Drawing shall show the location of all connections, supports, estimated weights, and other pertinent data.

17.6 Vendor shall provide minimum clearances required for maintenance, service and operation of the scrubber and its components.

18. Attachments

6007-ESP-ATP-44-62-V208V	Vendor Data Requirements – HTF Scrubbers
6007-ESP-ATP-00-60-G100	Project Design Criteria
6007-ESP-ATP-00-60-G121	Shipping and Preparation Requirements
6007-ESP-ATP-68-61-CS72	Class 150 Carbon Steel
6007-ESP-ATP-68-61-CS30	Class 300 Carbon Steel
6007-ESP-ATP-00-60-N102	**Two Coat System for High Temperature Non-Primed Carbon Steel**
6007-ESP-ATP-00-60-N180	**Shop Applied Paint**
6007-INS-ATM-77-13-0002	**Annex 2 – Document List for Subcontractors and Suppliers**
6007-ESP-ATP-00-30-M100	**Electrical and Instrument Systems On Packaged Mechanical Equipment**
6007-INS-ATM-77-13-0002	**Annex 01 – Specification of Documentation to be sent by Subcontractors and Suppliers**
6007-ESP-ATP-00-61-PS010	**Material and Installation Standards Internal Pipe Cleaning**

1	11/13/12	Issued For Purchase	SMR	MZA	APF	
0	10/21/11	Issued For Quotes	WMP	MZA	APF	TS
No.	Date	Description	By	Chk'd	App'd	App'd

Information and know-how hereon are confidential and proprietary property of Abener Teyma Mojave General Partnership and may not be used, reproduced, or revealed to others except in accordance with the terms of a contract with or other written permission of Abener Teyma Mojave General Partnership.

Specification For HTF Scrubbers	Job No.: 120010	Spec. No.: 6007-ESP-ATP-44-62-V208
	Item No.: See Spec	No. Req'd.: 4
	Project: Mojave	
	Ref.:	Issue: 1 Dated : 11/13/12

HTF Overflow Tank Vent Scrubbers, A-MV-208 and B-MV-208

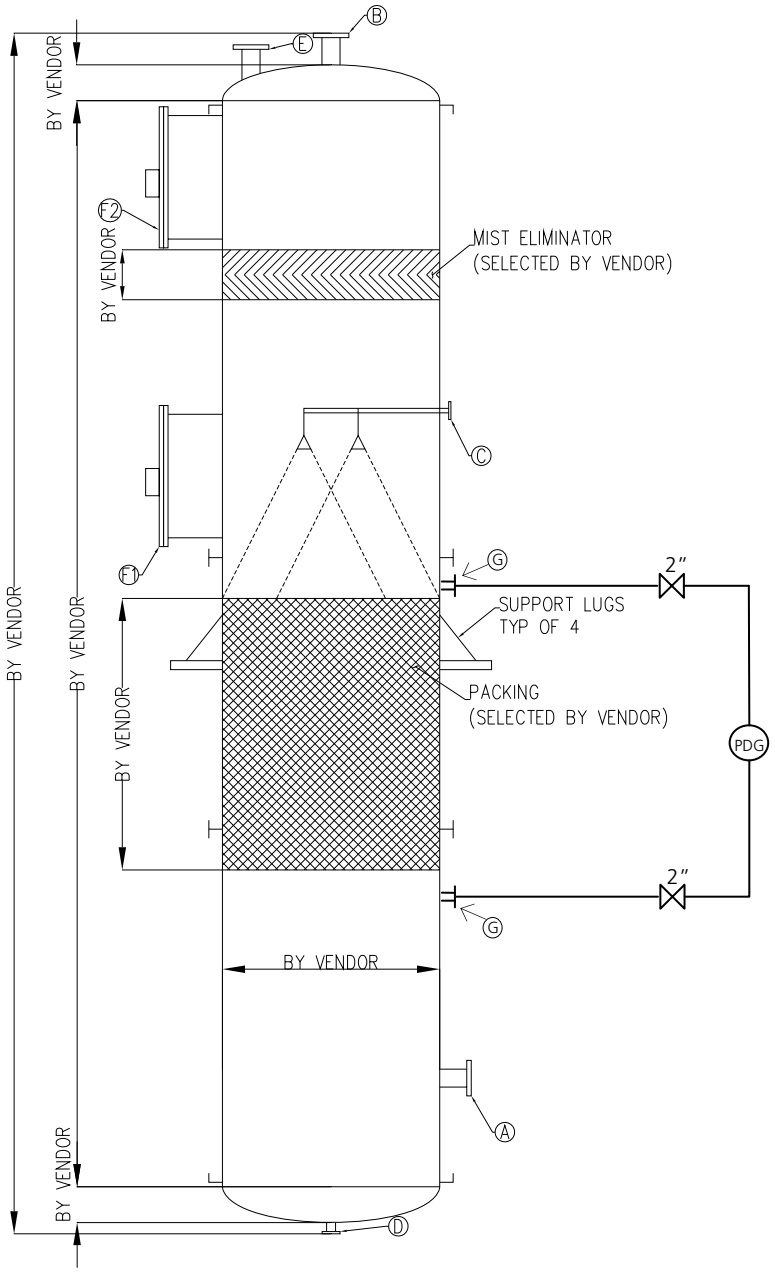

1	11/13/12	Issued For Purchase	SMR	MZA	APF	
0	10/21/11	Issued For Quotes	WMP	MZA	APF	TS
No.	Date	Description	By	Chk'd	App'd	App'd

Information and know-how hereon are confidential and proprietary property of Abener Teyma Mojave General Partnership and may not be used, reproduced, or revealed to others except in accordance with the terms of a contract with or other written permission of Abener Teyma Mojave General Partnership.

Specification For HTF Scrubbers	Job No.: 120010	Spec. No.: 6007-ESP-ATP-44-62-V208
	Item No.: See Spec	No. Req'd.: 4
	Project: Mojave	
	Ref.:	Issue: 1 Dated : 11/13/12

Data Sheets **Vendor: The Clean Air Group - Croll Reynolds Company (CRC)**

HTF OVERFLOW TANK VENT SCRUBBERS A-MV-208, B-MV-208	ABENER / TEYMA REQUIREMENT	CRC INFORMATION
TYPE	Packed Column	**Low Pressure Packed Column – 20T-16H**
DESIGN AND CONSTRUCTION		
Code:	ASME Sec. VIII Div. 1	**ASME Sec. VIII Div. 1**
Stamp:	Not Required	**Not Required**
Design Pressure: PSIG	2.5 / FV	**2.5 / FV**
Design Temperature: °F	350	**350**
Corrosion Allowance, in	0.0625 in	**0.0625 in**
Dimensions		
Inside Diameter, in.		**20"**
Shell Height, Tan to Tan, in.		**Nominally, 24.5 ft (294")**
Overall Height, In.		**Nominally, 26.5 ft (318")**
Head style / Flange height, in.		**Elliptical head / 10" nominally**
Shell Thickness, in.		**Nominally, 0.25"**
Head thickness, in.		**Nominally, 0.25"**
Vessel Volume, Ft^3		**21.8 ft^3**
Materials of Construction		
Shell	SA516-70	**SA516-70**
Head	SA516-70	**SA516-70**
Internal Supports	316 SS	**316SS**
Packing		
Height, in		**16 ft (192")**
Material / Type		**316SS / 1" High Flow**
Spray Nozzle		
Quantity		**4**
Type / Material	/ 316 SS	**Bete / 316SS**
Flow per Nozzle, gpm		**22**
Required Supply Pressure to Nozzle,PSIG		**Nominally, 10 psig**

1	11/13/12	Issued For Purchase	SMR	MZA	APF	
0	10/21/11	Issued For Quotes	WMP	MZA	APF	TS
No.	Date	Description	By	Chk'd	App'd	App'd

Information and know-how hereon are confidential and proprietary property of Abener Teyma Mojave General Partnership and may not be used, reproduced, or revealed to others except in accordance with the terms of a contract with or other written permission of Abener Teyma Mojave General Partnership.

Specification For HTF Scrubbers	Job No.: 120010	Spec. No.: 6007-ESP-ATP-44-62-V208
	Item No.: See Spec	No. Req'd.: 4
	Project: Mojave	
	Ref.:	Issue: 1 Dated : 11/13/12

Data Sheets **Vendor: The Clean Air Group - Croll Reynolds Company (CRC)**

HTF OVERFLOW TANK VENT SCRUBBERS A-MV-208, B-MV-208	ABENER / TEYMA REQUIREMENT	CRC INFORMATION
Mist Eliminator		
Height, in		**8" overall**
Material / Type		**316SS / Mesh**
Connections	Size / Type / Rating	
A - Gas Inlet, in.	6"/ RF Flg. / Per Code	**6"**
B - Gas Outlet, in.	**8**"/ RF Flg. / Per Code Top center of upper head	**8"**
C - HTF Spray connection, in	4"/ RF Flg./ Per Code	**4"**
D - HTF Condensate Outlet, in	4"/ RF Flg. / Per Code	**4"**
E - Safety Valve	2" /RF Flg / Per code	**2"**
F1 - Upper Manway, in ##	36"/ RF Flg. w/ davit / Per Code	**16"**
F2 - Lower Manway, in ##	36"/ RF Flg. w/ davit / Per Code	**16"**
G – Connections for PDG	2" /RF Flg / Per code	**2"**
Vessel Support Lugs, Qty.	4	**4**
Insulation Support Rings	Required	**Included**
Qty.		**12**
Dimensions		**1"**

Manway size subject to change based on vessel diameter.

Note: Differential Pressure Gauge Nozzles are supplied with isolation valves.

1	11/13/12	Issued For Purchase	SMR	MZA	APF	
0	10/21/11	Issued For Quotes	WMP	MZA	APF	TS
No.	Date	Description	By	Chk'd	App'd	App'd

Information and know-how hereon are confidential and proprietary property of Abener Teyma Mojave General Partnership and may not be used, reproduced, or revealed to others except in accordance with the terms of a contract with or other written permission of Abener Teyma Mojave General Partnership.

Specification For HTF Scrubbers	Job No.: 120010	Spec. No.: 6007-ESP-ATP-44-62-V208
	Item No.: See Spec	No. Req'd.: 4
	Project: Mojave	
	Ref.:	Issue: 1 Dated : 11/13/12

Data Sheets
HTF OVERFLOW TANK VENT SCRUBBERS
A-MV-208, B-MV-208

Vendor: The Clean Air Group - Croll Reynolds Company (CRC)

PERFORMANCE Minimum Concentration	ABENER / TEYMA REQUIREMENT Inlet Design	ABENER / TEYMA REQUIREMENT Outlet Design	CRC INFORMATION Inlet Design	CRC INFORMATION Outlet Design
Total Gas Flow Rate, lb/hr	949	854	**949**	**860.58**
Gas Flow, scfm:	214	201	**214**	**201**
Gas Flow, acfm:	260	208	**260**	**208**
Operating Temperature, °F:	240	120	**240**	**120**
Operating Pressure, psia:	17.2	17.2	**17.2**	**17.2**
Gas Enthalpy, Btu/lb	62.99	14.25	**62.99**	**14.25**
Gas Flow Composition:				
HTF, lb/hr	51.58	0.75	**51.58**	**0.74**
Benzene, lb/hr	46.11	8.15	**46.11**	**7.06**
Toluene, lb/hr	2.14	0.25	**2.14**	**0.24**
Phenol, lb/hr	1.88	0.05	**1.88**	**0.12**
Nitrogen, lb/hr	847	845	**847**	**852.41**
High Boilers, lb/hr	0.23	0.00	**0.23**	**0.01**
Total Low Boilers, lb/hr	50.13	8.46	**50.13**	**7.42**
Total Non-N_2, lb/hr	101.95	9.21	**101.95**	**8.44**
HTF Liquid Flow Rate, lb/hr	45,000	45,094	**45,000**	**45,088.42**
HTF Liquid Flow, GPM:	87.1	87.3	**87.1**	**87.3**
HTF Liquid Temperature, °F:	120	120	**120**	**122.5**
HTF Liquid Pressure, psia:	17.2	17.2	**17.2**	**17.2**
HTF Liquid Enthalpy, Btu/lb:	-162.9	-163.0	**-162.9**	**-163.0**
HTF / Liquid Flow Composition:				
HTF, lb/hr	44,169	44,220	**44,169**	**44,220.82**
Benzene, lb/hr	197	235	**197**	**236.05**
Toluene, lb/hr	19	21	**19**	**20.9**
Phenol, lb/hr	165	167	**165**	**166.77**
Nitrogen, lb/hr	10	11	**10**	**4.64**
High Boilers, lb/hr	439	440	**439**	**439.23**
Total Low Boilers, lb/hr	382	424	**382**	**423.92**
Total Non-N_2, lb/hr	44,990	45,083	**44,990**	**44,216.18**

No.	Date	Description	By	Chk'd	App'd	App'd
1	11/13/12	Issued For Purchase	SMR	MZA	APF	
0	10/21/11	Issued For Quotes	WMP	MZA	APF	TS

Information and know-how hereon are confidential and proprietary property of Abener Teyma Mojave General Partnership and may not be used, reproduced, or revealed to others except in accordance with the terms of a contract with or other written permission of Abener Teyma Mojave General Partnership.

Specification For HTF Scrubbers	Job No.: 120010	Spec. No.: 6007-ESP-ATP-44-62-V208
	Item No.: See Spec	No. Req'd.: 4
	Project: Mojave	
	Ref.:	Issue: 1 Dated : 11/13/12

Vendor: The Clean Air Group - Croll Reynolds Company (CRC)

Data Sheets
HTF OVERFLOW TANK VENT SCRUBBERS
A-MV-208, B-MV-208

PERFORMANCE Maximum Concentration	**Inlet Design**	**Outlet Design**	**Inlet Design**	**Outlet Design**
Total Gas Flow Rate, lb/hr	1,087	809	**1,087**	**811.58**
Gas Flow, scfm:	208	186	**208**	**186**
Gas Flow, acfm:	260	192	**260**	**169.5**
Operating Temperature, °F:	240	120	**240**	**120**
Operating Pressure, psia:	17.2	17.2	**17.2**	**17.2**
Gas Enthalpy, Btu/lb	142.93	32.04	**142.93**	**32.04**
Gas Flow Composition:				
HTF, lb/hr	45.11	0.60	**45.11**	**0.59**
Benzene, lb/hr	244.10	38.91	**244.10**	**33.8**
Toluene, lb/hr	13.38	1.41	**13.38**	**1.37**
Phenol, lb/hr	12.69	0.32	**12.69**	**0.72**
Nitrogen, lb/hr	770	768	**770**	**775.04**
High Boilers, lb/hr	1.57	0.02	**1.57**	**0.06**
Total Low Boilers, lb/hr	270.16	40.65	**270.16**	**35.89**
Total Non-N_2, lb/hr	316.85	41.26	**316.85**	**43.58**
HTF Liquid Flow Rate, lb/hr	45,000	45,278	**45,000**	**45,275**
HTF Liquid Flow, GPM:	87.3	87.9	**87.3**	**87.9**
HTF Liquid Temperature, °F:	120	120	**120**	**124.8**
HTF Liquid Pressure, psia:	17.2	17.2	**17.2**	**17.2**
HTF Liquid Enthalpy, Btu/lb:	-156.20	-154.83	**-156.20**	**-154.83**
HTF / Liquid Flow Composition:				
HTF, lb/hr	39,601	39,646	**39,601**	**39,644**
Benzene, lb/hr	1,070	1,275	**1,070**	**1,280**
Toluene, lb/hr	125	137	**125**	**137**
Phenol, lb/hr	1,143	1,155	**1,143**	**1,155**
Nitrogen, lb/hr	10	12	**10**	**4.96**
High Boilers, lb/hr	3,052	3,054	**3,052**	**3,053.44**
Total Low Boilers, lb/hr	2,337	2,567	**2,337**	**2,572**
Total Non-N_2, lb/hr	44,990	45,266	**44,990**	**45,270**

No.	Date	Description	By	Chk'd	App'd	App'd
1	11/13/12	Issued For Purchase	SMR	MZA	APF	
0	10/21/11	Issued For Quotes	WMP	MZA	APF	TS

Information and know-how hereon are confidential and proprietary property of Abener Teyma Mojave General Partnership and may not be used, reproduced, or revealed to others except in accordance with the terms of a contract with or other written permission of Abener Teyma Mojave General Partnership.

Specification For HTF Scrubbers	Job No.: 120010	Spec. No.: 6007-ESP-ATP-44-62-V208
	Item No.: See Spec	No. Req'd.: 4
	Project: Mojave	
	Ref.:	Issue: 1 Dated : 11/13/12

HTF Expansion Vessel Vent Scrubber, A-MV-209 and B-MV-209

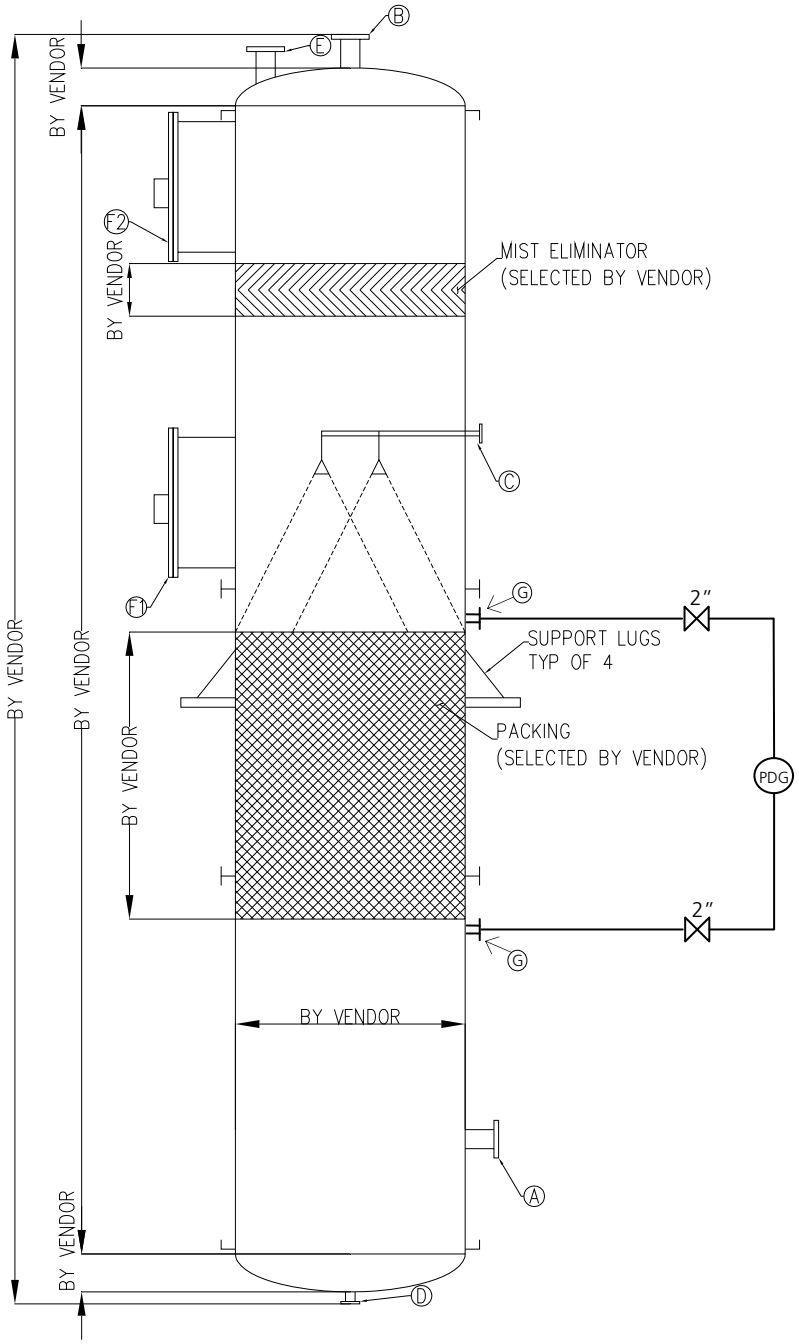

1	11/13/12	Issued For Purchase	SMR	MZA	APF	
0	10/21/11	Issued For Quotes	WMP	MZA	APF	TS
No.	Date	Description	By	Chk'd	App'd	App'd

Information and know-how hereon are confidential and proprietary property of Abener Teyma Mojave General Partnership and may not be used, reproduced, or revealed to others except in accordance with the terms of a contract with or other written permission of Abener Teyma Mojave General Partnership.

Specification For HTF Scrubbers	Job No.: 120010	Spec. No.: 6007-ESP-ATP-44-62-V208
	Item No.: See Spec	No. Req'd.: 4
	Project: Mojave	
	Ref.:	Issue: 1 Dated : 11/13/12

Data Sheets **Vendor: The Clean Air Group - Croll Reynolds Company (CRC)**

HTF EXPANSION VESSEL VENT SCRUBBERS A-MV-209, B-MV-209	ABENER / TEYMA REQUIREMENT	CRC INFORMATION
TYPE	Packed Column	**High Pressure Packed Column – 36T-16H**
DESIGN AND CONSTRUCTION		
Code:	ASME Sec. VIII Div. 1	**ASME Sec. VIII Div. 1**
Stamp:	Required	**Stamp Required**
Design Pressure: PSIG	200 / Full Vacuum	**200 / Full Vacuum**
Design Temperature: °F	650	**650**
Corrosion Allowance, in	0.0625 in	**0.0625 in**
Dimensions		
Inside Diameter, in.		**36"**
Shell Height, Tan to Tan, in.		**Nominally, 26.7 ft (320")**
Overall Height, In.		**Nominally, 30 ft (360")**
Head style / Flange height, in.		**Elliptical / 18" nominally**
Shell Thickness, in.		**0.25"**
Head thickness, in.		**0.25"**
Vessel Volume, Ft^3		**71 ft^3**
Materials of Construction		
Shell	SA516-70	**SA516-70**
Head	SA516-70	**SA516-70**
Internal Supports	316 SS	**316SS**
Packing		
Height, in		**16 ft (192")**
Material / Type		**316SS / 2" High Flow**
Spray Nozzle		
Quantity		**4**
Type / Material	/ 316 SS	**Bete / 316SS**
Flow per Nozzle,		**22**
Required Supply Pressure to Nozzle,PSIG		**Nominally, 10 psig**

No.	Date	Description	By	Chk'd	App'd	App'd
1	11/13/12	Issued For Purchase	SMR	MZA	APF	
0	10/21/11	Issued For Quotes	WMP	MZA	APF	TS

Information and know-how hereon are confidential and proprietary property of Abener Teyma Mojave General Partnership and may not be used, reproduced, or revealed to others except in accordance with the terms of a contract with or other written permission of Abener Teyma Mojave General Partnership.

Specification For HTF Scrubbers	Job No.: 120010	Spec. No.: 6007-ESP-ATP-44-62-V208
	Item No.: See Spec	No. Req'd.: 4
	Project: Mojave	
	Ref.:	Issue: 1 Dated : 11/13/12

Data Sheets **Vendor: The Clean Air Group - Croll Reynolds Company (CRC)**

HTF EXPANSION VESSEL VENT SCRUBBERS A-MV-209, B-MV-209	ABENER / TEYMA REQUIREMENT	CRC INFORMATION
Mist Eliminator		
Height, in		**8" overall**
Material / Type		**316SS / Mesh**
Connections	Size / Type / Rating	
A Gas Inlet, in.	6"/ RF Flg. / Per Code	**6"**
B Gas Outlet, in.	6"/ RF Flg. / Per Code Top center of upper head	**6"**
C HTF Spray connection, in	4"/ RF Flg./ Per Code	**4"**
D HTF Condensate Outlet, in	4"/ RF Flg./ Per Code	**4"**
E Safety Valve	4"/ RF Flg / Per code	**4"**
F1 Upper Manway, in ##	36"/ RF Flg. w/ davit / Per Code	**36"**
F2 Lower Manway, in ##	36"/ RF Flg. w/ davit / Per Code	**36"**
G – Connections for PDG	2" /RF Flg / Per code	**2"**
Vessel Support Lugs, Qty.	4	**4**
Insulation Support Rings	Required	**Required**
Qty.		**16**
Dimensions		**1"**

Manway size subject to change based on vessel diameter.

Note: Differential Pressure Gauge Nozzles are supplied with isolation valves.

1	11/13/12	Issued For Purchase	SMR	MZA	APF	
0	10/21/11	Issued For Quotes	WMP	MZA	APF	TS
No.	Date	Description	By	Chk'd	App'd	App'd

Information and know-how hereon are confidential and proprietary property of Abener Teyma Mojave General Partnership and may not be used, reproduced, or revealed to others except in accordance with the terms of a contract with or other written permission of Abener Teyma Mojave General Partnership.

Specification For HTF Scrubbers	Job No.: 120010	Spec. No.: 6007-ESP-ATP-44-62-V208
	Item No.: See Spec	No. Req'd.: 4
	Project: Mojave	
	Ref.:	Issue: 1 Dated : 11/13/12

Vendor: The Clean Air Group - Croll Reynolds Company (CRC)

Data Sheets **HTF EXPANSION VESSEL VENT SCRUBBERS** **A-MV-209, B-MV-209**	**ABENER / TEYMA REQUIREMENT**		**CRC INFORMATION**	
PERFORMANCE	**Inlet**	**Outlet**	**Inlet**	**Outlet**
Minimum Concentration at Design Flowrate	**Design**	**Design**	**Design**	**Design**
Total Gas Flow Rate, lb/hr	9,588	9,415	**9,588**	**9,495**
Gas Flow, scfm:	2,034	1,989	**2,034**	**1,989**
Gas Flow, acfm:	205	202	**205**	**205**
Operating Temperature, °F:	120	120	**120**	**120**
Operating Pressure, psig:	157	156	**157**	**156**
Gas Enthalpy, Btu/lb	13	9	**13**	**9**
Gas Flow Composition:				
HTF, lb/hr	0.97	0.91	**0.97**	**1.03**
Benzene, lb/hr	65.50	10.07	**65.50**	**9.36**
Toluene, lb/hr	1.92	0.29	**1.92**	**0.33**
Phenol, lb/hr	0.24	0.06	**0.24**	**0.16**
Nitrogen, lb/hr	9,520	9,404	**9,520**	**9,484**
High Boilers, lb/hr	0.00	0.00	**0.00**	**0.01**
Total Low Boilers, lb/hr	67.66	10.42	**67.66**	**9.85**
Total Non-N_2, lb/hr	68.63	11.34	**68.63**	**10.89**
HTF Liquid Flow Rate, lb/hr	45,000	45,173	**45,000**	**45,094.25**
HTF Liquid Flow, GPM:	87.1	87.8	**87.1**	**87.8**
HTF Liquid Temperature, °F:	120	120	**120**	**120**
HTF Liquid Pressure, psia:	174	171	**174**	**171**
HTF Liquid Enthalpy, Btu/lb:	-163	-194	**-163**	**-194**
HTF / Liquid Flow Composition:				
HTF, lb/hr	44,151	44,151	**44,151**	**44,150.67**
Benzene, lb/hr	211	267	**211**	**267.14**
Toluene, lb/hr	21	22	**21**	**22.59**
Phenol, lb/hr	171	171	**171**	**171.08**
Nitrogen, lb/hr	10	126	**10**	**45.77**
High Boilers, lb/hr	437	437	**437**	**437**
Total Low Boilers, lb/hr	403	460	**403**	**306.81**
Total Non-N_2, lb/hr	44,990	45,048	**44,990**	**44,895**

1	11/13/12	Issued For Purchase	SMR	MZA	APF	
0	10/21/11	Issued For Quotes	WMP	MZA	APF	TS
No.	Date	Description	By	Chk'd	App'd	App'd

Information and know-how hereon are confidential and proprietary property of Abener Teyma Mojave General Partnership and may not be used, reproduced, or revealed to others except in accordance with the terms of a contract with or other written permission of Abener Teyma Mojave General Partnership.

Specification For HTF Scrubbers	Job No.: 120010	Spec. No.: 6007-ESP-ATP-44-62-V208
	Item No.: See Spec	No. Req'd.: 4
	Project: Mojave	
	Ref.:	Issue: 1 Dated : 11/13/12

Vendor: The Clean Air Group - Croll Reynolds Company (CRC)

Data Sheets **HTF EXPANSION VESSEL VENT SCRUBBERS** **A-MV-209, B-MV-209** **PERFORMANCE**	**ABENER / TEYMA REQUIREMENT**		**CRC INFORMATION**	
	Inlet	**Outlet**	**Inlet**	**Outlet**
Maximum Concentration at Design Flowrate	**Design**	**Design**	**Design**	**Design**
Total Gas Flow Rate, lb/hr	8,589	8,277	**8,589**	**8,360.61**
Gas Flow, scfm:	1,797	1,748	**1,797**	**1,748**
Gas Flow, acfm:	182	177	**182**	**179.9**
Operating Temperature, °F:	120	120	**120**	**120**
Operating Pressure, psig:	157	157	**157**	**156**
Gas Enthalpy, Btu/lb	22	11	**22**	**11**
Gas Flow Composition:				
HTF, lb/hr	0.53	0.68	**0.53**	**0.78**
Benzene, lb/hr	225.52	42.14	**225.52**	**42.67**
Toluene, lb/hr	7.60	1.52	**7.60**	**1.77**
Phenol, lb/hr	1.01	0.35	**1.01**	**0.93**
Nitrogen, lb/hr	8,354	8,233	**8,354**	**8,314**
High Boilers, lb/hr	0.01	0.03	**0.01**	**0.08**
Total Low Boilers, lb/hr	234.13	44.01	**234.13**	**45.37**
Total Non-N_2, lb/hr	235	45	**235**	**46**
HTF Liquid Flow Rate, lb/hr	45,000	45,312	**45,000**	**45,228**
HTF Liquid Flow, GPM:	87.3	88.3	**87.3**	**88.3**
HTF Liquid Temperature, °F:	120	120	**120**	**121.8**
HTF Liquid Pressure, psia:	174	171	**174**	**170.89**
HTF Liquid Enthalpy, Btu/lb:	-156	-187	**-156**	**-187**
HTF / Liquid Flow Composition:				
HTF, lb/hr	39,503	39,503	**39,503**	**39,502.75**
Benzene, lb/hr	1,148	1,331	**1,148**	**1,330.85**
Toluene, lb/hr	133	139	**133**	**138.85**
Phenol, lb/hr	1,177	1,178	**1,177**	**1,177**
Nitrogen, lb/hr	10	131	**10**	**49.62**
High Boilers, lb/hr	3,029	3,029	**3,029**	**3,028.93**
Total Low Boilers, lb/hr	2,459	2,649	**2,459**	**2,646.78**
Total Non-N_2, lb/hr	44,990	45,180	**44,990**	**45,262.38**

1	11/13/12	Issued For Purchase	SMR	MZA	APF	
0	10/21/11	Issued For Quotes	WMP	MZA	APF	TS
No.	Date	Description	By	Chk'd	App'd	App'd

Information and know-how hereon are confidential and proprietary property of Abener Teyma Mojave General Partnership and may not be used, reproduced, or revealed to others except in accordance with the terms of a contract with or other written permission of Abener Teyma Mojave General Partnership.

Specification For HTF Scrubbers	Job No.: 120010	Spec. No.: 6007-ESP-ATP-44-62-V208
	Item No.: See Spec	No. Req'd.: 4
	Project: Mojave	
	Ref.:	Issue: 1 Dated : 11/13/12

Vendor: The Clean Air Group - Croll Reynolds Company (CRC)

Data Sheets **HTF EXPANSION VESSEL VENT SCRUBBERS** **A-MV-209, B-MV-209**	**ABENER / TEYMA REQUIREMENT**		**CRC INFORMATION**	
PERFORMANCE	**Inlet**	**Outlet**	**Inlet**	**Outlet**
Minimum Concentration at Normal Flowrate	**Design**	**Design**	**Design**	**Design**
Total Gas Flow Rate, lb/hr	5,724	5,571	**5,724**	**5,651.40**
Gas Flow, scfm:	1,214	1,180	**1,214**	**1,180**
Gas Flow, acfm:	123	119	**133.98**	**121.98**
Operating Temperature, °F:	120	120	**120**	**119.9**
Operating Pressure, psig:	157	156	**157**	**156**
Gas Enthalpy, Btu/lb	12.96	9.38	**12.96**	**9.38**
Gas Flow Composition:				
HTF, lb/hr	0.58	0.54	**0.58**	**0.61**
Benzene, lb/hr	40.52	5.21	**40.52**	**5.2**
Toluene, lb/hr	1.16	0.16	**1.16**	**0.18**
Phenol, lb/hr	0.14	0.03	**0.14**	**0.09**
Nitrogen, lb/hr	5,681	5,565	**5,681**	**5,645.32**
High Boilers, lb/hr	0.002	0.003	**0.002**	**0.01**
Total Low Boilers, lb/hr	41.83	5.40	**41.83**	**5.47**
Total Non-N_2, lb/hr	42.41	5.95	**42.41**	**5.68**
HTF Liquid Flow Rate, lb/hr	45,000	45,152	**45,000**	**45,071**
HTF Liquid Flow, GPM:	87.1	87.7	**87.1**	**87.3**
HTF Liquid Temperature, °F:	120	120	**120**	**120.3**
HTF Liquid Pressure, psig:	159	156	**159**	**156**
HTF Liquid Enthalpy, Btu/lb:	-163	-194	**-163**	**-194**
HTF / Liquid Flow Composition:				
HTF, lb/hr	44,169	44,169	**44,169**	**44,169**
Benzene, lb/hr	197	233	**197**	**232.32**
Toluene, lb/hr	19	20	**19**	**19.98**
Phenol, lb/hr	165	165	**165**	**165.05**
Nitrogen, lb/hr	10	125	**10**	**45.68**
High Boilers, lb/hr	439	439	**439**	**438.99**
Total Low Boilers, lb/hr	382	418	**382**	**417.35**
Total Non-N_2, lb/hr	44,990	45,027	**44,990**	**45,025.32**

1	11/13/12	Issued For Purchase	SMR	MZA	APF	
0	10/21/11	Issued For Quotes	WMP	MZA	APF	TS
No.	Date	Description	By	Chk'd	App'd	App'd

Information and know-how hereon are confidential and proprietary property of Abener Teyma Mojave General Partnership and may not be used, reproduced, or revealed to others except in accordance with the terms of a contract with or other written permission of Abener Teyma Mojave General Partnership.

Specification For HTF Scrubbers	Job No.: 120010	Spec. No.: 6007-ESP-ATP-44-62-V208
	Item No.: See Spec	No. Req'd.: 4
	Project: Mojave	
	Ref.:	Issue: 1 Dated : 11/13/12

Vendor: The Clean Air Group - Croll Reynolds Company (CRC)

Data Sheets **HTF EXPANSION VESSEL VENT SCRUBBERS** **A-MV-209, B-MV-209** **PERFORMANCE**	**ABENER / TEYMA REQUIREMENT**		**CRC INFORMATION**	
	Inlet	**Outlet**	**Inlet**	**Outlet**
Maximum Concentration at Normal Flowrate	**Design**	**Design**	**Design**	**Design**
Total Gas Flow Rate, lb/hr	5,111	4,871	**5,111**	**4,955**
Gas Flow, scfm:	1,069	1,029	**1,069**	**1,029**
Gas Flow, acfm:	108	104	**118**	**107**
Operating Temperature, °F:	120	120	**120**	**119.9**
Operating Pressure, psig:	157	156	**157**	**156**
Gas Enthalpy, Btu/lb	22.03	11.04	**22.03**	**11.04**
Gas Flow Composition:				
HTF, lb/hr	0.31	0.41	**0.31**	**0.46**
Benzene, lb/hr	137.20	22.20	**137.20**	**23.60**
Toluene, lb/hr	4.54	0.83	**4.54**	**0.99**
Phenol, lb/hr	0.60	0.20	**0.60**	**0.53**
Nitrogen, lb/hr	4,969	4,848	**4,969**	**4,929.69**
High Boilers, lb/hr	0.01	0.02	**0.01**	**0.05**
Total Low Boilers, lb/hr	142.34	23.23	**142.34**	**25.12**
Total Non-N_2, lb/hr	142.66	23.65	**142.66**	**25.31**
HTF Liquid Flow Rate, lb/hr	45,000	45,240	**45,000**	**45,157**
HTF Liquid Flow, GPM:	87.3	88.1	**87.3**	**87.8**
HTF Liquid Temperature, °F:	120	120	**120**	**121**
HTF Liquid Pressure, psig:	159	156	**159**	**156**
HTF Liquid Enthalpy, Btu/lb:	-156	-188	**-156**	**-188**
HTF / Liquid Flow Composition:				
HTF, lb/hr	39,601	39,601	**39,601**	**39,601**
Benzene, lb/hr	1,070	1,185	**1,070**	**1,183.6**
Toluene, lb/hr	125	129	**125**	**128.55**
Phenol, lb/hr	1,143	1,143	**1,143**	**1143.07**
Nitrogen, lb/hr	10	131	**10**	**49.37**
High Boilers, lb/hr	3,052	3,052	**3,052**	**3,051.96**
Total Low Boilers, lb/hr	2,337	2,456	**2,337**	**2,455.26**
Total Non-N_2, lb/hr	44,990	45,109	**44,990**	**45,108**

1	11/13/12	Issued For Purchase	SMR	MZA	APF	
0	10/21/11	Issued For Quotes	WMP	MZA	APF	TS
No.	Date	Description	By	Chk'd	App'd	App'd

Information and know-how hereon are confidential and proprietary property of Abener Teyma Mojave General Partnership and may not be used, reproduced, or revealed to others except in accordance with the terms of a contract with or other written permission of Abener Teyma Mojave General Partnership.

Specification For HTF Expansion Vessels	Job No.: 120010	Spec. No.: 6007-ESP-ATP-58-62-V200
	Item No.: See Spec	No. 8
	Project: Mojave	
	Ref.:	Issue: 2 Dated : 6-March-12

Instructions:

1. Initialing (By/Chk'd/App'd) required on cover sheet only. All other title block information must be included on all pages.

2. Revisions are identified in the body of the Specification.

Rev. No.	Date	By	Chk'd	App'd	Description of Revision Including Page Numbers
0	9 Sept 11	JOA	HED/MZA	TS/APF	For Bid
1	11 Oct 11	HED	MZA	TS/APF	Addition 6007-ESP-ATP-58-62-V200D (pages: 3, 6, 15)
2	**06 March 12**	**RGTD**	**MZA**	**APF**	**General revision. Pages 3, 4, 5, 6, 8, 9, 10, 12, 14, 18, 21, 22**

2	06-Mar-2012	General revision	RGTD	MZA	APF	
1	11-Oct-2011	Addition 6007-ESP-ATP-58-62-V200D (pages: 3, 6, 15)	HED	MZA	TS	APF
0	9-Sept-2011	For Bid	JAO	HED/ MZA	TS	APF
No.	Date	Description	By	Chk'd	App'd	App'd

Information and know-how hereon are confidential and proprietary property of Abener Teyma Mojave General Partnership and may not be used, reproduced, or revealed to others except in accordance with the terms of a contract with or other written permission of Abener Teyma Mojave General Partnership.

Specification For HTF Expansion Vessels	Job No.: 120010	Spec. No.: 6007-ESP-ATP-58-62-V200
	Item No.: See Spec	No. 8
	Project: Mojave	
	Ref.:	Issue: 2 Dated : 6-March-12

1. Project description

A new 280 MW solar power plant will be constructed at a "greenfield" site near Hinkley, California. Heat transfer fluid (HTF) will be circulated, transferring heat energy from the solar collection fields to the power generation system.

2. General

2.1 This specification covers the minimum requirements for furnishing drawings, design, all materials, equipment, tools, accessories, labor and supervision, necessary for fabrication, assembly, testing, inspections, and shipping of process pressure vessels, as specified herein.

2.2 Definitions: Vendor means "Vessel Design and Fabrication Vendor" for which this specification is intended. Purchaser shall mean "Abener Teyma Mojave General Partnership". Owner shall mean "Mojave Solar LLC".

2.3 The attachments identified are part of this specification. All specifications and attachments shall be met and followed by the Vendor in full.

3. Function

The HTF Expansion Vessels allow for the change in volume of the HTF due to the thermal expansion and contraction of the fluid. The vessels are pressurized with nitrogen to provide sufficient pressure throughout the HTF recirculation loop to both blanket the stored HTF and prevent the HTF from vaporizing/flashing.

4. Operation

The vessels will be filled and emptied daily. The vessels will experience pressure and temperature cycles daily. The vessels and all associated components shall be designed to operate continuously, year round.

5. Location

The vessels will be located outdoors. The equipment shall meet all the design conditions including the seismic and climatic conditions in this specification. See attached specification 6007-ESP-ATP-00-60-G100 Project Design Criteria for site specific information.

2	06-Mar-2012	General revision	RGTD	MZA	APF	
1	11-Oct-2011	Addition 6007-ESP-ATP-58-62-V200D (pages: 3, 6, 15)	HED	MZA	TS	APF
0	9-Sept-2011	For Bid	JAO	HED/ MZA	TS	APF
No.	Date	Description	By	Chk'd	App'd	App'd

Information and know-how hereon are confidential and proprietary property of Abener Teyma Mojave General Partnership and may not be used, reproduced, or revealed to others except in accordance with the terms of a contract with or other written permission of Abener Teyma Mojave General Partnership.

6. Scope

6.1 Vendor shall furnish four (4) vessels per Alpha Plant and four (4) vessels per Beta Plant, refer to 6007-ESP-ATP-58-62-V200D, HTF Expansion Vessels data sheets, attached to this package.

6.2 Vendor shall furnish all the vessels complete as shown on data sheets and as noted herein and shall included all necessary blind flanges, studs, nuts, bolts, clips, lifting lugs, davits, and gaskets.

6.3 All vessels, with physical dimensions within the allowable limits for shipping, shall be completely shop fabricated and tested before shipment. **Tests shall include, but not limited to, 100% radiographed welds, fully heat treated for stress relieving and test pressure.**

6.4 Shop fabricated vessels shall include lifting lugs and tailing lugs, designed by vendor to include the weight of the insulation and jacket, for use in loading, unloading, and field erection of vessel. Empty weight shall be marked on the vessel by using lettering no less than 6 inches high. **Vendor shall include 2 nameplates (one in the tank and one in the skirt) placed at a visible height indicating the following: Item tag number, design code, fabricated by, fabrication number and date, final client name, fluid inside, erection weight and capacity, design pressure and temperature, test pressure and periodic test pressure, inspect stamp, stress relieving, percentage of welds radiographed and purchase order or contract number. The nameplate placed in the tank shall be welded to a bracket which is welded to the tank with a projection of 8 inches (insulation thickness), the nameplate itself will be a 8x10" plate with a thickness of 3/25 inches in stainless steel. The nameplate placed in the skirt shall be welded to the skirt prior to painting.**

6.5 **All welds in the tanks shall be 100% radiographed and fully heat treated for stress relieve.**

6.6 Anchor bolt size and quantity shall be as specified by Vendor. Vendor shall provide anchor bolt **material,** drawings and loading diagrams for foundation design. **Anchor bolts shall be in galvanized steel and shall be provided by Vendor.**

6.7 Vendor shall provide support skirt for vertical vessels. Support geometry shall be coordinated with the Abener Teyma to allow for pipe routing and skirt access. **All internal supports (if needed) for the skirt itself shall also be provided by Vendor. The internal supports shall be placed to allow access and insulation of the tank bottom.**

6.8 Vendor shall include piping from bottom nozzle to skirt perimeter. End of pipe shall extend minimum 6 inches past outside surface of skirt. Skirt openings for piping shall have a 1/2 in. minimum clearance between the pipe OD, including insulation, and the skirt. **All other piping**

Information and know-how hereon are confidential and proprietary property of Abener Teyma Mojave General Partnership and may not be used, reproduced, or revealed to others except in accordance with the terms of a contract with or other written permission of Abener Teyma Mojave General Partnership.

connections shall have, as minimum, a projection of 10 inches, to assure that the piping will protrude out of the 8 inches insulation.

6.9 **Vendor shall provide supports to the piping from bottom nozzle to allow piping growth through the skirt perimeter as is shown in the data sheet 6007-ESP-ATP-58-62-V200D.**

6.10 A single skirt access manway, of 24 in. diameter, shall be provided in each skirt Bottom of access opening shall be 18 inches above skirt base. No piping shall pass through access openings. **Access shall be a 24 in pipe opening. Vendor shall provide adequate top handle inside the skirt and appropriate ladder rungs**.

6.11 **Vendor shall provide a single 24 in manway placed in the tank shell, near to the bottom tangent. Access opening shall have a flanged cover with davit. Vendor shall provide adequate top handle inside the shell and appropriate ladder rungs. Vendor shall also provide exterior ladder and platform to assure a safety access to the manway.**

6.12 At least six vents shall be provided in skirt. The vents shall be minimum NPS 6, Schedule 80 and shall be equally spaced at a maximum of 6 ft around the skirt circumference. **Vents shall be fully open access**.

6.13 Each vessel shall include four stainless steel grounding lugs. Grounding lugs shall be a minimum of 3" wide x 3" tall x ½" thick plate, and shall be made of 304 grade stainless steel. The grounding lugs shall be drilled to match "Burndy Qiklug" type "QA28-2N" which utilizes NEMA bolt spacing. Grounding lugs shall be welded to the skirt 12" above the base foundation flange.

6.14 Each vessel shall include insulation support rings. For each vessel, their shall be 7 rings, each extending 5 inches beyond the shell circumference , evenly spaced at maximum 9 feet, starting near the bottom tangent. Spacing should be in 3 foot increments. Top ring should be near the top tangent. Rings can be segmented and detachable for shipment. Any attachment brackets shall be continuously welded to the vessel.

6.15 **Vessels shall be designed for 200 PSIG and full vacuum. Vendor shall provide vacuum rings. Vacuum rings shall be also used as an insulation support ring, however, an insulation support ring shall not be used as a vacuum ring.**

6.16 Each vessel shall include insulation support pins welded to the heads. Pins are to be #10 ga. (3.6mm) weld pins on 12" centers. The companion 2-1/2" square speed clips shall be shipped with the vessel. The pins shall be carbon steel **and shall be length compatible with the insulation thickness of 8"**.

2	06-Mar-2012	General revision	RGTD	MZA	APF	
1	11-Oct-2011	Addition 6007-ESP-ATP-58-62-V200D (pages: 3, 6, 15)	HED	MZA	TS	APF
0	9-Sept-2011	For Bid	JAO	HED/ MZA	TS	APF
No.	Date	Description	By	Chk'd	App'd	App'd

Information and know-how hereon are confidential and proprietary property of Abener Teyma Mojave General Partnership and may not be used, reproduced, or revealed to others except in accordance with the terms of a contract with or other written permission of Abener Teyma Mojave General Partnership.

6.17 **Each vessel shall include four welded reinforcing pads 12" x 12" on the vessel top head for attachment or pipe supports. Pads and clips shall be designed and reinforced to accommodate the following combined loads:**

6.17.1 **Downward Load: 10,000 lb.**

6.17.2 **Bending Moment (+/- radial to center of vessel): 100,000 ft*lb.**

6.17.3 **Bending Moment (+/- tangential): 100,000 ft*lb.**

6.18 **Vendor shall provide reinforcing pads and clips to support vertical piping attached to the vessel shell.**

6.19 **Vendor shall provide a vortex breaker for the connection located at the bottom of the HTF expansion vessels.**

6.20 Vendor shall provide a foundation template that matches the anchor bolt pattern on vessel skirt. Template shall be sturdy steel construction. Template can be either one piece or multi piece bolted construction. For multi piece bolted assembly, the sections should include a pin and hole arrangement to assure proper alignment and tolerances. One template will be re-used for each of the vessel foundations. Template shall be delivered to job site within 6 weeks of anchor bolt arrangement approval.

6.21 For the HTF Expansion Vessels, refer to data sheets within this specification. For the HTF Flash Expansion Vessels, refer to data sheets within this specification. **Vendor should complete the data sheet at the end of this specification and submit it with the proposal.**

6.22 Each Flash Expansion Vessel shall include an internal stand pipe. The stand pipe shall be fully welded to the inside of the bottom head. The stand pipe shall be designed to retain the static head if full of HTF with zero level of HTF outside the stand pipe. The stand pipe shall be designed to retain the static head if full of HTF outside the stand pipe and zero level of HTF inside the stand pipe. The stand pipe shall be designed to resist seismic loading when full of HTF with zero level of HTF outside of the stand pipe. The stand pipe shall include 2 times the corrosion allowance as specified on the data sheet. The stand pipe shall be provided with four (4) ½" diameter holes located 6" above the bottom of the stand pipe. These holes are for static leveling between the vessel and stand pipe. The stand pipe shall be provided with one (1) ½" diameter hole located at the bottom of the stand pipe next to the vessel head, to allow for complete drainage of the vessel. **See 6007-HDD-ATP-58-62-C103 Data sheet for Therminol VP-1 for the HTF properties.**

Information and know-how hereon are confidential and proprietary property of Abener Teyma Mojave General Partnership and may not be used, reproduced, or revealed to others except in accordance with the terms of a contract with or other written permission of Abener Teyma Mojave General Partnership.

6.23 Each Flash Expansion Vessel shall be provided with an internal spray shield. The spray shield is to prevent extreme thermal gradients in the shell where the HTF in the vessel is warmer than the HTF cooling spray injected into the vessel. The spray shield shall have an OD 4" smaller than the ID of the vessel. The spray shield shall be permanently attached to the top head via welding. The attachments shall be clips that allow open space (minimum 2" gap) between the top head and the spray shield. A 2" gap between the spray shield and vessel is to be maintained. The open space is to allow vapor to escape when the liquid level exceeds the bottom of the spray shield. The spray shield shall be a minimum of 5/16" thick.

6.24 On the Flash Expansion Vessel, the manway cover shall be provided with a nozzle pipe welded through the center of the cover. This pipe shall have prepped weld ends inside and outside the vessel. The pipe shall extend 6" either side of the manway cover. Vendor shall weld a spray head to the inside end of the nozzle pipe **and shall provide it according the following:**

6.24.1 **Supplier: BETE.**

6.24.2 **Model: TC1480W.**

6.24.3 **Material: 316 stainless steel.**

6.24.4 **Characteristics: 8 inches, schedule 40, operating flow = 1,370,000 lb/h, BW, maximum recommended differential pressure = 60 PSI, design temperature = 750 ºF.**

6.25 On nozzles with weld end prep, the thicker nozzle on the vessel will need to be taper bored by the vendor to match the mating field pipe inside diameter.

7. Codes and standards

7.1 The requirements of ASME Sec VIII Division 1 are to be fully adhered to by Vendor for the complete project. "Code" as referenced herein, shall mean ASME Sec VIII Division 1, unless indicated otherwise.

7.2 The building codes for the site are those approved by San Bernardino County, California, and the California Energy Commission, and include their local amendments and additions to the following:

7.2.1 CBC – California Building Standards Code – Title 24, California Code of Regulations

7.2.2 IMC – International Mechanical Code - 2006

2	06-Mar-2012	General revision	RGTD	MZA	APF	
1	11-Oct-2011	Addition 6007-ESP-ATP-58-62-V200D (pages: 3, 6, 15)	HED	MZA	TS	APF
0	9-Sept-2011	For Bid	JAO	HED/ MZA	TS	APF
No.	Date	Description	By	Chk'd	App'd	App'd

Information and know-how hereon are confidential and proprietary property of Abener Teyma Mojave General Partnership and may not be used, reproduced, or revealed to others except in accordance with the terms of a contract with or other written permission of Abener Teyma Mojave General Partnership.

7.3 The following codes, standards, regulations, and guides are to be referred to by Vendor as guidelines for this project. As deemed appropriate by the Vendor, additional codes and regulations not mentioned below shall be followed based on prudent design practice.

7.3.1 AISC – American Institute for Steel Construction

7.3.2 AISI – American Iron and Steel Institute

7.3.3 ANSI – American National Standards Institute

7.3.4 ASME – American Society of Mechanical Engineers

7.3.5 ASNT – American Society for Nondestructive Testing

7.3.6 ASTM – American Society for Testing and Materials

7.3.7 AWS – American Welding Society

7.3.8 IBC - International Building Code 2006

7.3.9 ISO - International Standardization Organization

7.3.10 NFPA – National Fire Protection Agency

7.3.11 SSPC – Society for Protective Coatings

7.3.12 Occupational Safety and Health Administration Federal laws, statutes, regulations, ordinances and inspections.

7.3.13 Codes, laws, statutes, and regulations, ordinances and inspections, for the State, County, and Local Governments.

7.4 Should there be any conflict between applicable codes, standards of practice, specifications, or vendor's recommendations noted herein and those of the locality of the project, the more stringent code shall apply.

8. Engineering & Design

8.1 Vendor shall provide all engineering services required to fulfill the obligations of this contract.

8.2 Vendor shall provide engineering drawings and calculations for approval prior to the start of fabrication.

8.2.1 Refer to and comply with specification 6007-ESP-ATP-58-62-V200V, Vendor Data Requirements Heat Transfer Fluid Expansion Vessels, attached to this package.

Information and know-how hereon are confidential and proprietary property of Abener Teyma Mojave General Partnership and may not be used, reproduced, or revealed to others except in accordance with the terms of a contract with or other written permission of Abener Teyma Mojave General Partnership.

8.2.2 Approval of Vendor's drawings and calculations is limited to verifying general compliance with specifications and design drawings, and does not imply verification of dimensions, quantities, or calculations. Vendor is not relieved from responsibility for accurate dimensioning, equipment sizing, fabrication to required tolerances, and fabrication fit-up.

8.2.3 Engineering units indicated shall be U.S. customary. Volumes shall be indicated in gallons.

8.2.4 Drawings:

8.2.4.1 A general arrangement drawing shall be furnished for each vessel, and shall contain the data shown in 6007-ESP-ATP-58-62-V200D. The location of the vessel marking or nameplate, the size and orientation of all nozzles and connections, and the anchor bolt layout shall also be shown on this drawing. **Drawing shall include the insulation thickness (supplied by others) in order to show the appropriate projection of the nozzles.**

8.2.4.2 A separate outline drawing for each vessel shall be furnished with appropriate markings to cross-reference each component (shell plates, heads, nozzles, flanges, forgings, skirt plates, etc.) to the applicable mill test certificates for the steels used in the construction.

8.2.4.3 Vendor shall provide all drawings that are issued for fabrication, sealed by a licensed Professional Engineer who is legally authorized to practice in the State of California.

8.2.4.4 Fabrication drawings shall show weld details and shall reference applicable welding procedures. The drawings shall also include impact test requirements, showing (as applicable):

8.2.4.4.1 Component

8.2.4.4.2 Thickness for impact purposes

8.2.4.4.3 Material specification

8.2.4.4.4 Critical Exposure Temperature

8.2.4.4.5 Minimum Design Metal Temperature

8.2.4.4.6 Appropriate Charpy impact requirements (average/minimum values)

Information and know-how hereon are confidential and proprietary property of Abener Teyma Mojave General Partnership and may not be used, reproduced, or revealed to others except in accordance with the terms of a contract with or other written permission of Abener Teyma Mojave General Partnership.

8.2.5 Data and Calculations

8.2.5.1 Design calculations (including lifting attachments and supports) made by the Vendor shall be furnished prior to or along with submission of drawings for approval. When calculations are made using a computer, all input data, assumptions, computer program version used, and a summary of the results shall be furnished.

8.2.5.2 Vendor shall provide their structural calculation package, sealed by a licensed Professional Engineer who is legally authorized to practice in the State of California.

8.3 Vessels shall be designed for a minimum 30 year life.

8.4 Vessels shall be designed to withstand internal or external pressure and mechanical loads induced by vessel dead load, process, contents, earthquake, wind and other specified loadings. Wind and earthquake loads shall be in accordance with the Project Design Criteria described in Specification 6007-ESP-ATP-00-62-G100. Load combinations must be appropriately considered. Record design calculations are required.

8.5 The minimum insulation design load shall be for **8**" thickness on heads and shell using 8 lb / ft^3 mineral wool insulation with aluminum jacket.

8.6 Materials of construction shall be per this specification and the attached data sheet. In the event of conflict between parts of this specification and the attached data sheet, the vessel data sheet shall govern the requirements. Where materials of construction are not specified, Vendor shall propose materials for each item as appropriate for the service conditions.

8.7 All materials purchased by Vendor shall meet nationally recognized standards unless otherwise approved by Abener Teyma.

8.8 All materials shall be compatible with the vessel contents and in accordance with all applicable welding procedures.

8.9 Copies of mill test reports for materials shall be provided to Abener Teyma by Vendor.

8.10 The design shall be such to avoid any corrosion of vessel equipment.

8.11 The design shall be such to avoid any contamination of the vessel contents once the vessel is put into service.

8.12 The layout of weld seams shall be such that it will allow full access for inspection. Circumferential seams shall not be located within a distance of 1-1/2" of any external

Information and know-how hereon are confidential and proprietary property of Abener Teyma Mojave General Partnership and may not be used, reproduced, or revealed to others except in accordance with the terms of a contract with or other written permission of Abener Teyma Mojave General Partnership.

compression ring, internal ring, support ring, etc. Nozzles and manholes shall not intersect any weld seams, unless approved by Abener Teyma.

8.13 All manway covers shall be equipped with davits.

8.14 Vendor shall provide corrosion allowances as specified by the data sheets.

8.15 The minimum required thickness of plate and other structural members shall be that which is necessary to satisfy tension and compression strength requirements for the specified design conditions, without inclusion of corrosion allowance.

8.16 All nozzles shall be flush with the inside surface of the vessel wall, unless otherwise specified.

8.17 Nozzle flanges and manway flanges shall be the material as indicated on the Data Sheet.

8.18 Internal bolting is not allowed.

8.19 Nozzles shall not be located in vessel plate weld seams, unless prior approval has been given by Abener Teyma.

8.20 Vessel shall be designed for daily cyclic operation, 450 cycles per year, 30 year life cycle.

8.20.1 Vendor shall include Cyclic Analysis in their design. Vendor shall provide Cyclic Analysis calculations with other design calculations for Abener Teyma approval.

8.20.2 Cyclic operating conditions are**:** Daily cycle of filling from low level at bottom tangent point (118 psig at 392°F) to level at 90% of straight side height (177 psig at 560°F), and back to low level (118 psig at 392°F) .

8.21 Vessel design shall also be capable of a liquid level at the top tangent line operating with HTF at 100°F with nitrogen blanket at 15 psig.

8.22 Vendor to indicate on project drawings the maximum allowable loads on nozzles. **Nozzles shall be designed for a minimum of the loads as indicated for the CL300 in the specification 6007-ESP-ATP-00-G130 and showed bellow:**

	Force (pounds)		Moments (foot pounds)	
Nozzle Size (NPS)	**Sum**	**Force**	**Sum**	**Force**
3 and smaller	**750**	**428**	**1500**	**855**
4	**1400**	**800**	**2500**	**1425**
6	**2000**	**1140**	**6000**	**3425**
8	**2800**	**1600**	**12000**	**6850**
10	**3700**	**1850**	**16000**	**9120**
12	**4600**	**2625**	**25000**	**14250**

2	06-Mar-2012	General revision	RGTD	MZA	APF	
1	11-Oct-2011	Addition 6007-ESP-ATP-58-62-V200D (pages: 3, 6, 15)	HED	MZA	TS	APF
0	9-Sept-2011	For Bid	JAO	HED/ MZA	TS	APF
No.	Date	Description	By	Chk'd	App'd	App'd

Information and know-how hereon are confidential and proprietary property of Abener Teyma Mojave General Partnership and may not be used, reproduced, or revealed to others except in accordance with the terms of a contract with or other written permission of Abener Teyma Mojave General Partnership.

36	15,000	8,660	120,000	70,000
42	15,000	8,660	120,000	70,000

Example: NPS-3 nozzle would be subjected to simultaneous loads of F_{axial}= 428. lbs, F_{radial}= 428. lbs, $F_{circumferential}$= 428. lbs, and M_{axial}= 855. ft-lbs, $M_{circumferential}$= 855. ft-lbs, M_{radial}= 855. ft-lbs

9. Fabrication

9.1 Any fabrication shall not be sublet to others without the written approval of Abener Teyma.

9.2 All vessels must meet the latest edition of the code indicated on the data sheets for shop practices, welding, stress relieving, radiographing, and testing.

9.3 All plate and other material used in the execution of this work shall be new and clean stock, free from surface laminations and other physical imperfections.

9.4 All materials shall be identified throughout fabrication. Material certification shall be provided on request by the Abener Teyma inspector. Material certification test reports shall become a permanent record of the documentation package.

9.5 Machines surfaces which are warped or distorted due to welding, etc., shall be re-machined after these operations are finished, with minimum thickness maintained as specified. Machine surfaces shall be finished to the smoothness limit indicated on the design drawings.

9.6 The axes of any shell nozzle shall be radial and perpendicular to the longitudinal axis of the vessel. Flange face shall be perpendicular to the nozzle axis. All welds protruding beyond the flange face shall be ground flush.

9.7 Flange bolt holes of shell nozzles shall straddle the axial center line.

9.8 Vendor shall prepare the weld end nozzles end face in accordance with ASME B31.3 and ASME B16.25, to match the piping as indicated in the piping specification referenced in this specification. Abener Teyma shall review each weld end nozzle face prior to purging and protection for shipment. Vendor is to protect each weld end nozzle face against damage during handling and transporting.

9.9 All permanent attachments, stiffeners, clip angles, ring angles, etc., shall be joined to vessels by continuous welding, unless approved otherwise by Abener Teyma.

Information and know-how hereon are confidential and proprietary property of Abener Teyma Mojave General Partnership and may not be used, reproduced, or revealed to others except in accordance with the terms of a contract with or other written permission of Abener Teyma Mojave General Partnership.

9.10 Remove all sharp edges and burrs.

9.11 All welds and surfaces exposed to vessel contents, its vapor or condensate shall be free of gouges, pits, cracks or other surface defects.

9.12 All welds and materials discovered to be non-compliant through inspection and/or testing shall be fully repaired at vendor's cost.

9.13 Fabricated location and orientation of nozzles will be reviewed by Abener Teyma. If there are any discrepancies with project documents, the Vendor will make corrections.

9.14 Vendor shall notify Abener Teyma regarding any necessary repair work and have written approval before proceeding.

9.15 Vendor shall provide whatever additional treatment, such as preheat and/or post weld heating, as required for the material being used. Shop drawings must identify such treatments.

9.15.1 For any required heat treatment, Vendor shall provide written procedures for Abener Teyma review.

9.15.2 At completion, Vendor shall provide a Product Certification for PWHT, including a copy of time / temperature chart records.

9.16 To prevent contamination of the vessel contents, Vendor shall mechanically clean the interior surface of the vessel to remove all weld spatter, scale, rust, filings, dirt, etc., as well as all foreign materials.

9.16.1 Mechanical cleaning shall meet all requirements of NACE No. 3 (Commercial Blast Cleaning).

9.16.2 Vendor shall not commence mechanical cleaning until after all testing has been completed.

9.16.3 Vendor shall not commence mechanical cleaning until instructed by Abener Teyma to do so.

9.16.4 At the completion of mechanical cleaning, Vendor shall purge and seal the vessel with an inert gas.

9.16.4.1 Warning signs shall be placed by Vendor on the vessel and manway clearly indicating the vessel has an inert gas seal that must be purged before entry.

9.16.4.2 Warning signs shall be placed by Vendor on the vessel and manway clearly indicating the vessel has storage desiccant inside that must be removed

Information and know-how hereon are confidential and proprietary property of Abener Teyma Mojave General Partnership and may not be used, reproduced, or revealed to others except in accordance with the terms of a contract with or other written permission of Abener Teyma Mojave General Partnership.

prior to start-up. **The desiccant should be placed in a hook under the manway cover to make the desiccant removal easier.**

9.16.4.3 An acceptable method for sealing weld end nozzles is with a flat plate welded to pipe end, in a manner that will minimize any damage to the weld end prep. We want to minimize any weld end prep required at the job site.

9.16.4.4 Sealing with inert gas shall include a pressure gauge that proves purge gas in the vessel. Pressure gauge is to stay with sealed vessel. Pressure gauge is to be protected from damage during shipment. Pressure gauge is to include shut off valve.

10. Tolerances

10.1 The vendor shall choose the more stringent between Code requirement and the following. For nozzle elevations and positions, the tolerance shall be as measured from the bottom tangent line or datum, and not accumulated by multiple dimensioning possibly shown on the design drawings.

11. Inspection and testing

11.1 Abener Teyma (or an inspector on their behalf) reserves the right to inspect the equipment at any time during the course of fabrication. Abener Teyma retains the right to provide personnel to observe all fabrication work within the scope of the contracted work (including testing and inspection). Such individuals shall be afforded full and free access for these purposes, subject to safety and schedule constraints.

11.2 Inspector means Abener Teyma (or an inspector on their behalf).

11.3 Inspector shall have free access, at all reasonable times, to the areas where the work on equipment is being performed. Vendor shall notify Abener Teyma purchasing department in advance (minimum one week) of scheduled vessel testing to allow time for the Inspector to arrange to be at the test site before testing begins.

11.4 Mill and shop inspection shall not release the Vendor from responsibility for replacing any defective material and for repairing any defective workmanship that may be discovered in the field

Information and know-how hereon are confidential and proprietary property of Abener Teyma Mojave General Partnership and may not be used, reproduced, or revealed to others except in accordance with the terms of a contract with or other written permission of Abener Teyma Mojave General Partnership.

11.5 Vendor's currently qualified welders and procedures under ASME Sec. IX, must be submitted to Inspector for approval. Additional qualifications necessary are to be at vendor's expense.

11.6 All vessels shall be inspected and tested according to the applicable code as listed in the vessel data sheets.

11.7 For any required radiographic examination, a certified copy of a written report confirming that the work was inspected as set forth herein shall be provided when specified. Refer to 6007-ESP-ATP-58-62-V200V Contractor Data Requirements. The report shall include the following:

11.7.1 A summary of inspection of radiographs.

11.7.2 Identification of unacceptable radiographs and a statement of the action taken to rectify unsatisfactory welds

11.8 Tell-tale holes shall be used to pneumatically test all welded attachments prior to hydrostatic testing. Tell-tale holes shall not be plugged during hydrostatic testing of the vessel.

11.9 Vendor shall submit letters of completion to Abener Teyma at least twenty days prior to the requested final inspection date. The equipment must be ready for inspection and the tests run prior to this final inspection request.

11.10 The cost of all tests due to code requirements or manufacturer's test requirements shall be fully borne by vendor.

11.11 A written certification of an acceptable hydrostatic test shall be completed by vendor. The certification shall be forwarded to the individual indicated on the Abener Teyma purchase order.

12. Paint

12.1 Vendor shall **sand blast clean all the surfaces and** prime coat (finish) the vessel skirt as follows:

12.1.1 The vessel skirt shall be shop prime coated, exterior and interior, in accordance with specification 6007-ESP-ATP-00-60-N102, Paint System for High Temp. Non-primed Steel.

12.1.2 All shop priming and painting shall be in accordance with specification 6007-ESP-ATP-00-60-N180 "Shop Applied Painting".

12.1.3 No paint shall be applied until after all tests and examinations have been completed.

12.1.4 Flange faces and other machined areas shall not be painted unless specifically designated.

2	06-Mar-2012	General revision	RGTD	MZA	APF	
1	11-Oct-2011	Addition 6007-ESP-ATP-58-62-V200D (pages: 3, 6, 15)	HED	MZA	TS	APF
0	9-Sept-2011	For Bid	JAO	HED/ MZA	TS	APF
No.	Date	Description	By	Chk'd	App'd	App'd

Information and know-how hereon are confidential and proprietary property of Abener Teyma Mojave General Partnership and may not be used, reproduced, or revealed to others except in accordance with the terms of a contract with or other written permission of Abener Teyma Mojave General Partnership.

12.1.5 **Davit arms and manways shall be shop painted (finish)**.

12.2 **Vendor shall sand blast and prime coat the exterior of the vessels to avoid corrosion in the field while insulation is installed.**

12.3 **After cleaning and sand blasting the interior of the tanks, Vendor shall apply a corrosion inhibitor (Chempro Ferroxichem or equivalent).**

13. Installation information

13.1 Vendor shall separately quote one set of any special tools and wrenches required for installation and maintenance.

13.2 Supply all spare parts necessary for system assembly, testing, start-up, and commissioning. Vendor shall provide Abener Teyma a list of suggested spare parts within 1 month after project award. Vendor shall supply one spare set of gaskets for each manyway; tagged with the item number and purchase order number.

14. Shipping

All parts shall be skidded, boxed, or otherwise suitably prepared for shipment to protect against damage while in transit per specification 6007-ESP-ATP-00-60-G121.

15. Additional requirements

15.1 A permanent stainless steel nameplate with standoff shall be fixed to the equipment that includes the information as indicated in ASME Code for the marking of nameplates. Dimensions are to be indicated in feet and inches. Volumes are to be indicated in gallons.

15.2 In addition to the ASME requirements a permanent stainless steel nameplate with standoff shall be fixed to all pressure vessels including, but is not limited to, the following information:

15.2.1 Customers Equipment Number

15.2.2 Customers Equipment Name

15.2.3 Customers PO number

15.2.4 Nominal Diameter

2	06-Mar-2012	General revision	RGTD	MZA	APF	
1	11-Oct-2011	Addition 6007-ESP-ATP-58-62-V200D (pages: 3, 6, 15)	HED	MZA	TS	APF
0	9-Sept-2011	For Bid	JAO	HED/ MZA	TS	APF
No.	Date	Description	By	Chk'd	App'd	App'd

Information and know-how hereon are confidential and proprietary property of Abener Teyma Mojave General Partnership and may not be used, reproduced, or revealed to others except in accordance with the terms of a contract with or other written permission of Abener Teyma Mojave General Partnership.

15.2.5 Nominal Overall Height

15.2.6 Empty Weight

15.2.7 Internal Capacity

15.2.8 Design Specific Gravity

15.2.9 Material of Construction

Information and know-how hereon are confidential and proprietary property of Abener Teyma Mojave General Partnership and may not be used, reproduced, or revealed to others except in accordance with the terms of a contract with or other written permission of Abener Teyma Mojave General Partnership.

15.3 Data

15.3.1 A Manufacturer's data report shall be furnished and shall contain the same information as required by form U-1 of ASME SEC VIII D1. Certified material test reports shall be furnished, and they shall represent the properties in the as fabricated condition. The data report shall be signed by the Vendor, by an Authorized Inspector as defined in Par. UG-91 of the ASME Code, or as otherwise required by the applicable code. Signed copies of data reports and other required documentation shall be submitted to Abener Teyma prior to shipment of each vessel.

15.3.2 Welding, PWHT, and weld repair procedures shall be submitted to Abener Teyma for review prior to the start of fabrication.

15.3.3 Upon completion of fabrication, the Vendor shall supply Abener Teyma with:

15.3.3.1 Copy of PWHT recording (if applicable)

15.3.3.2 Copy of hydrostatic test chart

15.3.3.3 Copy of NDE (RT, UT, MT, PT, WFMT, etc.) test records

16. Vendor proposal data

16.1 Vendor shall include with their proposal the data sheets found at the end of this specification, completed with all the information.

16.2 Vendor shall complete the Vendor Commitment column of 6007-ESP-ATP-58-62-V200V and submit with the proposal. Failure to submit these data sheets will result in an incomplete proposal that may not be considered.

17. Exceptions

17.1 Comments and exceptions to the specification shall be listed in a separate part of the proposal title "Exceptions to the Specification". All Exceptions shall be listed in this section and shall reference the appropriate specification section. No other exceptions will be allowed.

18. Schedule

2	06-Mar-2012	General revision	RGTD	MZA	APF	
1	11-Oct-2011	Addition 6007-ESP-ATP-58-62-V200D (pages: 3, 6, 15)	HED	MZA	TS	APF
0	9-Sept-2011	For Bid	JAO	HED/ MZA	TS	APF
No.	Date	Description	By	Chk'd	App'd	App'd

Information and know-how hereon are confidential and proprietary property of Abener Teyma Mojave General Partnership and may not be used, reproduced, or revealed to others except in accordance with the terms of a contract with or other written permission of Abener Teyma Mojave General Partnership.

18.1 After issue of purchase order, Vendor shall provide a detailed schedule indicating dates for engineering, procurement, fabrication, testing, cleaning, painting, and shipping.

Information and know-how hereon are confidential and proprietary property of Abener Teyma Mojave General Partnership and may not be used, reproduced, or revealed to others except in accordance with the terms of a contract with or other written permission of Abener Teyma Mojave General Partnership.

Specification For HTF Expansion Vessels	Job No.: 120010	Spec. No.: 6007-ESP-ATP-58-62-V200
	Item No.: See Spec	No. 8
	Project: Mojave	
	Ref.:	Issue: 2 Dated : 6-March-12

19. Attachements

6007-ESP-ATP-58-62-V200D	HTF Expansion Vessels Data Sheets
6007-ESP-ATP-58-62-V200V	Vendor Data Requirements Heat Transfer Fluid Expansion Vessel
6007-ESP-ATP -00-62-G100	Project Design Criteria
6007-ESP-ATP -00-60-G120	Equipment Modeling Vendor Data Requirements
6007-ESP-ATP -00-60-G121	Shipping Preparation
6007-ESP-ATP-00-60-G130	Required Allowable Nozzle Loads
6007-ESP-ATP -68-61-CS30	Class 300 Carbon Steel – Piping System - HTF Return
6007-ESP-ATP-00-60-N102	Paint System for High Temp Non-primed Steel.
6007-ESP-ATP-00-60-N180	Shop Applied Painting
6007-HDD-ATP-58-62-C103	**Data sheet for Therminol VP-1**

2	06-Mar-2012	General revision	RGTD	MZA	APF	
1	11-Oct-2011	Addition 6007-ESP-ATP-58-62-V200D (pages: 3, 6, 15)	HED	MZA	TS	APF
0	9-Sept-2011	For Bid	JAO	HED/ MZA	TS	APF
No.	Date	Description	By	Chk'd	App'd	App'd

Information and know-how hereon are confidential and proprietary property of Abener Teyma Mojave General Partnership and may not be used, reproduced, or revealed to others except in accordance with the terms of a contract with or other written permission of Abener Teyma Mojave General Partnership.

Specification For HTF Expansion Vessels	Job No.: 120010	Spec. No.: 6007-ESP-ATP-58-62-V200
	Item No.: See Spec	No. 8
	Project: Mojave	
	Ref.:	Issue: 2 Dated : 6-March-12

Data Sheets with Proposal **VENDOR:**

Vendor data required with proposal.		
	Vessel MV-205 A,B,C	**Vessel MV-205 E**
Total Weight (empty) (lbs)		
Shell thickness (course 1)		
Shell thickness (course 1)		
Shell thickness (course 1)		
Shell thickness (course 1)		
Shell thickness (course 1)		
Shell thickness (course 1)		
Shell thickness (course 1)		
Head thickness (top)		
Head thickness (bottom)		
Skirt thickness		
Exceptions to Specification? (Y / N)		

2	06-Mar-2012	General revision	RGTD	MZA	APF	
1	11-Oct-2011	Addition 6007-ESP-ATP-58-62-V200D (pages: 3, 6, 15)	HED	MZA	TS	APF
0	9-Sept-2011	For Bid	JAO	HED/ MZA	TS	APF
No.	Date	Description	By	Chk'd	App'd	App'd

Information and know-how hereon are confidential and proprietary property of Abener Teyma Mojave General Partnership and may not be used, reproduced, or revealed to others except in accordance with the terms of a contract with or other written permission of Abener Teyma Mojave General Partnership.

Specification For HTF Expansion Vessels	Job No.: 120010	Spec. No.: 6007-ESP-ATP-58-62-V200
	Item No.: See Spec	No. 8
	Project: Mojave	
	Ref.:	Issue: 2 Dated : 6-March-12

Please, fill in the last column using the following:
Included = When the item specified is included in your base price
Optional = When the item is quoted like an option
Not Provided = When is not included in your base price and is not either quoted as an option.
Use the "notes" blank to include all the clarifications you need

Scope of work

Item	Abener	Vendor Name
Tank (bottom, shell and roof).	Required (8 tanks)	
Tank supports (skirt)	Required	
Manways, including davit arms, bolts, gasket, blind flange, ladder rungs and handle inside.	Required	
Nozzles with a projection of 10 inches	Required	
Equipment mounting flanges	Required	
Internals	Required	
Electrical grounding lugs (SS)	Required	
Studs, nuts, bolts, clips, lifting lugs	Required	
Nondestructive testing. 100% X-ray in welds.	Required	
Hydrostatic and pneumatic testing	Required	
Name plates	Required	
Anchor bolts (design and material)	Required	
Piping from bottom nozzle to skirt perimeter with supports	Required	
Open access to the skirt and vents	Required	
4 Grounding lugs (SS)	Required	
Vacuum rings	Required	
Insulation rings and insulation pins	Required	
4 welded reinforcing pads on top	Required	
Reinforcing pads and clips for vertical piping	Required	
Pipe clips for fire protection piping	Required	
Vortex breaker	Required	
Foundation template	Required	
Internal spray shield for the flash vessel	Required	
Internal stand pipe for the flash vessels	Required	
Internal nozzle pipe for the flash vessels	Required	
Tank sealing with inert gas and desiccant	Required	
Tank interior surface: blast clean and corrosion inhibitor	Required	

2	06-Mar-2012	General revision	RGTD	MZA	APF	
1	11-Oct-2011	Addition 6007-ESP-ATP-58-62-V200D (pages: 3, 6, 15)	HED	MZA	TS	APF
0	9-Sept-2011	For Bid	JAO	HED/ MZA	TS	APF
No.	Date	Description	By	Chk'd	App'd	App'd

Information and know-how hereon are confidential and proprietary property of Abener Teyma Mojave General Partnership and may not be used, reproduced, or revealed to others except in accordance with the terms of a contract with or other written permission of Abener Teyma Mojave General Partnership.

Specification For HTF Expansion Vessels	Job No.: 120010	Spec. No.: 6007-ESP-ATP-58-62-V200
	Item No.: See Spec	No. 8
	Project: Mojave	
	Ref.:	Issue: 2 Dated : 6-March-12

Item	Abener	Vendor name
Tank exterior surface: blast cleand and prime coat	Required	
Skirt, davits and manways: Shop painted (finish)	Required	
Access and platform to shell manway	Required	
Insulation rings and pins	Required	
Spares	2 gaskets per manway required	
Thermowells	Required	
PE stampping / Stampping	Required	
Final documentation (2 electronic copies and 10 paper copies)		
Others		
Notes:		

No.	Date	Description	By	Chk'd	App'd	App'd
2	06-Mar-2012	General revision	RGTD	MZA	APF	
1	11-Oct-2011	Addition 6007-ESP-ATP-58-62-V200D (pages: 3, 6, 15)	HED	MZA	TS	APF
0	9-Sept-2011	For Bid	JAO	HED/ MZA	TS	APF

Information and know-how hereon are confidential and proprietary property of Abener Teyma Mojave General Partnership and may not be used, reproduced, or revealed to others except in accordance with the terms of a contract with or other written permission of Abener Teyma Mojave General Partnership.

CONSTRUCTION

CODE: ASME SEC VII, DIV 1		STAMP: ASME	
PRESS.(PSIG)	MAX.OP. 174	MIN.OP. FV	DESIGN: 200/FV
TEMP. (°F)	MAX.OP. 680	MIN.OP. 100	DESIGN: 750
WIND VELOCITY: SEE SPEC. MPH		CORR.ALLOW: 0.0625" (1/16")	
SEISMIC ZONE: SEE SPEC.			
PHYS. & CHEM. TESTS: SEE SPEC.		STRESS RELIEVE: SEE SPEC.	

MATERIAL	SPEC	MATERIAL	SPEC
SHELL	SA-516-70	INTERNALS	VORTEX BREAKER
HEADS	SA-516-70	DAVIT/HINGE	YES, SEE SPEC
		PLATFORMS	YES, FOR THE MANWAY (A)
SKIRT	SA-516-70	LADDER (CAGED)	YES, FOR THE MANWAY (A)
		CLIPS AND PADS (PIPE SUPPORT)	YES, SEE SPEC
NOZZLES	CODE, SEE PIPE SPEC.	PAINTER TROLLEY	N/R
PIPE	CODE, SEE PIPE SPEC.	LIFTING LUGS	YES, SEE SPEC
COUPLINGS	N/R	PAINT	SKIRT AND TANK PRIMED
GASKETS	SEE PIPE SPEC	INSULATION	BY OTHERS, SEE SPEC, 8"
BOLTS	CODE	INSUL SUPPORTS, PINS	YES, SEE SPEC
NUTS	CODE	GUARDRAIL	YES, FOR THE MANWAY (A)

CONNECTION SCHEDULE

MK.	NR	SIZE	RATING	FACING	LOCATION	SERVICE	PROJ
A	1	24"	CODE	RF	BOT SHELL	MANWAY	10"
B	1	3"	CS32	WELD END	TOP	HTF MAIN PUMP ORIFICE	10"
C	1	3"	CS30	WELD END	TOP	N2 ULLAGE	10"
D	1	8"	CS30	WELD END	BOTTOM	HTF INLET/OUTLET	>6"
E	1	8"	CODE	WELD CAP	TOP	SPARE	10"
F	1	24"	–	OPEN	SKIRT	MANWAY	6"
G	1	1"	CODE	WELD END	BOT SHELL	THERMOWELL	10"
H	6	6"	SCH 80	OPEN	SKIRT	VENTS	X"
N							
J							
K							
L							
M1							
M2							
P							
Q							
S							

ITEM NO: A-MV-205A,B,C; B-M

NUMBER REQUIRED: SIX (6) ((3

TOTAL VOLUME (T/T): 5881 CU

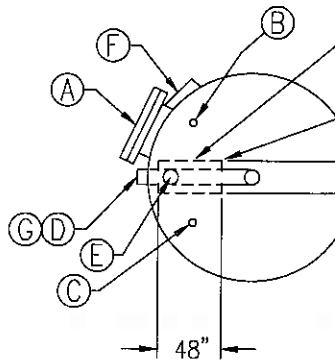

ORIENTATION

NOTES:

1. "SPECIFICATION" OR "SPEC" REFERS 6007-ESP-ATP-58-62-V200.
2. VENDOR TO PREPARE FACE OF WEL B31.3 AND ASME B16.25.
3. "PIPE SPEC" REFERS TO ABENER TE 6007-ESP-ATP-68-61-CS30 AND
4. 0% OPERATING LEVEL AT LOWER TA
5. NOT USED.
6. NET WORKING VOLUME IS BASED ON TANGENT BASIS).
7. ALL VESSELS ARE INTERCONNECTED HEADER. THERE WILL BE A COMMON
8. VESSELS SHALL BE INSULATED.
9. VESSELS ARE NOT INTERNALLY COA AND TO USE OF CORROSION INHIBIT
10. AT LEAST SIX (6) VENTS SHALL BE 80, EQUALLY-SPACED AT A MAXIMU CIRCUMFERENCE.
11. VORTEX BREAKER REQUIRED.

CONFI

REVISIONS					
NO.	DATE	DESCRIPTION	BY	BY	BY
1	3-28-12	REV NOZZLES/SPECS, ADDED DETAIL A			
0	091311	ISSUED FOR BID	TLF	HED	MZ

CONSTRUCTION

CODE: ASME SEC VII, DIV 1		STAMP: ASME	
PRESS.(PSIG)	MAX.OP. 174	MIN.OP. FV	DESIGN: 200/FV
TEMP. (°F)	MAX.OP. 680	MIN.OP. 100	DESIGN: 750
WIND VELOCITY: SEE SPEC. MPH		CORR.ALLOW: 0.0625" (1/16")	
SEISMIC ZONE: SEE SPEC.			
PHYS. & CHEM. TESTS: SEE SPEC.		STRESS RELIEVE: SEE SPEC.	

MATERIAL	SPEC	MATERIAL	SPEC
SHELL	SA-516-70	STAND PIPE	SA-516-70
		SPRAY SHIELD	SA-516-70
HEADS	SA-516-70	DAVIT/HINGE	YES, SEE SPEC
		PLATFORMS	YES, FOR THE MANWAY (J)
SKIRT	SA-516-70	LADDER (CAGED)	YES, FOR THE MANWAY (J)
		CLIPS AND PADS (PIPE SUPPORT)	YES, SEE SPEC
NOZZLES	CODE, SEE PIPE SPEC.	PAINTER TROLLEY	N/R
PIPE	CODE, SEE PIPE SPEC.	LIFTING LUGS	YES, SEE SPEC
COUPLINGS	N/R	PAINT	SKIRT AND TANK PRIMED
GASKETS	SEE PIPE SPEC	INSULATION	BY OTHERS, SEE SPEC, 8"
BOLTS	CODE	INSUL SUPPORTS PINS	YES, SEE SPEC
NUTS	CODE	GUARDRAIL	YES, FOR THE MANWAY (J)
		SPRAY NOZZLE	YES, SEE SPEC

CONNECTION SCHEDULE

MK.	NR	SIZE	RATING	FACING	LOCATION	SERVICE	PROJ
A	1	18"	CODE	RF	TOP	BLIND FLANGE	10"
B	1	3"	CS32	WELD END	TOP	HTF MAIN PUMP ORIFICE	10"
C	1	3"	CS30	WELD END	TOP	N2 ULLAGE	10"
D	1	36"	CS32	WELD END	BOTTOM	HTF INLET	>6"
E	1	8"	CODE	WELD CAP	TOP	SPARE	10"
F	1	30"	CS30	WELD END	SHELL	HTF OUTLET	10"
G	1	10"	CS32	WELD END	MANWAY COVER	HTF COOLING SPRAY	10"
H	1	24"	–	FLG	SKIRT	MANWAY	10"
I	1	1"	CODE	WELD END	BOT SHELL	THERMOWELL	10"
J	1	24"	–	RF	BOT SHELL	MANWAY	10"
K	6	6"	SCH 80	OPEN	SKIRT	VENTS	X"
L							
M1							
M2							
P							
Q							
S							

ITEM NO: A-MV-205E, B-MV-205E
NUMBER REQUIRED: TWO (2) ((1) FOR
TOTAL VOLUME (T/T): 6390 CUBIC FEE

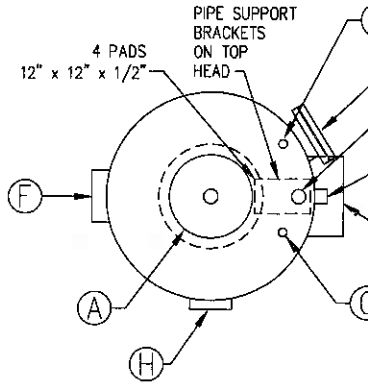

ORIENTATION

BO
(SE

CON

REVISIONS

NO.	DATE	DESCRIPTION	BY	BY	BY
1	10-15-12	REV NOZZLES/SPECS, ADDED DETAIL A			
0	091311	ISSUED FOR BID	TLF	HED	MZ

ABENER TEYMA MOJAVE

LETTER OF TRANSMITTAL

Date: May 23, 2014
Subject: Mojave Solar Project (09-AFC-5C)
Condition Number: AQ-26
Description: **Calculation and Water Sample Testing Protocol**
Submittal No.: AQ-26-00-00
To: Mr. Chris Anderson
Mojave Desert Air Quality
Management District.

WE ARE SENDING YOU

Document Name	Title	REV
AQ-26 Technical Memo		
6007-MOM-ATM-00-00-0003 R01	Test Protocol for the Cooling Towers of the Mojave Solar Project	NA

THESE ARE TRANSMITTED as checked below:

☒ For Approval

REMARKS _____

COPY TO: File SIGNED BY: _____

Vernon D. Leeming
Permitting Engineer
ABEINSA EPC

ABENER TEYMA MOJAVE

Technical Memo

Date:	May 23, 2014
Subject:	Mojave Solar Project (09-AFC-5C)
Condition Number:	AQ-26
Description:	**Calculation and Water Sample Testing Protocol**
Submittal No.:	AQ-26 -00-00

Mr. Chris Anderson
Mojave Desert Air Quality
Management District.
Permitting Department
14306 Park Ave
Victorville CA 92392
canderson@mdaqmd.ca.gov

Dear Mr. Anderson,

In compliance with AQ-26 we are submitting Test Protocol for the Cooling Towers of the Mojave Solar Project for your approval.

For your convenience, we are including the Compliance language below:

AQ-26: The project owner shall conduct all required cooling tower water tests in accordance with a District-approved test and emissions calculation protocol. Thirty (30) days prior to the first such test the project owner shall provide a written test and emissions calculation protocol for District review and approval.

Verification: The project owner shall provide an emissions calculation and water sample testing protocol to the District for approval and CPM for review at least 30 days prior to the first cooling tower water test.

Should you have any questions or comments, please don't hesitate to contact me.

COPY TO: File

SIGNED BY:

Vernon D. Leeming
Permitting Engineer
ABEINSA EPC

ABENER TEYMA MOJAVE

Manual

Client:	**Mojave Solar LLC**
Project:	**Abener Teyma Mojave**
Issue:	**Test Protocol for Cooling Towers at the Mojave Solar Project**

Document Nº:	6007-MOM-ATM-00-00-0003
Revision:	01
Date:	05/23/2014

Prepared by:	
Neha Singh. Process Engineer	Electronic Signature

Reviewed by:	
Vernon Leeming. Permitting Engineer	Electronic Signature

Approved by:	
Diego M. Rodríguez González, Engineering Director	Electronic Signature

© This document is the property of Abener Teyma Mojave. Total or partial reproduction thereof, by any means, as well as distribution to third parties, without the express written consent of Abener Teyma Mojave is strictly forbidden.

The original of this document is electronically signed and filed in the Prolog Application.

ABENER TEYMA MOJAVE

Revision Control Sheet

Revision	Date	Cause for Revision	Prepared	Reviewed	Approved
00	04-07-14		NS	VL	DRG
01	05-23-14	Updated per Client's comments	NS	VL	DRG

The original of this document is electronically signed and filed in the Prolog Application.

Table of Contents

1. Purpose 3
2. Test Protocol 3
2.1. Pre-Testing Requirements 3
2.2. Purpose and Dates of the Tests 3
2.3. Emissions Testing and Method Requirements 4
2.4. Operations during Testing 5
2.5. Quality Assurance 6
2.5.1. Calibration 6
2.5.2. Other quality assurance methods 6
2.6. Results and Recordkeeping 6
3. Appendix 6
3.1 Site plan 7
3.2 Quarterly Testing Calculation Sheet 8
3.3 Quarterly Testing log 8

1. Purpose

The purpose of this test protocol is to provide a plan and a calculation methodology for the initial and subsequent compliance tests of the cooling towers at the Mojave Solar Project (MSP). The plant will be cooled by two sets of cooling towers, one each for the Alpha and Beta sections of the plant. This plan is developed in accordance with the Mojave Desert Air Quality Management District (MDAQMD) Compliance Test Procedural Manual and MDAQMD permits B011037 and B011038. The sources covered by District permits B011037 and B011038 are the cooling towers. B011037 is the permit for the system in Alpha, while B011038 is the system in Beta. Each system is composed of six cooling fans.

The unique testing protocol number for this plan is MSP-CT-01.

Where:

MSP = Mojave Solar Project, the project indicator.
CT = Cooling Tower, an indication that this is a test for the plant cooling systems.
01= The sequential number indicating the iteration of this test protocol.

The MSP will maintain personnel appropriately certified with by one or more of the following agencies:

- CDPH-California Department of Health Treatment and Distribution/ Treatment = T-1 thru T-5, Distribution = D-1 thru D-5
- CWEA- California Water Environment Agency / for industrial waste G-1 thru G-4
- SWRCB- State Water Resources Control Board / Grade's I, II, III, IV, and V

2. Test Protocol

The MSP project shall provide an emissions calculation and water sample testing protocol to the District for approval and the California Energy Commission for review prior to the first cooling tower water test.

2.1. Pre-Testing Requirements

Per MDAQMD compliance test procedural manual, MSP may arrange a pre-test meeting with MDAQMD if necessary, at a mutually agreed upon time and place. The approved testing procedures will become the binding agreement between MSP and the District.

2.2. Purpose and Dates of the Tests

As discussed in Section 1, the purpose of the testing is to comply with District permits B011037 and B011038, specifically conditions 3 through 7. These conditions ensure that emissions of the particulate matter with a size of 10 micrometers or less (PM10) will remain below the limits identified in the permit conditions and repeated below in Section 2.3.

The initial testing to determine the relationship between the specific conductivity and the total dissolved solids (TDS) will occur prior to official startup of the plant. This conversion factor calculated experimentally will be programmed in DCS to show PM10 emissions on the DCS screen.

2.3. Emissions Testing and Method Requirements

The tests will verify the compliance of the cooling tower PM10 emissions rates through District approved methods, which are outlined in this plan. Initial testing is expected to show concentrations are near or below the permit limits. The current permit requirements per cooling tower set are:

- The drift rate will not exceed 0.0005%.
- The maximum circulation rate is 90,000 gallons per minute (gpm).
- PM10 emissions shall not exceed 2.24 pounds per hour (lb/hr).
- TDS shall not exceed 10,000 parts per million (ppm) on a calendar monthly basis.
- Operation of this equipment shall not exceed 5,840 hours per rolling 12 month period (hrs/yr).

The instantaneous reading of the specific conductivity will be converted to the TDS and TDS to PM10 using experimentally determined conversion factor. Thus obtained instantaneous value of PM10 will be displayed on the DCS screen as well. MSP will perform the quarterly testing to determine the relationship between TDS and specific conductivity on site.

Test Method for Quarterly Testing

Five samples of water from each cooling tower will be collected and tested for the relationship between the TDS and the specific conductivity. The samples will be caught when cooling tower is in its "normal operation" mode. The volume (ml) of the sample shall be determined by the qualified and trained technician. The conductivity of the sample is measured using a hand held probe. The experimental procedure described in ASTM D5907 is used to determine the total dissolved solid of cooling tower sample. A well-mixed sample is filtered through a weighted standard glass fiber filter. The suspended solids are retained on the filter. The filtered sample contains dissolved solid which is then heated to 180 °C in a tared vessel/dish to a constant weight (i.e. heat the sample until the weight stops changing). The total dissolved solid is calculated using the following equation:

$$TDS\left(\frac{mg}{L}\ or\ ppm\right) = \frac{(\text{increase in the weight of the tared dish (mg)} \cdot 1000)}{\text{sample volume (ml)}}$$

A spread sheet is developed to calculate the conversion constants and to keep a log of quarterly experiments. A power equation will be used to determine constants as shown below.

$$TDS = aC^b$$

Where:

TDS	=	Total Dissolved Solids (ppm)
a	=	Multiplicative coefficient to fit quarterly data
b	=	Power coefficient to fit quarterly data
C	=	Conductivity (µS/cm)

Once the relationship between TDS and conductivity is determined by the quarterly testing, the constants ("a" and "b") calculated above will be inserted into the DCS screen to calculate PM10 emissions. The DCS will be programed to calculate PM10 automatically using the following equation in which all TDS is assumed to become PM10, per the U.S. Environmental Protection Agency (EPA) AP 42 Section 13.4. The DCS will show a plot of the PM10 value for each hour with maximum allowable also shown on the same plot.

$$PM_{10} = Circ \times Drift \times \rho \times TDS \times \frac{60}{10^6}$$

Where:

PM_{10}	=	Calculated PM_{10} emissions (lb/hr).
Circ	=	Circulation Rate (gallons per minute [gpm]). The default value is the permitted maximum of 90,000 gpm.
Drift	=	Drift rate (%). The default value is the permitted maximum of 0.0005%.
ρ	=	Density of water (lbs/gal). The default value is 8.3 pounds per gallon.
TDS	=	Total Dissolved Solids (ppm). This value is derived from the quarterly testing results.
60	=	Conversion factor for minutes per hour.
10^6	=	Conversion factor for ppm.

Where:

Using already known parameters, the equation above reduces to:

$$PM_{10}\ (lb/hr) = \frac{90{,}000\ gpm \times 0.0005\% \times 8.3\frac{lb}{gal} \times 60\frac{min}{hr} \times TDS}{10^6\ ppm}$$

$$PM_{10}\ (lb/hr) = 0.0002241 * TDS\ ppm$$

Results from each quarter will be saved in the "Quarterly Test Log" (see annex 3.3) spreadsheet and a hard copy of the previous quarter's spreadsheet will be kept on-site for 5 years. All logs will be provided to the District upon request.

2.4. Operations during Testing

Operational conditions during the testing will continue normally unless otherwise required. The number of hours of operation of the cooling tower will be extracted from the data historian. During normal operation of the cooling tower, 3 main pumps will operate. The operating status of

all 3 main cooling water pumps will be utilized to determine the operating hours of the cooling itself. Digital and/or hard copies of logs will be provided to the District upon request.

2.5. Quality Assurance

The following quality assurance requirements will be met during the testing procedures.

2.5.1. Calibration

Equipment will be calibrated the day of testing. If it is not calibrated on the day of use, results will be considered invalid.

2.5.2. Other quality assurance methods

Other quality assurance methods, including standard operating procedures incorporating best management practices, will be followed.

2.6. Results and Recordkeeping

Digital and hard copies of the operations logs, test results, and calculation results will be kept on-site for a minimum of 5 years, and will be made available to the District upon request.

3. Appendix

3.1 Site plan
3.2 Quarterly Testing Calculation Sheet
3.3 Quarterly Testing Log

ABENER TEYMA MOJAVE

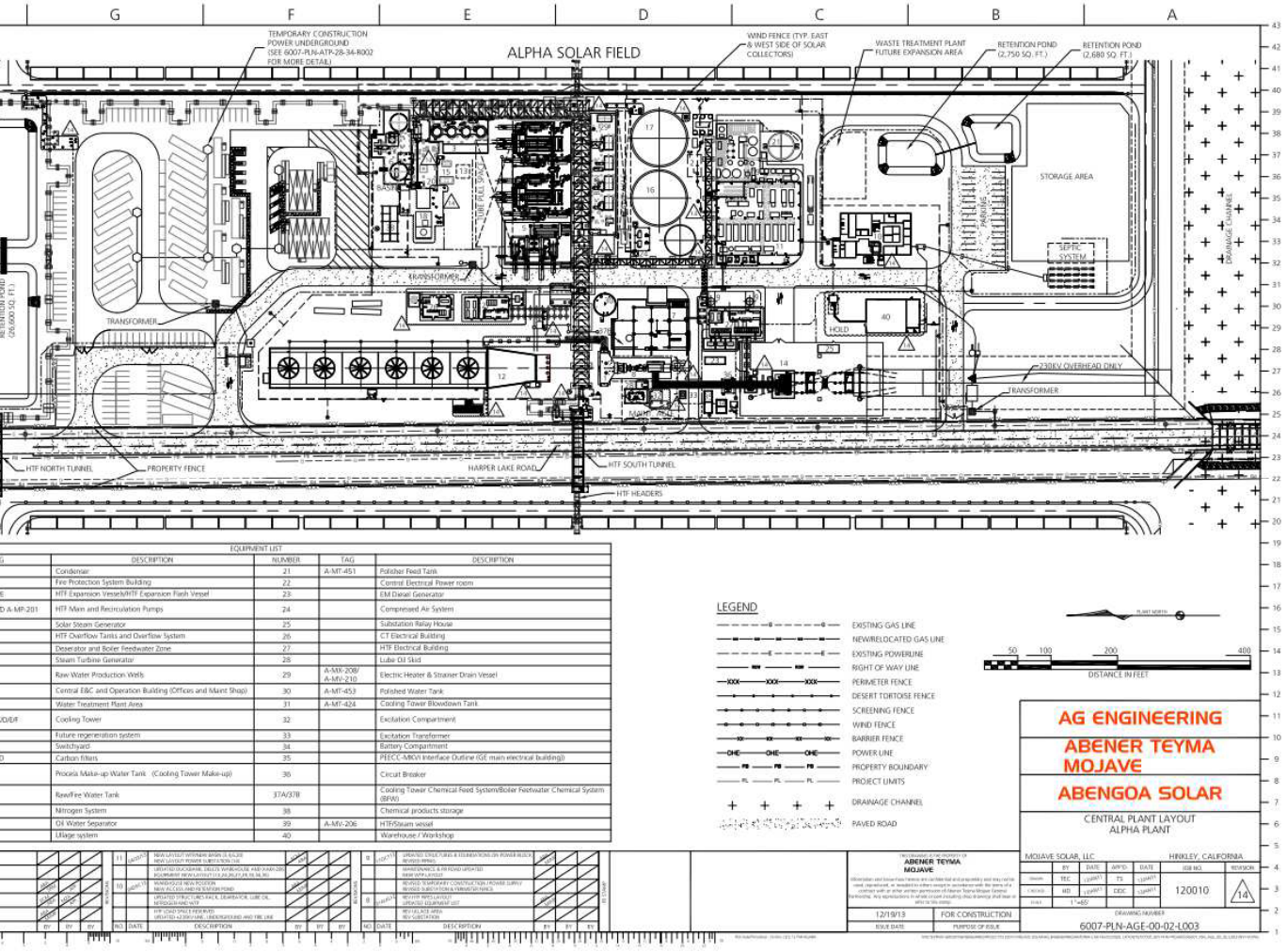

EQUIPMENT LIST				
	DESCRIPTION	NUMBER	TAG	DESCRIPTION
	Condenser	21	A-MT-451	Polisher Feed Tank
	Fire Protection System Building	22		Control Electrical Power room
E	HTF Expansion Vessels/HTF Expansion Flash Vessel	23		EM Diesel Generator
D A-MP-201	HTF Main and Recirculation Pumps	24		Compressed Air System
	Solar Steam Generator	25		Substation Relay House
	HTF Overflow Tanks and Overflow System	26		CT Electrical Building
	Deaerator and Boiler Feedwater Zone	27		HTF Electrical Building
	Steam Turbine Generator	28		Lube Oil Skid
	Raw Water Production Wells	29	A-MX-208/ A-MV-210	Electric Heater & Strainer Drain Vessel
	Central E&C and Operation Building (Offices and Maint Shop)	30	A-MT-453	Polished Water Tank
	Water Treatment Plant Area	31	A-MT-424	Cooling Tower Blowdown Tank
OD/E/F	Cooling Tower	32		Excitation Compartment
	Future regeneration system	33		Excitation Transformer
	Switchyard	34		Battery Compartment
D	Carbon filters	35		PEECC-MKVI Interface Outline (GE main electrical building))
	Procela Make-up Water Tank (Cooling Tower Make-up)	36		Circuit Breaker
	Raw/Fire Water Tank	37A/37B		Cooling Tower Chemical Feed System/Boiler Feedwater Chemical System (BFW)
	Nitrogen System	38		Chemical products storage
	Oil Water Separator	39	A-MV-206	HTF/Steam vessel
	Ullage system	40		Warehouse / Workshop

s document is electronically signed and filed in the Prolog Application.

3.2 Quarterly Testing Calculation Sheet

TDS vs Conductivity Calculation for PM10 Emission Date:_____

Sample#	Time sample was caught	Sample Volume, ml	Weight of the tared dish	TDS (ppm or mg/L)	Conductivity of the sample, µS/cm
1					
2					
3					
4					
5					

$$TDS\ \left(\frac{mg}{L}\ or\ ppm\right) = \frac{\text{(increase in the weight of the tared dish (mg)*1000)}}{\text{sample volume (ml)}}$$

The following equation shows the relation between the TDS and Conductivity.
The value of constants "a" and "b" can be found from the chart in the next tab called "TDS vs Conductivity chart"

$$TDS = aC^b$$

Where:
TDS = Total Dissolved Solids (ppm)
a = Multiplicative coefficient to fit quarterly data
b = Power coefficient to fit quarterly data
C = Conductivity (µS/cm)

3.3 Quarterly Testing log

TDS vs Conductivity

Plant (Alpha/Beta)	Date of the experiment	Sample collected by	Experiment run by	Value of Constants	
				a	b

Chris Anderson
05/27/2014 08:16 AM

Send To	"vernon.leeming@abeinsaepc.abengoa.com" <vernon.leeming@abeinsaepc.abengoa.com>
cc	"Rundquist, Dale@Energy" <Dale.Rundquist@energy.ca.gov>, "frances.sanchez@solar.abengoa.com" <frances.sanchez@solar.abengoa.com>, "Frederick.Redell@solar.abengoa.com" <Frederick.Redell@solar.abengoa.com>, "holmes.bassette@solar.abengoa.com"
bcc	
Subject	RE: AQ-26-00-00

Thank you Vernon.

Approve as submitted; a copy will be added to the file.

Regards

Chris A.

From: vernon.leeming@abeinsaepc.abengoa.com [mailto:vernon.leeming@abeinsaepc.abengoa.com]
Sent: Friday, May 23, 2014 10:24 AM
To: Chris Anderson
Cc: Rundquist, Dale@Energy; frances.sanchez@solar.abengoa.com; Frederick.Redell@solar.abengoa.com; holmes.bassette@solar.abengoa.com; Kathleen.Sullivan@solar.abengoa.com; nicholas.potrovitza@solar.abengoa.com; Steven.Pochmara@abeinsaepc.abengoa.com; william.grisolia@solar.abengoa.com
Subject: AQ-26-00-00

Dear Mr. Anderson:

In compliance with AQ-26, we are submitting Test Protocol for the Cooling Towers of the Mojave Solar Project for your approval. Should you have any questions or comments, please don't hesitate to contact me.

Regards

Vernon Leeming -
Civil Engineering E.I.T.
Permitting

ABEINSA EPC
13911 Park Avenue, Suite 208 Victorville, California 92392
Cell: 661-754-6542 (BB)
vernon.leeming@abeinsaepc.abengoa.com

Eco-Tip: Printing e-mails is usually a waste.

**********Internet Email Confidentiality Footer**********

This email and any files transmitted with it are confidential and intended solely for the use of the organization or individual to whom they are addressed. It is expressly forbidden to retransmit or copy email and/or this attached files without our permission. If you are not the addressee indicated in this message (or responsible for delivery of the message to such person), you may not copy or deliver this message to anyone. In such case, you should destroy this message and kindly notify the sender by reply email. Please advise immediately if you or your employer does not consent to Internet email for messages of this kind. Opinions, conclusions and other information in this message that do not relate to the official business of my firm shall be understood as neither given nor endorsed by it.

****** Confidencialidad de Correo electrónico de Internet ******

Este correo electrónico y cualquier archivo transmitido con el, es confidencial y destinado exclusivamente para el empleo de la organización o el individuo a quien esta dirigido. Esta expresamente prohibido su reenvio o copia del correo electrónico y/o de los archivos anexados sin permiso del remitente. El contenido esta protegido según la regulación sobre la Protección de Datos e Información Personal. Si usted no es el destinatario indicado en este mensaje (o responsable de la entrega del mensaje a tal persona), no puede copiar, reenviar o entregar este mensaje. En tal caso, usted debe destruir este mensaje y notificar al remitente por el correo electrónico de respuesta. Puede notificar igualmente si no desea recibir correos electrónicos de esta clase. Las opiniones, conclusiones y otra información en este mensaje que no se relaciona con la actividad de la compañía ni serán entendidas como autorizadas por ésta.

ABENER TEYMA MOJAVE

LETTER OF TRANSMITTAL

Date: May 23, 2014
Subject: Mojave Solar Project (09-AFC-5C)
Condition Number: AQ-26
Description: **Calculation and Water Sample Testing Protocol**
Submittal No.: AQ-26-00-00
To: Mr. Dale Rundquist, CPM
California Energy Commission

WE ARE SENDING YOU

Document Name	Title	REV
AQ-26 Technical Memo		
6007-MOM-ATM-00-00-0003 R01	Test Protocol for the Cooling Towers of the Mojave Solar Project.	NA

THESE ARE TRANSMITTED as checked below:

☒ For Review

REMARKS

COPY TO: File

SIGNED BY:

Vernon D. Leeming
Permitting Engineer
ABEINSA EPC

ABENER TEYMA MOJAVE

Technical Memo

Date:	May 23, 2014
Subject:	Mojave Solar Project (09-AFC-5C)
Condition Number:	AQ-26
Description:	**Calculation and Water Sample Testing Protocol**
Submittal No.:	AQ-26 -00-00

Mr. Dale Rundquist, CPM
California Energy Commission
1516 Ninth Street (MS-2000)
Sacramento, CA 95814
DRundquist@energy.state.ca.us

Dear Mr. Rundquist,

In compliance with AQ-26 we are submitting Test Protocol for the Cooling Towers of the Mojave Solar Project for your review.

For your convenience, we are including the Compliance language below:

AQ-26: The project owner shall conduct all required cooling tower water tests in accordance with a District-approved test and emissions calculation protocol. Thirty (30) days prior to the first such test the project owner shall provide a written test and emissions calculation protocol for District review and approval.

Verification: The project owner shall provide an emissions calculation and water sample testing protocol to the District for approval and CPM for review at least 30 days prior to the first cooling tower water test.

Should you have any questions or comments, please don't hesitate to contact me.

COPY TO: File

SIGNED BY:

Vernon D. Leeming
Permitting Engineer
ABEINSA EPC

ABENER TEYMA MOJAVE

Manual

Client:	**Mojave Solar LLC**
Project:	**Abener Teyma Mojave**
Issue:	**Test Protocol for Cooling Towers at the Mojave Solar Project**

Document Nº:	6007-MOM-ATM-00-00-0003
Revision:	01
Date:	05/23/2014

Prepared by:	
Neha Singh. Process Engineer	Electronic Signature

Reviewed by:	
Vernon Leeming. Permitting Engineer	Electronic Signature

Approved by:	
Diego M. Rodríguez González, Engineering Director	Electronic Signature

© This document is the property of Abener Teyma Mojave. Total or partial reproduction thereof, by any means, as well as distribution to third parties, without the express written consent of Abener Teyma Mojave is strictly forbidden.

The original of this document is electronically signed and filed in the Prolog Application.

ABENER TEYMA MOJAVE

Revision Control Sheet

Revision	Date	Cause for Revision	Prepared	Reviewed	Approved
00	04-07-14		NS	VL	DRG
01	05-23-14	Updated per Client's comments	NS	VL	DRG

The original of this document is electronically signed and filed in the Prolog Application.

Table of Contents

1. Purpose 3
2. Test Protocol 3
2.1. Pre-Testing Requirements 3
2.2. Purpose and Dates of the Tests 3
2.3. Emissions Testing and Method Requirements 4
2.4. Operations during Testing 5
2.5. Quality Assurance 6
2.5.1. Calibration 6
2.5.2. Other quality assurance methods 6
2.6. Results and Recordkeeping 6
3. Appendix 6
3.1 Site plan 7
3.2 Quarterly Testing Calculation Sheet 8
3.3 Quarterly Testing log 8

1. Purpose

The purpose of this test protocol is to provide a plan and a calculation methodology for the initial and subsequent compliance tests of the cooling towers at the Mojave Solar Project (MSP). The plant will be cooled by two sets of cooling towers, one each for the Alpha and Beta sections of the plant. This plan is developed in accordance with the Mojave Desert Air Quality Management District (MDAQMD) Compliance Test Procedural Manual and MDAQMD permits B011037 and B011038. The sources covered by District permits B011037 and B011038 are the cooling towers. B011037 is the permit for the system in Alpha, while B011038 is the system in Beta. Each system is composed of six cooling fans.

The unique testing protocol number for this plan is MSP-CT-01.

Where:

MSP = Mojave Solar Project, the project indicator.
CT = Cooling Tower, an indication that this is a test for the plant cooling systems.
01= The sequential number indicating the iteration of this test protocol.

The MSP will maintain personnel appropriately certified with by one or more of the following agencies:

- CDPH-California Department of Health Treatment and Distribution/ Treatment = T-1 thru T-5, Distribution = D-1 thru D-5
- CWEA- California Water Environment Agency / for industrial waste G-1 thru G-4
- SWRCB- State Water Resources Control Board / Grade's I, II, III, IV, and V

2. Test Protocol

The MSP project shall provide an emissions calculation and water sample testing protocol to the District for approval and the California Energy Commission for review prior to the first cooling tower water test.

2.1. Pre-Testing Requirements

Per MDAQMD compliance test procedural manual, MSP may arrange a pre-test meeting with MDAQMD if necessary, at a mutually agreed upon time and place. The approved testing procedures will become the binding agreement between MSP and the District.

2.2. Purpose and Dates of the Tests

As discussed in Section 1, the purpose of the testing is to comply with District permits B011037 and B011038, specifically conditions 3 through 7. These conditions ensure that emissions of the particulate matter with a size of 10 micrometers or less (PM10) will remain below the limits identified in the permit conditions and repeated below in Section 2.3.

The initial testing to determine the relationship between the specific conductivity and the total dissolved solids (TDS) will occur prior to official startup of the plant. This conversion factor calculated experimentally will be programmed in DCS to show PM10 emissions on the DCS screen.

2.3. Emissions Testing and Method Requirements

The tests will verify the compliance of the cooling tower PM10 emissions rates through District approved methods, which are outlined in this plan. Initial testing is expected to show concentrations are near or below the permit limits. The current permit requirements per cooling tower set are:

- The drift rate will not exceed 0.0005%.
- The maximum circulation rate is 90,000 gallons per minute (gpm).
- PM10 emissions shall not exceed 2.24 pounds per hour (lb/hr).
- TDS shall not exceed 10,000 parts per million (ppm) on a calendar monthly basis.
- Operation of this equipment shall not exceed 5,840 hours per rolling 12 month period (hrs/yr).

The instantaneous reading of the specific conductivity will be converted to the TDS and TDS to PM10 using experimentally determined conversion factor. Thus obtained instantaneous value of PM10 will be displayed on the DCS screen as well. MSP will perform the quarterly testing to determine the relationship between TDS and specific conductivity on site.

Test Method for Quarterly Testing

Five samples of water from each cooling tower will be collected and tested for the relationship between the TDS and the specific conductivity. The samples will be caught when cooling tower is in its "normal operation" mode. The volume (ml) of the sample shall be determined by the qualified and trained technician. The conductivity of the sample is measured using a hand held probe. The experimental procedure described in ASTM D5907 is used to determine the total dissolved solid of cooling tower sample. A well-mixed sample is filtered through a weighted standard glass fiber filter. The suspended solids are retained on the filter. The filtered sample contains dissolved solid which is then heated to 180 °C in a tared vessel/dish to a constant weight (i.e. heat the sample until the weight stops changing). The total dissolved solid is calculated using the following equation:

$$TDS\left(\frac{mg}{L}\ or\ ppm\right) = \frac{(\text{increase in the weight of the tared dish (mg)} \cdot 1000)}{\text{sample volume (ml)}}$$

A spread sheet is developed to calculate the conversion constants and to keep a log of quarterly experiments. A power equation will be used to determine constants as shown below.

$$TDS = aC^b$$

Where:

TDS	=	Total Dissolved Solids (ppm)
a	=	Multiplicative coefficient to fit quarterly data
b	=	Power coefficient to fit quarterly data
C	=	Conductivity (µS/cm)

Once the relationship between TDS and conductivity is determined by the quarterly testing, the constants ("a" and "b") calculated above will be inserted into the DCS screen to calculate PM10 emissions. The DCS will be programed to calculate PM10 automatically using the following equation in which all TDS is assumed to become PM10, per the U.S. Environmental Protection Agency (EPA) AP 42 Section 13.4. The DCS will show a plot of the PM10 value for each hour with maximum allowable also shown on the same plot.

$$PM_{10} = Circ \times Drift \times \rho \times TDS \times \frac{60}{10^6}$$

Where:

PM_{10}	=	Calculated PM_{10} emissions (lb/hr).
Circ	=	Circulation Rate (gallons per minute [gpm]). The default value is the permitted maximum of 90,000 gpm.
Drift	=	Drift rate (%). The default value is the permitted maximum of 0.0005%.
ρ	=	Density of water (lbs/gal). The default value is 8.3 pounds per gallon.
TDS	=	Total Dissolved Solids (ppm). This value is derived from the quarterly testing results.
60	=	Conversion factor for minutes per hour.
10^6	=	Conversion factor for ppm.

Where:

Using already known parameters, the equation above reduces to:

$$PM_{10}\ (lb/hr) = \frac{90{,}000\ gpm \times 0.0005\% \times 8.3\frac{lb}{gal} \times 60\frac{min}{hr} \times TDS}{10^6\ ppm}$$

$$PM_{10}\ (lb/hr) = 0.0002241 * TDS\ ppm$$

Results from each quarter will be saved in the "Quarterly Test Log" (see annex 3.3) spreadsheet and a hard copy of the previous quarter's spreadsheet will be kept on-site for 5 years. All logs will be provided to the District upon request.

2.4. Operations during Testing

Operational conditions during the testing will continue normally unless otherwise required. The number of hours of operation of the cooling tower will be extracted from the data historian. During normal operation of the cooling tower, 3 main pumps will operate. The operating status of

all 3 main cooling water pumps will be utilized to determine the operating hours of the cooling itself. Digital and/or hard copies of logs will be provided to the District upon request.

2.5. Quality Assurance

The following quality assurance requirements will be met during the testing procedures.

2.5.1. Calibration

Equipment will be calibrated the day of testing. If it is not calibrated on the day of use, results will be considered invalid.

2.5.2. Other quality assurance methods

Other quality assurance methods, including standard operating procedures incorporating best management practices, will be followed.

2.6. Results and Recordkeeping

Digital and hard copies of the operations logs, test results, and calculation results will be kept on-site for a minimum of 5 years, and will be made available to the District upon request.

3. Appendix

3.1 Site plan
3.2 Quarterly Testing Calculation Sheet
3.3 Quarterly Testing Log

ABENER TEYMA MOJAVE

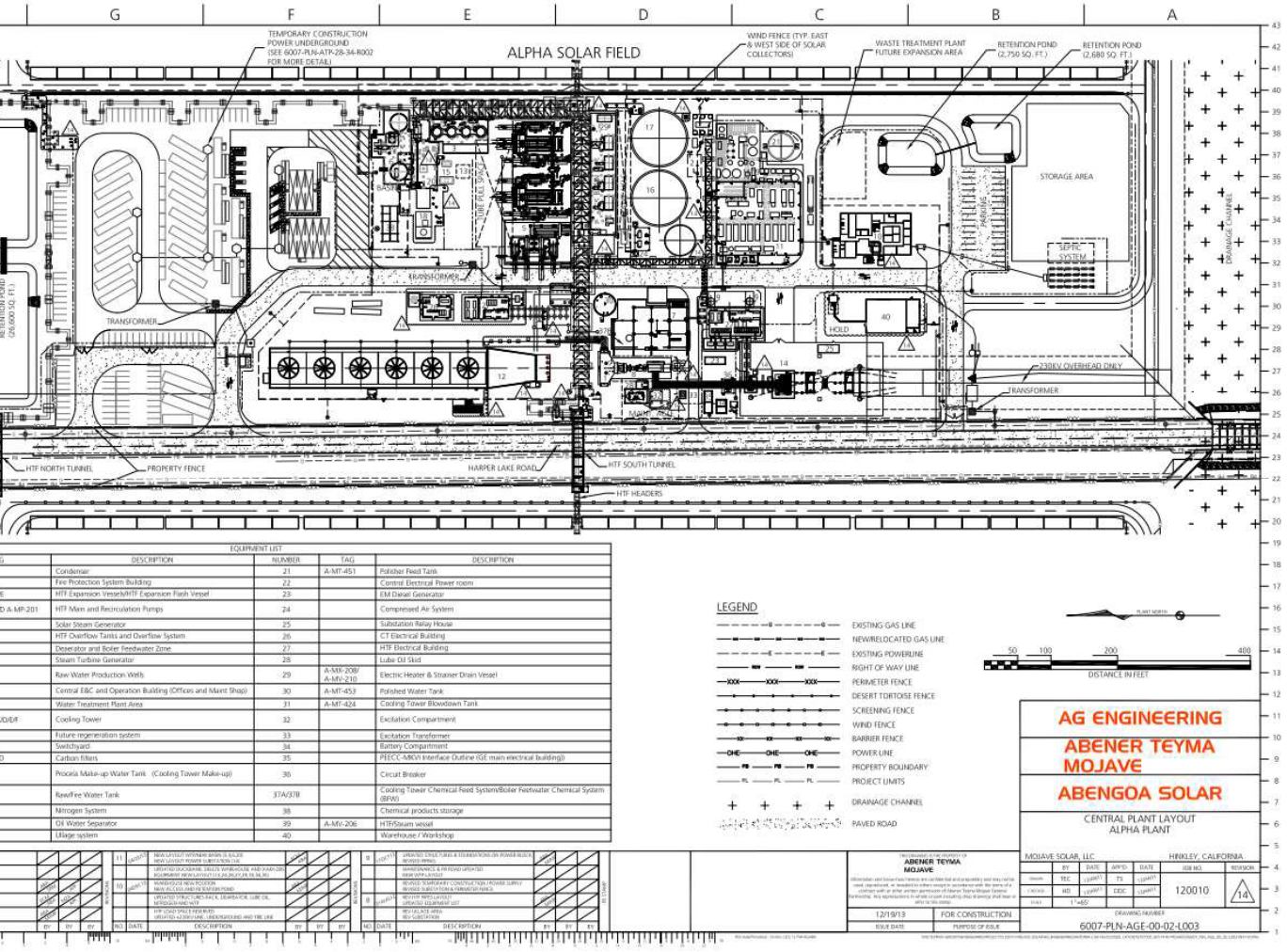

EQUIPMENT LIST				
	DESCRIPTION	NUMBER	TAG	DESCRIPTION
	Condenser	21	A-MT-451	Polisher Feed Tank
	Fire Protection System Building	22		Control Electrical Power room
E	HTF Expansion Vessels/HTF Expansion Flash Vessel	23		EM Diesel Generator
D A-MP-201	HTF Main and Recirculation Pumps	24		Compressed Air System
	Solar Steam Generator	25		Substation Relay House
	HTF Overflow Tanks and Overflow System	26		CT Electrical Building
	Deaerator and Boiler Feedwater Zone	27		HTF Electrical Building
	Steam Turbine Generator	28		Lube Oil Skid
	Raw Water Production Wells	29	A-MX-208/ A-MV-210	Electric Heater & Strainer Drain Vessel
	Central E&C and Operation Building (Offices and Maint Shop)	30	A-MT-453	Polished Water Tank
	Water Treatment Plant Area	31	A-MT-424	Cooling Tower Blowdown Tank
OD/E/F	Cooling Tower	32		Excitation Compartment
	Future regeneration system	33		Excitation Transformer
	Switchyard	34		Battery Compartment
D	Carbon filters	35		PEECC-MKVI Interface Outline (GE main electrical building))
	Procela Make-up Water Tank (Cooling Tower Make-up)	36		Circuit Breaker
	Raw/Fire Water Tank	37A/37B		Cooling Tower Chemical Feed System/Boiler Feedwater Chemical System (BFW)
	Nitrogen System	38		Chemical products storage
	Oil Water Separator	39	A-MV-206	HTF/Steam vessel
	Ullage system	40		Warehouse / Workshop

s document is electronically signed and filed in the Prolog Application.

3.2 Quarterly Testing Calculation Sheet

TDS vs Conductivity Calculation for PM10 Emission Date:_____

Sample#	Time sample was caught	Sample Volume, ml	Weight of the tared dish	TDS (ppm or mg/L)	Conductivity of the sample, µS/cm
1					
2					
3					
4					
5					

$$TDS\ \left(\frac{mg}{L}\ or\ ppm\right) = \frac{\text{(increase in the weight of the tared dish (mg)*1000)}}{\text{sample volume (ml)}}$$

The following equation shows the relation between the TDS and Conductivity.
The value of constants "a" and "b" can be found from the chart in the next tab called "TDS vs Conductivity chart"

$$TDS = aC^b$$

Where:
TDS = Total Dissolved Solids (ppm)
a = Multiplicative coefficient to fit quarterly data
b = Power coefficient to fit quarterly data
C = Conductivity (µS/cm)

3.3 Quarterly Testing log

TDS vs Conductivity

Plant (Alpha/Beta)	Date of the experiment	Sample collected by	Experiment run by	Value of Constants	
				a	b

ABENER TEYMA MOJAVE

LETTER OF TRANSMITTAL

Date: April 20, 2014
Subject: Mojave Solar Project (09-AFC-5C)
Condition Number: AQ-32
Description: **Non-resettable hour meter for the diesel fueled emergency generator.**
Submittal No.: AQ-32 -00-00
To: Mr. Chris Anderson
Mojave Desert Air Quality Management District.

WE ARE SENDING YOU

Document Name	Title	REV
AQ-32-00-00 Technical Memo		
SPECIFICATIONS	Non-resettable hour meter for the diesel fueled emergency generator.	NA

THESE ARE TRANSMITTED as checked below:

☒ For Approval

REMARKS _____

COPY TO: File SIGNED BY: _____

Vernon D. Leeming
Permitting Engineer
ABEINSA EPC

ABENER TEYMA MOJAVE

Technical Memo

Date:	April 20, 2014
Subject:	Mojave Solar Project (09-AFC-5C)
Condition Number:	AQ-32
Description:	**Non-resettable hour meter for the diesel fueled emergency generator.**
Submittal No.:	AQ-32 -00-00

Mr. Chris Anderson
Mojave Desert Air Quality Management District.
Permitting Department
14306 Park Ave
Victorville CA 92392
canderson@mdaqmd.ca.gov

Dear Mr. Anderson,

In compliance with AQ-32 we are submitting the specifications for the Non-resettable hour meter for the diesel fueled emergency generator.

For your convenience, we are including the Compliance language below:

EQUIPMENT DESCRIPTION
Two - 190 HP diesel fueled emergency generator engines, each driving a generator.

AQ-32 A non-resettable hour meter with a minimum display capability of 9,999 hours shall be installed and maintained on this unit to indicate elapsed engine operating time. (Title 17 CCR §93115.10(e)(1)).

Verification: At least thirty (30) days prior to the installation of the engine, the project owner shall provide the District and the CPM the specification of the hour meter.

Should you have any questions or comments, please don't hesitate to contact me.

COPY TO: File SIGNED BY:

Vernon D. Leeming
Permitting Engineer
ABEINSA EPC

AUTOMATIC CONTROL PANEL AUT-MP12

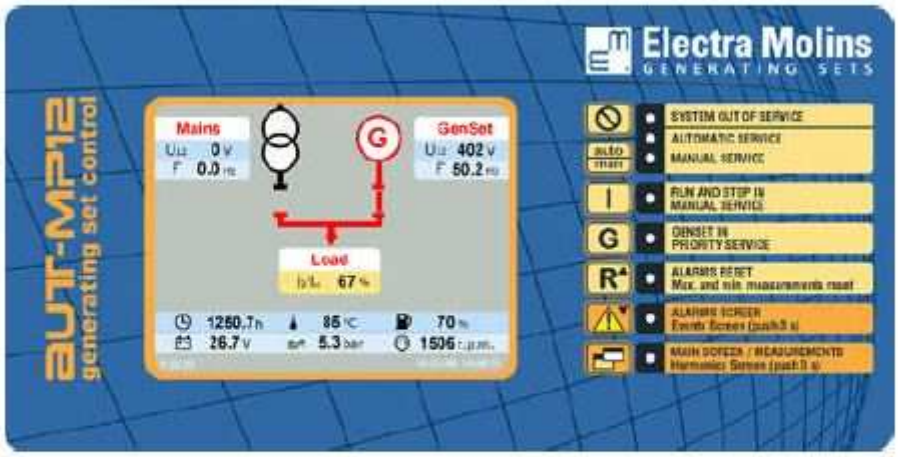

INTRODUCTION

The AUT-MP12 automatic control panel is based on a programmable module with three microprocessors, each of them specialized in its respective task of electrical measurements, gen set operation logic and communications. This design philosophy ensures a high processing capability.

The design requirements include the operation in extreme ambient temperature conditions (from -30ºC to +70ºC) and a high level of protection against electrical disturbances. It is therefore a panel of a great reliability and toughness, that results from 60 years of experience of Electra Molins dedicated to the design and manufacture of automatic control modules.

A 5.7" colour TFT screen provides an easy display of the gen set operating status, electrical measurements, alarms, events and the harmonics analysis.

MAIN SCREEN

The main screen allows for complete control and monitoring of generator operation; the other screens provide more detailed information.

The main screen shows the voltage and frequency of the generating set, the load connected and the following diesel engine measurements:

- Working hours counter.
- Cooling liquid temperature.
- Fuel level.
- Battery voltage.
- Electronic battery charger current.
- Oil pressure.
- Diesel engine speed.

AUT-MP12DR for automatic generators triggered by an external start-up signal.

This external start-up signal normally comes from a switching control unit such as the CON-2000MP, which detects the mains failure.
The switching control equipment is normally mounted in the switch cabinet.
It can be used with any type of switching mechanism and must be used when switching is done by means of automatic motorized switches.
This type of control panel should also be used when there is more than one switch and independent control of each one is desired.

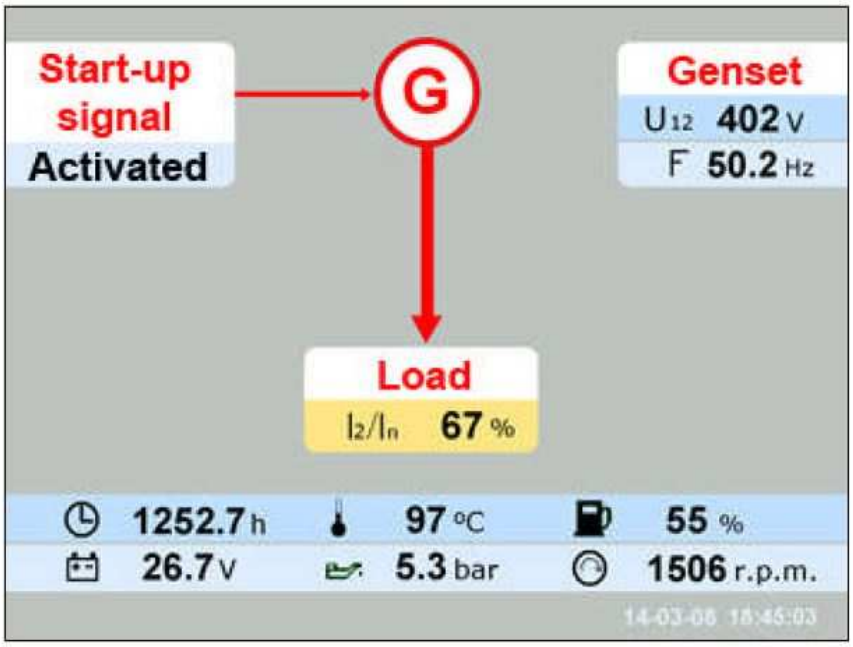

Main screen of the AUT-MP12DR control panel

Electra Molins
GRUPOS ELECTRÓGENOS

GRAN VÍA STREET, 434 – 08015 BARCELONA - SPAIN
TEL. +034 93 289 25 40
www.electramolins.es

DATASHEET FOR MP12 – CONXX12 SERIES HARDWARE

Supply:

1 Input 12V / 24V – 700mA. Range 10 … 32Vdc.

Analogue Inputs:

2 Voltage inputs 3-Phase 400Vac. Galvanically isolated. Range 190 ... 480 Vac. Consumption < 0,25VA.
2 Current inputs 3-Phase 5Aac. Galvanically isolated. Range 1 ... 6 Vac. Consumption < 0,25VA .
Overcurrent: 4xIn Constant. 20xIn 1 sec.
2 Voltage inputs 24Vdc. Range 10 … 32Vdc.
1 Current input 4Adc. Range 0,01 … 4 Adc.
3 Resistive inputs for VDO engine sensors. Range 30 … 220 Ω.
1 Resistive inputs for fuel sensor. Range 0 … 20 kΩ.

Analogue outputs:

1 Voltage output. Range 0 … 10V. Imax: 20mA.

Digital inputs:

14 Optocoupled inputs with 1 common. Range 8 ... 32V. Internal resistance 3k3 Ω.
4 Optocoupled inputs with independent common. Range 8 ... 32V. Internal resistance 3k3 Ω.

Digital outputs:

2 Optocoupled outputs. Range 10 … 32Vdc. Imax: 50mA.
8 Free voltage contact outputs. Rated current 12Aac / 0,3Adc. Rated voltage: 250Vac / 250Vdc.
8 Free voltage contact outputs. Rated current 6Aac / 0,3Adc. Rated voltage: 250Vac / 250Vdc.

Communications:

1 Serial port RS-485 protocol ModBus/Rtu. Slave.
1 Serial port RS-232 protocol ModBus/Rtu. Master /Slave.
1 Serial port CAN protocol J1939. Communication with diesel engines.
1 Serial port CAN protocol EM12. Communication between controllers.
1 Serial port Ethernet 10/100MB, Protocol SNMP, SNTP, TCP/IP.
1 Serial port USB type B. Controller programming.

Event log:

Event log referenced to internal clock and calendar. Not resettable by operator.

Internal clock and calendar:

Clock format: Hours-minutes-seconds. 24h.
Calendar format: Day-month-year.
Not resettables by operator.

Genset operating hours counter (Only MP12 controllers):

Range: 0 to 99999.9 h.
Accuracy: 0,1h.
Not resettable by operator.

Enviromental conditions:

Temperature: -30 .. 70ºC.
Humity: 95% @ 40ºC.

Dimensions and weight:

288x144x72mm (WxHxB). 1,95kg.

ABENER TEYMA MOJAVE

LETTER OF TRANSMITTAL

Date: April 20, 2014
Subject: Mojave Solar Project (09-AFC-5C)
Condition Number: AQ-32
Description: **Non-resettable hour meter for the diesel fueled emergency generator.**
Submittal No.: AQ-32 -00-00
To: Mr. Dale Rundquist, CPM
California Energy Commission

WE ARE SENDING YOU

Document Name	Title	REV
AQ-32-00-00 Technical Memo		
SPECIFICATIONS	Non-resettable hour meter for the diesel fueled emergency generator.	NA

THESE ARE TRANSMITTED as checked below:

☒ For Approval

REMARKS

COPY TO: File

SIGNED BY:

Vernon D. Leeming
Permitting Engineer
ABEINSA EPC

ABENER TEYMA MOJAVE

Technical Memo

Date:	April 20, 2014
Subject:	Mojave Solar Project (09-AFC-5C)
Condition Number:	AQ-32
Description:	**Non-resettable hour meter for the diesel fueled emergency generator.**
Submittal No.:	AQ-32 -00-00

Mr. Dale Rundquist, CPM
California Energy Commission
1516 Ninth Street (MS-2000)
Sacramento, CA 95814
DRundquist@energy.state.ca.us

Dear Mr. Rundquist,

In compliance with AQ-32 we are submitting the specifications for the Non-resettable hour meter for the diesel fueled emergency generator.

For your convenience, we are including the Compliance language below:

EQUIPMENT DESCRIPTION
Two - 190 HP diesel fueled emergency generator engines, each driving a generator.

AQ-32 A non-resettable hour meter with a minimum display capability of 9,999 hours shall be installed and maintained on this unit to indicate elapsed engine operating time. (Title 17 CCR §93115.10(e)(1)).

Verification: At least thirty (30) days prior to the installation of the engine, the project owner shall provide the District and the CPM the specification of the hour meter.

Should you have any questions or comments, please don't hesitate to contact me.

COPY TO: File SIGNED BY:

Vernon D. Leeming
Permitting Engineer
ABEINSA EPC

AUTOMATIC CONTROL PANEL AUT-MP12

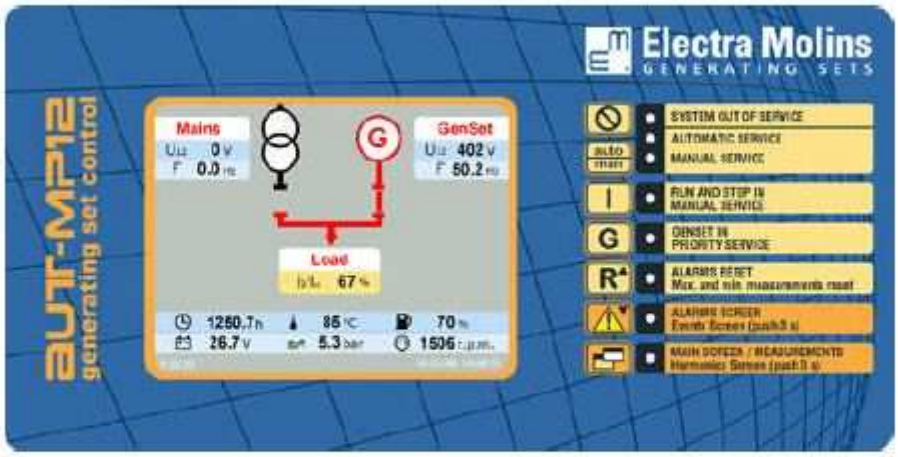

INTRODUCTION

The AUT-MP12 automatic control panel is based on a programmable module with three microprocessors, each of them specialized in its respective task of electrical measurements, gen set operation logic and communications. This design philosophy ensures a high processing capability.

The design requirements include the operation in extreme ambient temperature conditions (from -30ºC to +70ºC) and a high level of protection against electrical disturbances. It is therefore a panel of a great reliability and toughness, that results from 60 years of experience of Electra Molins dedicated to the design and manufacture of automatic control modules.

A 5.7" colour TFT screen provides an easy display of the gen set operating status, electrical measurements, alarms, events and the harmonics analysis.

MAIN SCREEN

The main screen allows for complete control and monitoring of generator operation; the other screens provide more detailed information.

The main screen shows the voltage and frequency of the generating set, the load connected and the following diesel engine measurements:

- Working hours counter.
- Cooling liquid temperature.
- Fuel level.
- Battery voltage.
- Electronic battery charger current.
- Oil pressure.
- Diesel engine speed.

AUT-MP12DR for automatic generators triggered by an external start-up signal.

This external start-up signal normally comes from a switching control unit such as the CON-2000MP, which detects the mains failure.
The switching control equipment is normally mounted in the switch cabinet.
It can be used with any type of switching mechanism and must be used when switching is done by means of automatic motorized switches.
This type of control panel should also be used when there is more than one switch and independent control of each one is desired.

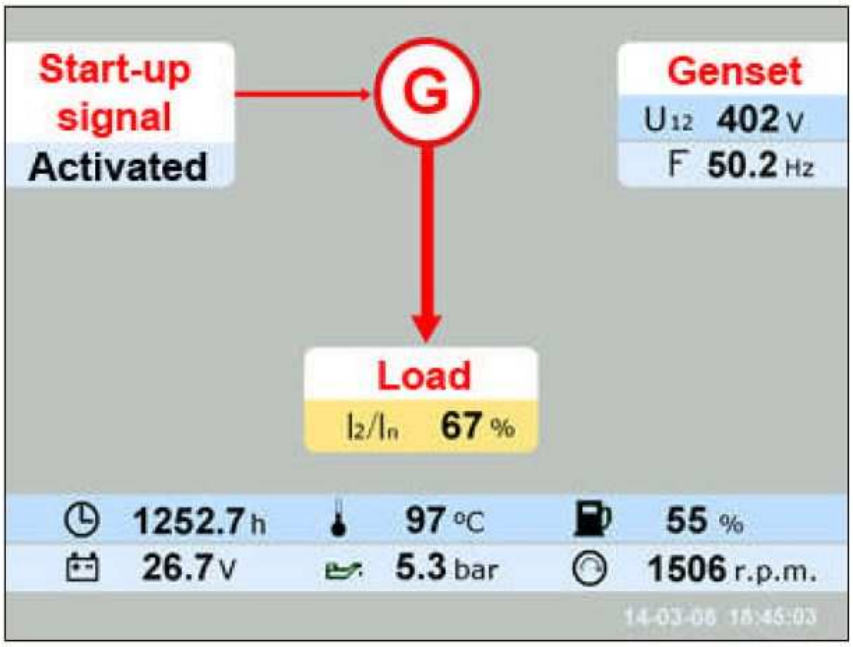

Main screen of the AUT-MP12DR control panel

Electra Molins
GRUPOS ELECTRÓGENOS

GRAN VÍA STREET, 434 – 08015 BARCELONA - SPAIN
TEL. +034 93 289 25 40
www.electramolins.es

DATASHEET FOR MP12 – CONXX12 SERIES HARDWARE

Supply:

1 Input 12V / 24V – 700mA. Range 10 … 32Vdc.

Analogue Inputs:

2 Voltage inputs 3-Phase 400Vac. Galvanically isolated. Range 190 ... 480 Vac. Consumption < 0,25VA.
2 Current inputs 3-Phase 5Aac. Galvanically isolated. Range 1 ... 6 Vac. Consumption < 0,25VA .
Overcurrent: 4xIn Constant. 20xIn 1 sec.
2 Voltage inputs 24Vdc. Range 10 … 32Vdc.
1 Current input 4Adc. Range 0,01 … 4 Adc.
3 Resistive inputs for VDO engine sensors. Range 30 … 220 Ω.
1 Resistive inputs for fuel sensor. Range 0 … 20 kΩ.

Analogue outputs:

1 Voltage output. Range 0 … 10V. Imax: 20mA.

Digital inputs:

14 Optocoupled inputs with 1 common. Range 8 ... 32V. Internal resistance 3k3 Ω.
4 Optocoupled inputs with independent common. Range 8 ... 32V. Internal resistance 3k3 Ω.

Digital outputs:

2 Optocoupled outputs. Range 10 … 32Vdc. Imax: 50mA.
8 Free voltage contact outputs. Rated current 12Aac / 0,3Adc. Rated voltage: 250Vac / 250Vdc.
8 Free voltage contact outputs. Rated current 6Aac / 0,3Adc. Rated voltage: 250Vac / 250Vdc.

Communications:

1 Serial port RS-485 protocol ModBus/Rtu. Slave.
1 Serial port RS-232 protocol ModBus/Rtu. Master /Slave.
1 Serial port CAN protocol J1939. Communication with diesel engines.
1 Serial port CAN protocol EM12. Communication between controllers.
1 Serial port Ethernet 10/100MB, Protocol SNMP, SNTP, TCP/IP.
1 Serial port USB type B. Controller programming.

Event log:

Event log referenced to internal clock and calendar. Not resettable by operator.

Internal clock and calendar:

Clock format: Hours-minutes-seconds. 24h.
Calendar format: Day-month-year.
Not resettables by operator.

Genset operating hours counter (Only MP12 controllers):

Range: 0 to 99999.9 h.
Accuracy: 0,1h.
Not resettable by operator.

Enviromental conditions:

Temperature: -30 .. 70ºC.
Humity: 95% @ 40ºC.

Dimensions and weight:

288x144x72mm (WxHxB). 1,95kg.

ABENER TEYMA MOJAVE

LETTER OF TRANSMITTAL

Date: April 20, 2014
Subject: Mojave Solar Project (09-AFC-5C)
Condition Number: AQ-43
Description: **Non-resettable hour meter for diesel fueled emergency generator engines, each driving a fire suppression water pump.**
Submittal No.: AQ-43 -00-00

To: Mr. Chris Anderson
Mojave Desert Air Quality Management District.

WE ARE SENDING YOU

☒ Attached

Document Name	Title	REV
AQ-43-00-00 Technical Memo		
SPECIFICATIONS	Non-resettable hour meter for diesel fueled emergency generator engines, each driving a fire suppression water pump.	NA

THESE ARE TRANSMITTED as checked below:

☒ For Approval

REMARKS _____

COPY TO: File SIGNED BY: _____

Vernon D. Leeming
Permitting Engineer
ABEINSA EPC

ABENER TEYMA MOJAVE

Technical Memo

Date:	April 20, 2014
Subject:	Mojave Solar Project (09-AFC-5C)
Condition Number:	AQ-43
Description:	**Non-resettable hour meter for diesel fueled emergency generator engines, each driving a fire suppression water pump.**
Submittal No.:	AQ-43 -00-00

Mr. Chris Anderson
Mojave Desert Air Quality Management District.
Permitting Department
14306 Park Ave
Victorville CA 92392
canderson@mdaqmd.ca.gov

Dear Mr. Anderson,

In compliance with AQ-43 we are submitting the specifications for the Non-resettable hour meter for the diesel fueled emergency generator engines, each driving a fire suppression water pump.

For your convenience, we are including the Compliance language below:

EQUIPMENT DESCRIPTION
Two - 346 HP diesel fueled emergency generator engines, each driving a fire suppression water pump.

AQ-43 A non-resettable hour meter with a minimum display capability of 9,999 hours shall be installed and maintained on this unit to indicate elapsed engine operating time. (Title 17 CCR §93115.10(e)(1)).

Verification: At least thirty (30) days prior to the installation of the engine, the project owner shall provide the District and the CPM the specification of the hour timer.

Should you have any questions or comments, please don't hesitate to contact me.

COPY TO: File

SIGNED BY:

Vernon D. Leeming
Permitting Engineer
ABEINSA EPC

CLARKE

Fire Protection Products, Inc.

Specifications-Non-resettable hour meter for diesel fueled emergency generator engines, each driving a fire suppression water pump.

Non-Resettable Hour Meter

All Clarke UL Listed/FM Approved diesel fire pump drivers are provided with a non-resettable hour meter. The hour meter can be found or can be accessed from the engine instrument panel as detailed below.

For all JU4, JU6, and JW6 model mechanical engines, the non-resettable hour meter is integrated with the tachometer.

CLARKE
Fire Protection Products, Inc.

For all JU4H-UFAD, JU6H-UFAD, JW6H-UFAD and JX6H-UFAD model electronic engines the non-resettable hour meter is captured in both the primary and alternate engine ECM. To capture the total number of hours of operation, refer to the following steps to obtain the hours from each ECM and then combine them together.

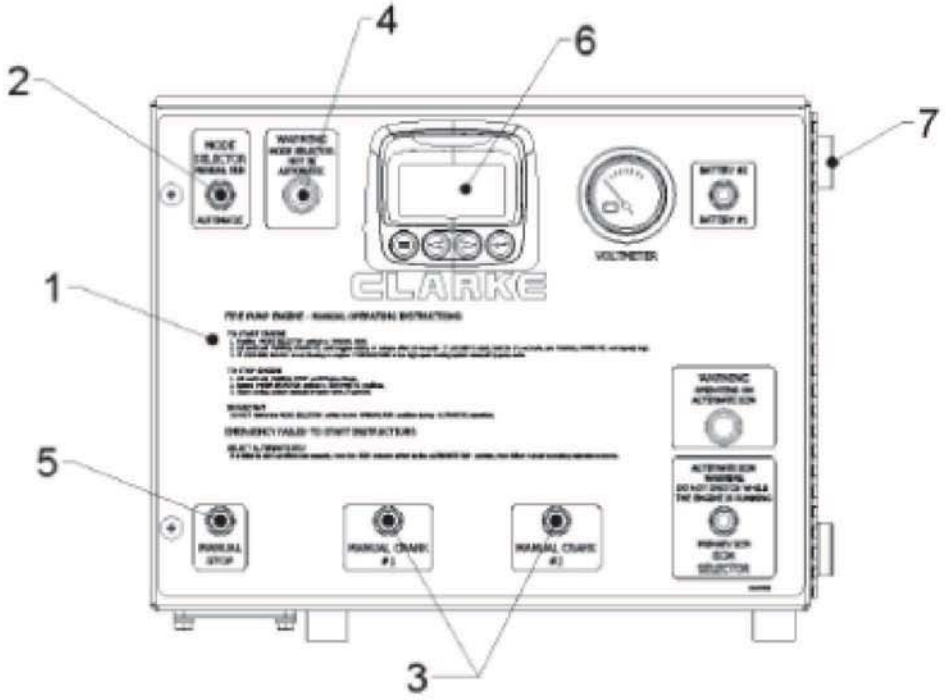

1) Set the ECM Selector switch to the Primary ECM.

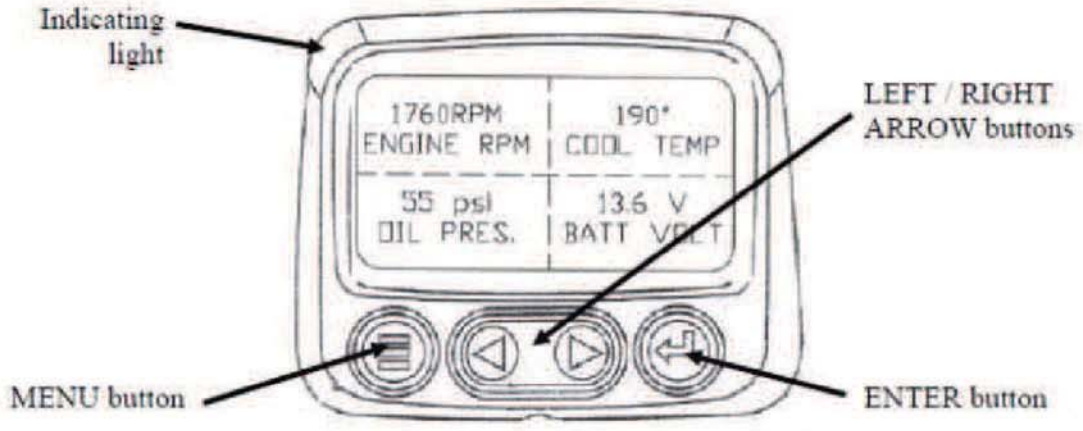

2) From the default “HOME” screen, press the MENU button.

3) Using the LEFT and RIGHT ARROW buttons, scroll until to reach GO TO 1-UP DISPLAY. Press the ENTER button.

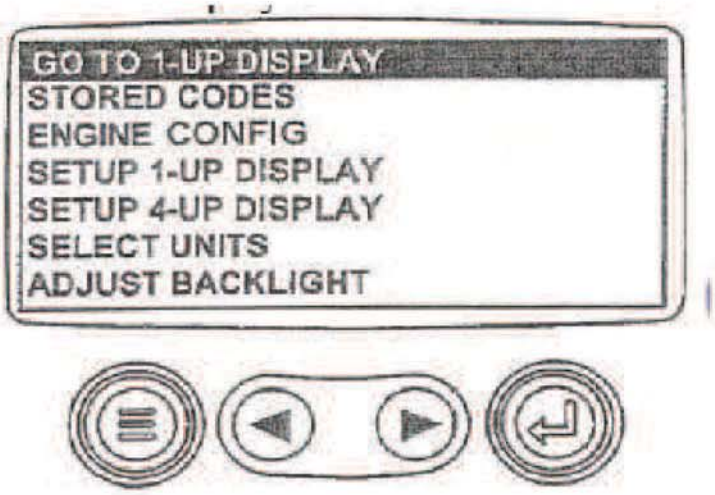

4) Using the LEFT and RIGHT ARROW buttons, scroll until to reach ENG HOURS. Record this amount of operating hours for the Primary ECM.
5) Without changing the display screen, position the ECM Selector Switch to the Alternate ECM. The ENG HOURS value should update to reflect the operating hours for the Alternate ECM. Record this value and add it to the Primary ECM to reflect the total non-resetting operating hours.

In addition to the all the instructions above, the following considerations should be made:

- If a Tachometer/Hour Meter is replaced for any reason, the operating hours should be recorded to maintain a log of total operating hours.
- The MACHINE HOURS reading on the LCD display provided on all JU4H-UFAD, JU6H-UFAD, JW6H-UFAD and JX6H-UFAD model engines is a representation of total operating hours (including operating hours on both ECMs), however, it is possible to reset this value via the Utility menu.
- If an ECM is replaced or reprogrammed for any reason the operating hours should be recorded to maintain a log of total operating hours.

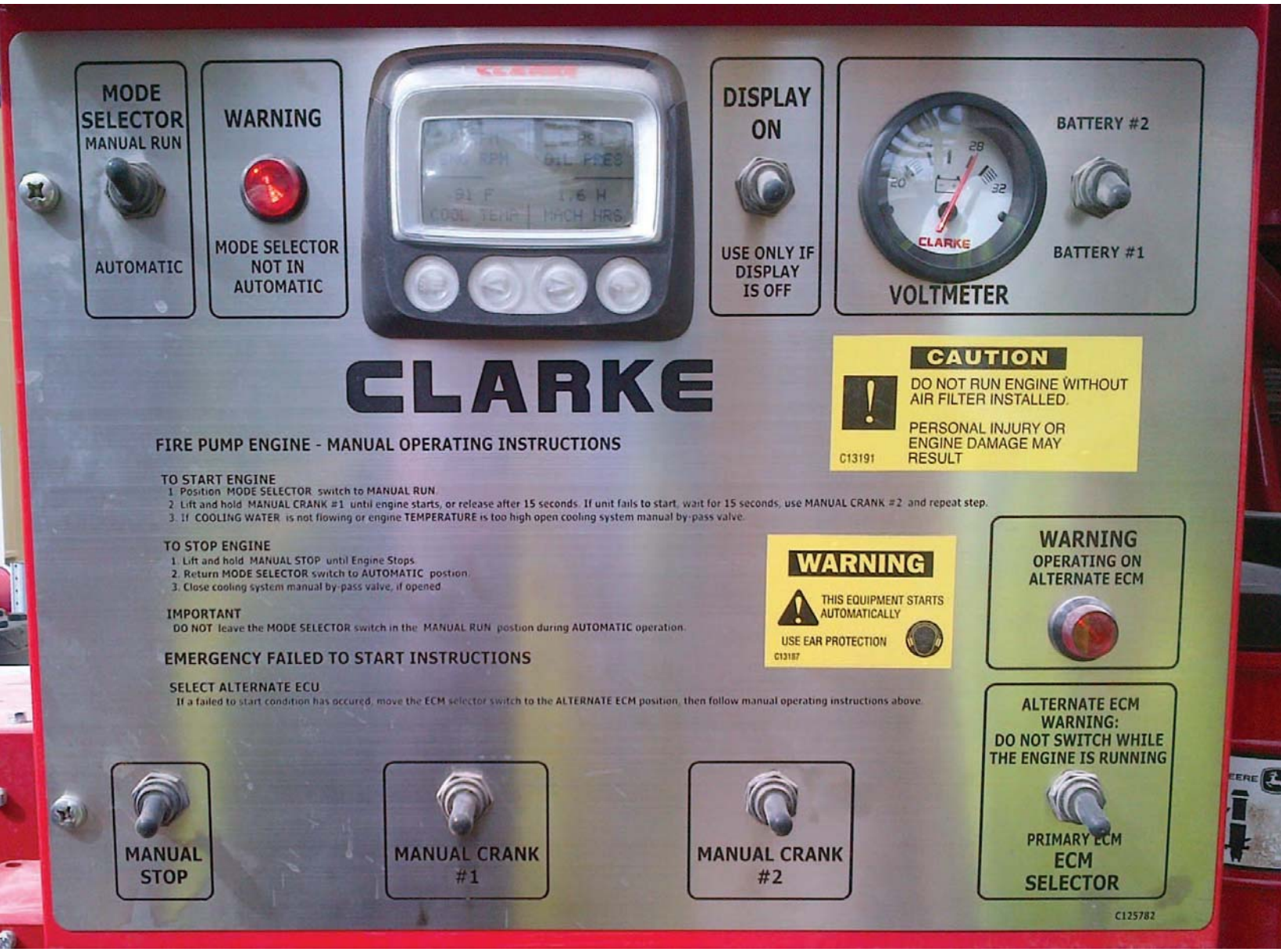
MODE SELECTOR
MANUAL RUN
AUTOMATIC
WARNING
MODE SELECTOR NOT IN AUTOMATIC
DISPLAY ON
USE ONLY IF DISPLAY IS OFF
BATTERY #2
BATTERY #1
VOLTMETER
CLARKE
CAUTION
DO NOT RUN ENGINE WITHOUT AIR FILTER INSTALLED.
PERSONAL INJURY OR ENGINE DAMAGE MAY RESULT
C13191
FIRE PUMP ENGINE - MANUAL OPERATING INSTRUCTIONS
TO START ENGINE
1. Position MODE SELECTOR switch to MANUAL RUN.
2. Lift and hold MANUAL CRANK #1 until engine starts, or release after 15 seconds. If unit fails to start, wait for 15 seconds, use MANUAL CRANK #2 and repeat step.
3. If COOLING WATER is not flowing or engine TEMPERATURE is too high open cooling system manual by-pass valve.
TO STOP ENGINE
1. Lift and hold MANUAL STOP until Engine Stops.
2. Return MODE SELECTOR switch to AUTOMATIC postion.
3. Close cooling system manual by-pass valve, if opened.
IMPORTANT
DO NOT leave the MODE SELECTOR switch in the MANUAL RUN postion during AUTOMATIC operation.
EMERGENCY FAILED TO START INSTRUCTIONS
SELECT ALTERNATE ECU
If a failed to start condition has occured, move the ECM selector switch to the ALTERNATE ECM position, then follow manual operating instructions above.
WARNING
THIS EQUIPMENT STARTS AUTOMATICALLY
USE EAR PROTECTION
C13187
WARNING
OPERATING ON ALTERNATE ECM
ALTERNATE ECM WARNING:
DO NOT SWITCH WHILE THE ENGINE IS RUNNING
PRIMARY ECM
ECM SELECTOR
MANUAL STOP
MANUAL CRANK #1
MANUAL CRANK #2
C125782

ABENER TEYMA MOJAVE

LETTER OF TRANSMITTAL

Date: April 20, 2014
Subject: Mojave Solar Project (09-AFC-5C)
Condition Number: AQ-43
Description: **Non-resettable hour meter for diesel fueled emergency generator engines, each driving a fire suppression water pump.**
Submittal No.: AQ-43 -00-00
To: Mr. Dale Rundquist, CPM
California Energy Commission

WE ARE SENDING YOU

☒ Attached

Document Name	Title	REV
AQ-43-00-00 Technical Memo		
SPECIFICATIONS	Non-resettable hour meter for diesel fueled emergency generator engines, each driving a fire suppression water pump.	NA

THESE ARE TRANSMITTED as checked below:

☒ For Approval

REMARKS

COPY TO: File

SIGNED BY:

Vernon D. Leeming
Permitting Engineer
ABEINSA EPC

ABENER TEYMA MOJAVE

Technical Memo

Date:	April 20, 2014
Subject:	Mojave Solar Project (09-AFC-5C)
Condition Number:	AQ-43
Description:	**Non-resettable hour meter for diesel fueled emergency generator engines, each driving a fire suppression water pump.**
Submittal No.:	AQ-43 -00-00

Mr. Dale Rundquist, CPM
California Energy Commission
1516 Ninth Street (MS-2000)
Sacramento, CA 95814
DRundquist@energy.state.ca.us

Dear Mr. Rundquist,

In compliance with AQ-43 we are submitting the specifications for the Non-resettable hour meter for the diesel fueled emergency generator engines, each driving a fire suppression water pump.

For your convenience, we are including the Compliance language below:

EQUIPMENT DESCRIPTION
Two - 346 HP diesel fueled emergency generator engines, each driving a fire suppression water pump.

AQ-43 A non-resettable hour meter with a minimum display capability of 9,999 hours shall be installed and maintained on this unit to indicate elapsed engine operating time. (Title 17 CCR §93115.10(e)(1)).

Verification: At least thirty (30) days prior to the installation of the engine, the project owner shall provide the District and the CPM the specification of the hour timer.

Should you have any questions or comments, please don't hesitate to contact me.

COPY TO: File

SIGNED BY:

Vernon D. Leeming
Permitting Engineer
ABEINSA EPC

CLARKE

Fire Protection Products, Inc.

Specifications-Non-resettable hour meter for diesel fueled emergency generator engines, each driving a fire suppression water pump.

Non-Resettable Hour Meter

All Clarke UL Listed/FM Approved diesel fire pump drivers are provided with a non-resettable hour meter. The hour meter can be found or can be accessed from the engine instrument panel as detailed below.

For all JU4, JU6, and JW6 model mechanical engines, the non-resettable hour meter is integrated with the tachometer.

CLARKE
Fire Protection Products, Inc.

For all JU4H-UFAD, JU6H-UFAD, JW6H-UFAD and JX6H-UFAD model electronic engines the non-resettable hour meter is captured in both the primary and alternate engine ECM. To capture the total number of hours of operation, refer to the following steps to obtain the hours from each ECM and then combine them together.

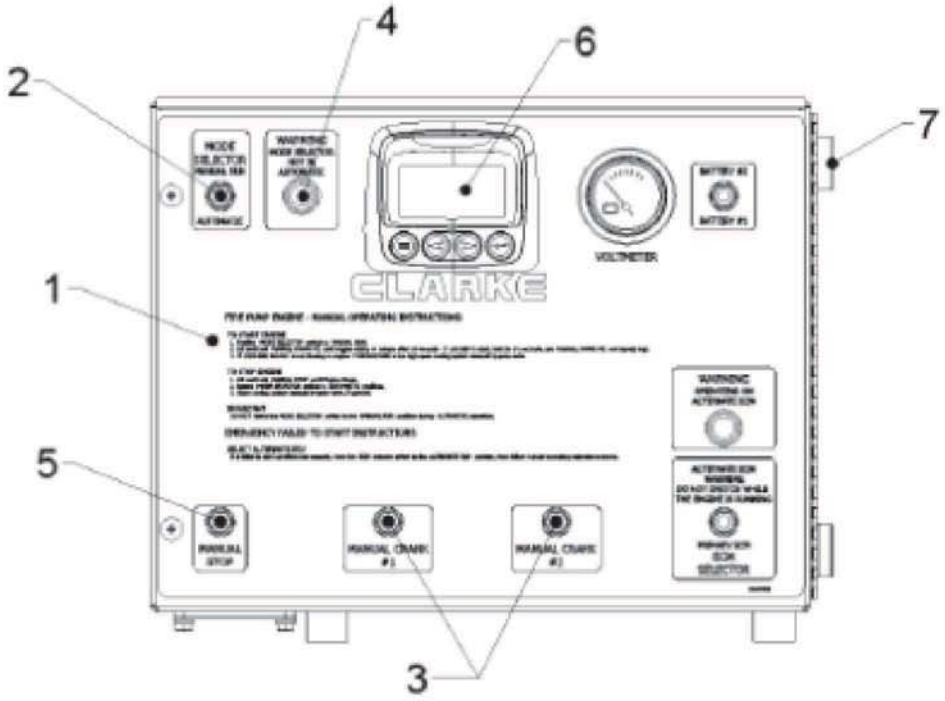

1) Set the ECM Selector switch to the Primary ECM.

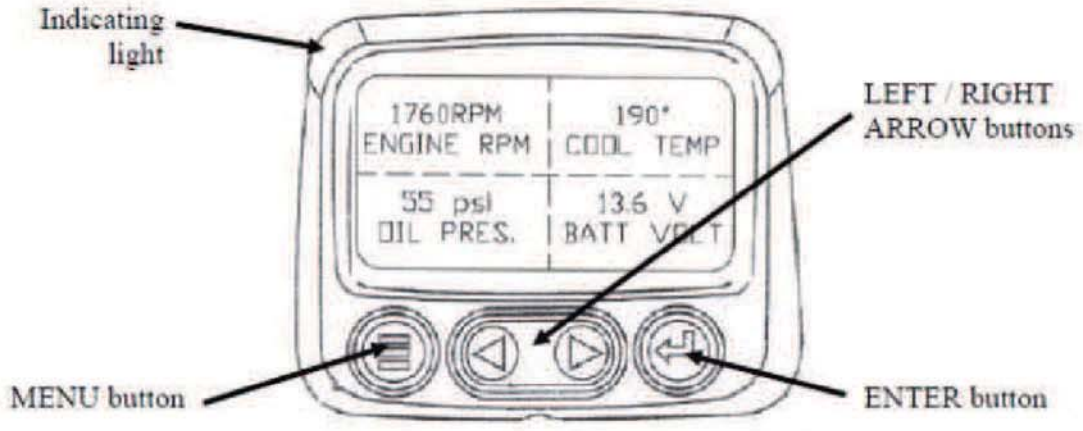

2) From the default “HOME” screen, press the MENU button.

3) Using the LEFT and RIGHT ARROW buttons, scroll until to reach GO TO 1-UP DISPLAY. Press the ENTER button.

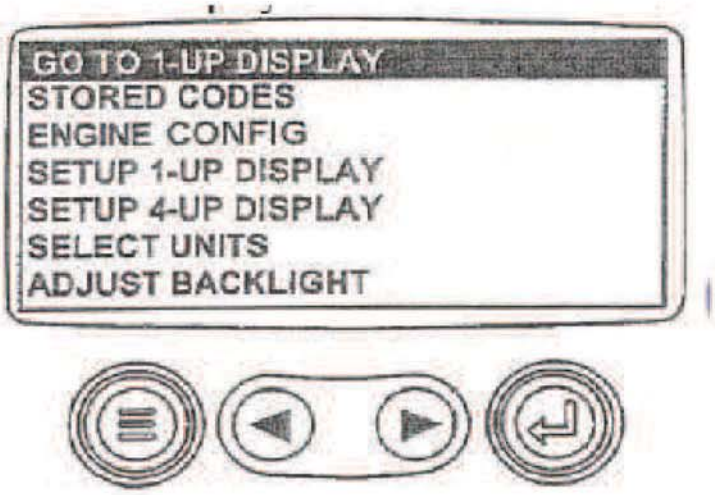

4) Using the LEFT and RIGHT ARROW buttons, scroll until to reach ENG HOURS. Record this amount of operating hours for the Primary ECM.
5) Without changing the display screen, position the ECM Selector Switch to the Alternate ECM. The ENG HOURS value should update to reflect the operating hours for the Alternate ECM. Record this value and add it to the Primary ECM to reflect the total non-resetting operating hours.

In addition to the all the instructions above, the following considerations should be made:

- If a Tachometer/Hour Meter is replaced for any reason, the operating hours should be recorded to maintain a log of total operating hours.
- The MACHINE HOURS reading on the LCD display provided on all JU4H-UFAD, JU6H-UFAD, JW6H-UFAD and JX6H-UFAD model engines is a representation of total operating hours (including operating hours on both ECMs), however, it is possible to reset this value via the Utility menu.
- If an ECM is replaced or reprogrammed for any reason the operating hours should be recorded to maintain a log of total operating hours.

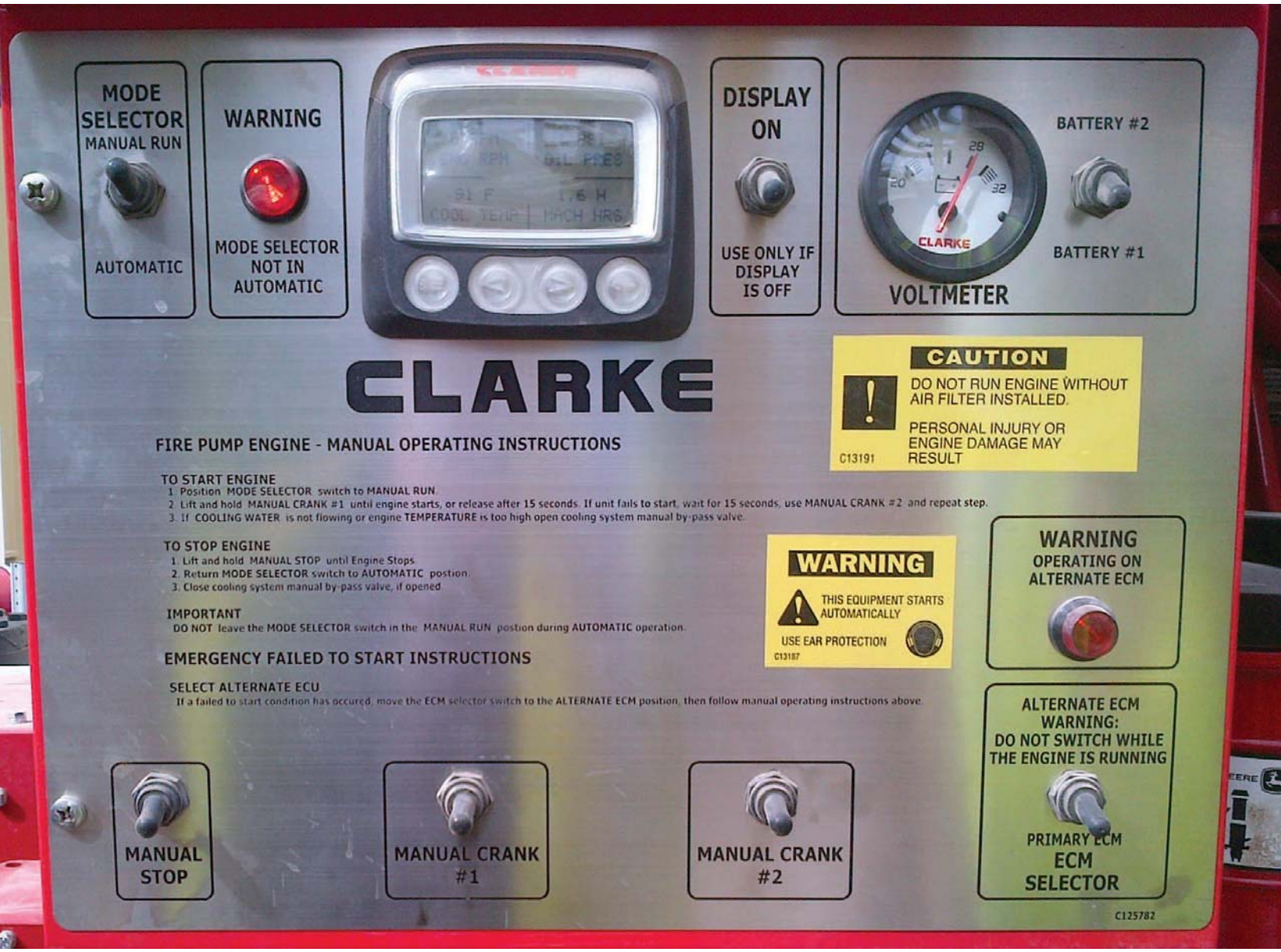
MODE SELECTOR
MANUAL RUN
AUTOMATIC
WARNING
MODE SELECTOR NOT IN AUTOMATIC
DISPLAY ON
USE ONLY IF DISPLAY IS OFF
BATTERY #2
BATTERY #1
VOLTMETER
CLARKE
CAUTION
DO NOT RUN ENGINE WITHOUT AIR FILTER INSTALLED.
PERSONAL INJURY OR ENGINE DAMAGE MAY RESULT
C13191
FIRE PUMP ENGINE - MANUAL OPERATING INSTRUCTIONS
TO START ENGINE
1. Position MODE SELECTOR switch to MANUAL RUN.
2. Lift and hold MANUAL CRANK #1 until engine starts, or release after 15 seconds. If unit fails to start, wait for 15 seconds, use MANUAL CRANK #2 and repeat step.
3. If COOLING WATER is not flowing or engine TEMPERATURE is too high open cooling system manual by-pass valve.
TO STOP ENGINE
1. Lift and hold MANUAL STOP until Engine Stops.
2. Return MODE SELECTOR switch to AUTOMATIC postion.
3. Close cooling system manual by-pass valve, if opened.
IMPORTANT
DO NOT leave the MODE SELECTOR switch in the MANUAL RUN postion during AUTOMATIC operation.
EMERGENCY FAILED TO START INSTRUCTIONS
SELECT ALTERNATE ECU
If a failed to start condition has occured, move the ECM selector switch to the ALTERNATE ECM position, then follow manual operating instructions above.
WARNING
THIS EQUIPMENT STARTS AUTOMATICALLY
USE EAR PROTECTION
C13187
WARNING
OPERATING ON ALTERNATE ECM
ALTERNATE ECM WARNING:
DO NOT SWITCH WHILE THE ENGINE IS RUNNING
PRIMARY ECM
ECM SELECTOR
MANUAL STOP
MANUAL CRANK #1
MANUAL CRANK #2
C125782

Hazardous Materials Management Appendix A
Hazardous Materials Proposed for Use at AMS During Operations
Revision - 04-30-14

S No.	Application	Hazardous Characteristics	Maximum Quantity on Site	CERCLA SARA RQ
-38-9	Generator Purging	Asphyxiant	3136 Cu ft	NA
-38-9	Water Treatment	Cryogenic	13000 gallons	NA
92-9	System Cleaning	Irritant	9420 gallons	NA
2-00-0	System Cleaning	Oxidizer	8200 lbs	Yes
6-45-9	System Cleaning	Irritant	440 gallons	NA
6-21-6	System Cleaning	Corrosive	8840 gallons	NA
0-73-2	System Cleaning	Corrosive	2360 gallons	Yes
-21-1	System Cleaning	Irritant	240 gallons	NA

BECK OIL, INC

WETHOSE SHEET

CUSTOMER: ABENER / CONSTRUCTION TRUCK #: 35

DATE: 5/2/14 DRIVER: Larry Burgess

(CIRCLE ONE)

PRODUCT: RED DIESEL CLEAR DIESEL REGULAR GAS

		UNIT NUMBER	DESCRIPTION		GALLONS	
DIESEL	1	#408	ALPHA	SUB 101		
"	2	# 7716723	ALPHA	SUB102		
"	3	#516	A/W	OFFICE GEN.		
"	4		ALPHA	SOUTH CELL	89 ✓	*
"	5	#K249	ALPHA	SWITCHYARD	78 ✓	*
"	6	#10063822	ALPHA	BLDG #16	43 ✓	*
"	7	#10095616 9	ALPHA	"	196 ✓	*
"	8	#1182373	ALPHA	"	84 ✓	*
"	9	#1205871	ALPHA	P.B. GEN		
"	10	#10082386	TAB	GUARD SHACK		
"	11	#10155816 2	TAB	SUB 105		
"	12	#10060992	BETA	SUB 102		
"	13	#1109531	BETA	SUB 107		
"	14	#1112708	BETA	SUB 108		
"	15	#10173927	BETA	SUB109		
"	16	#10058215	BETA	BLDG #10	52 ✓	*
"	17	#1009 8365	BETA	BLDG #10	FULL	*
"	18	#10155219	BETA	BLDG #10	20 ✓	*
"	19	#K272	BETA	SWITCHYARD	35 ✓	*
"	20	#10167339	BETA	P.B GEN		
				TOTAL DIESEL GALLONS:	904	
				REGULAR GAS GALLONS:	99	

MASTER METER: _____ START: _____ FINISH: _____ TOTAL: _____

BECK OIL INC
16640 D STREET
VICTORVILLE, CA 92395
760) 245-4191

NOTE: BILLING BASED ON MASTER METER

Totalizer Diesel
start 2905299

Finish 2974679

JAMIE PAGE 02/03/12

2:15 dc

BECK OIL, INC

WETHOSE SHEET

CUSTOMER: ABENER / CONSTRUCTION TRUCK #: _____

DATE: _____ DRIVER: _____

(CIRCLE ONE)

PRODUCT: RED DIESEL CLEAR DIESEL REGULAR GAS

	UNIT NUMBER		DESCRIPTION		GALLONS
DIESEL		BETA	SOUTH FUEL CELL		46
BT 2			FUEL TRUCK TO TRANSFER TANK		99
Red 3			TRANSFER TANK		268
87 4		BETA	SOUTH FUEL CELL		
5					
6					
7					
8					
9					
10					
11					
12					
13					
14					
15					
16					
17					
18					
19					
20					
			TOTAL DIESEL GALLONS:		
			REGULAR GAS GALLONS:		

* * *

OK FULL

MASTER METER: _____ START: _____ FINISH: _____ TOTAL: _____

BECK OIL INC
16640 D STREET
VICTORVILLE, CA 92395
760) 245-4191

NOTE: BILLING BASED ON MASTER METER

JAMIE PAGE 02/03/12

BECK OIL, INC

WETHOSE SHEET

CUSTOMER: ABENER / CONSTRUCTION TRUCK #: 31

DATE: 5-6-14 DRIVER: Rhino

(CIRCLE ONE)

PRODUCT: RED DIESEL CLEAR DIESEL REGULAR GAS

		UNIT NUMBER		DESCRIPTION		GALLONS
DIESEL	1	#408	ALPHA	SUB 101		
"	2	#1716723	ALPHA	SUB102		
"	3	#516	A/N	OFFICE GEN.		
"	4		ALPHA	SOUTH CELL		179
"	5	#K249	ALPHA	SWITCHYARD		
"	6	#10063822	ALPHA	BLDG #16		52
"	7	#10095669	ALPHA	"		173
"	8	#1162373	ALPHA	10073037		135
"	9	#1205871	ALPHA	P.B. GEN		661
"	10	#10082386	TAB	GUARD SHACK		
"	11	#10155862	TAB	SUB 105		
"	12	#10060992	BETA	SUB 106		
"	13	#1109531	BETA	SUB 107		
"	14	#1112708	BETA	SUB 108		
"	15	#10173927	BETA	SUB109		
"	16	#10058215	BETA	BLDG #16		
"	17	#10098365	BETA	BLDG #10		
"	18	#10155219	BETA	BLDG #10		
"	19	#K272	BETA	SWITCHYARD		112
"	20	#10167339	BETA	P.B. GEN		
				TOTAL DIESEL GALLONS:		1707
				REGULAR GAS GALLONS:		128

MASTER METER: _____ START: _____ FINISH: _____ TOTAL: _____

BECK OIL INC
16640 D STREET
VICTORVILLE, CA 92395
760) 245-4191

NOTE: BILLING BASED ON MASTER METER

BECK OIL, INC

WETHOSE SHEET

CUSTOMER: ABENER / CONSTRUCTION TRUCK #: _____

DATE: _____ DRIVER: _____

(CIRCLE ONE)

PRODUCT: RED DIESEL CLEAR DIESEL REGULAR GAS

	UNIT NUMBER		DESCRIPTION		GALLONS
DIESEL		BETA	SOUTH FUEL CELL		78
87 2			FUEL TRUCK + TRANSFER TANK		128
Red 3			TRANSFER TANK		
87 4		BETA	SOUTH FUEL CELL		
5			Layne's Water Pump		217
6					
7					
8					
9					
10					
11					
12					
13					
14					
15					
16					
17					
18					
19					
20					
			TOTAL DIESEL GALLONS:		
			REGULAR GAS GALLONS:		

(87) gas

MASTER METER: _____ START: _____ FINISH: _____ TOTAL: _____

BECK OIL INC
16640 D STREET
VICTORVILLE, CA 92395
760) 245-4191

NOTE: BILLING BASED ON MASTER METER

JAMIE PAGE 02/03/12

BECK OIL, INC

WETHOSE SHEET

CUSTOMER: ABENER / CONSTRUCTION TRUCK #: 31

DATE: 5-9-2014 DRIVER: Larry

(CIRCLE ONE)

PRODUCT: RED DIESEL CLEAR DIESEL REGULAR GAS

		UNIT NUMBER		DESCRIPTION		GALLONS
DIESEL	1	#408	ALPHA	SUB 101		
"	2	# 7716723	ALPHA	SUB102		
"	3	#516	A/W	OFFICE GEN.		
"	4		ALPHA	SOUTH CELL		149
"	5	#K249	ALPHA	SWITCHYARD		88
"	6	#10063822	ALPHA	BLDG #10		44
"	7	#10095666	ALPHA	"		217
"	8	~~#62373~~	ALPHA	10073037		76
"	9	#1205871	ALPHA	P.B. GEN		
"	10	#10082386	TAB	GUARD SHACK		58
"	11	#10155866	TAB	SUB 105		
"	12	#10060992	BETA	SUB 106		
"	13	#1109531	BETA	SUB 107		
"	14	#1112708	BETA	SUB 108		
"	15	#10173927	BETA	SUB109		
"	16	#10058215	BETA	BLDG #10		
"	17	#10098365	BETA	BLDG #10		
"	18	#10155219	BETA	BLDG #10		
"	19	#K272	BETA	SWITCHYARD		76
"	20	#10117339	BETA	P.B GEN		

TOTAL DIESEL GALLONS: 778

REGULAR GAS GALLONS: 72

MASTER METER: _____ START: _____ FINISH: _____ TOTAL: _____

BECK OIL INC
16640 D STREET
VICTORVILLE, CA 92395
760) 245-4191

NOTE: BILLING BASED ON MASTER METER

JAMIE PAGE 02/03/12

BECK OIL, INC

WETHOSE SHEET

CUSTOMER: ABENER / CONSTRUCTION TRUCK #: #31

DATE: 5-9-2014 DRIVER: Larry

(CIRCLE ONE)

PRODUCT: RED DIESEL CLEAR DIESEL REGULAR GAS

	UNIT NUMBER		DESCRIPTION		GALLONS
DIESEL		BETA	SOUTH FUEL CELL		70
87 2			FUEL TRUCK TO TRANSFER TANK		72
RED 3			TRANSFER TANK		
87 4		BETA	SOUTH FUEL CELL		
5					
6					
7					
8					
9					
10					
11					
12					
13					
14					
15					
16					
17					
18					
19					
20					
			TOTAL DIESEL GALLONS:		
			REGULAR GAS GALLONS:		

MASTER METER: _____ START: _____ FINISH: _____ TOTAL: _____

BECK OIL INC
16640 D STREET
VICTORVILLE, CA 92395
760) 245-4191

NOTE: BILLING BASED ON MASTER METER

JAMIE PAGE 02/03/12

BECK OIL, INC

WETHOSE SHEET

CUSTOMER: ABENER / CONSTRUCTION TRUCK #: 35

DATE: 5-13-14 DRIVER: Larry

(CIRCLE ONE)

PRODUCT: RED DIESEL CLEAR DIESEL REGULAR GAS

	UNIT NUMBER		DESCRIPTION		GALLONS
DIESEL 1	#408	ALPHA	SUB 101		
" 2	# 7716723	ALPHA	SUB102		
" 3	#5116	A/W	OFFICE GEN.		
" 4		ALPHA	SOUTH CELL		139
" 5	#K 249	ALPHA	SWITCHYARD		114
" 6	#10063822	ALPHA	BLDG #10		56
" 7	#10095669	ALPHA	"		197
" 8	# ~~1182373~~	ALPHA	10073037		109
" 9	#1205871	ALPHA	P.B. GEN		
" 10	#10082386	TAB	GUARD SHACK		
" 11	#10155862	TAB	SUB 105		
" 12	#10060992	BETA	SUB 106		
" 13	#1109531	BETA	SUB 107		
" 14	#1112708	BETA	SUB 108		
" 15	#10173927	BETA	SUB109		
" 16	#10058215	BETA	BLDG #10		59
" 17	#10098365	BETA	BLDG #10		164
" 18	#10155219	BETA	BLDG #10		89
" 19	#K272	BETA	SWITCHYARD		114
" 20	#10167339	BETA	P.B GEN		11
			TOTAL DIESEL GALLONS:		1123
			REGULAR GAS GALLONS:		68

MASTER METER: _____ START: _____ FINISH: _____ TOTAL: _____

BECK OIL INC
16640 D STREET
VICTORVILLE, CA 92395
760) 245-4191

NOTE: BILLING BASED ON MASTER METER

JAMIE PAGE 02/03/12

BECK OIL, INC

WETHOSE SHEET

CUSTOMER: ABENER / CONSTRUCTION TRUCK #: _____

DATE: _____ DRIVER: _____

(CIRCLE ONE)

PRODUCT: RED DIESEL CLEAR DIESEL REGULAR GAS

	UNIT NUMBER		DESCRIPTION		GALLONS
DIESEL		BETA	SOUTH FUEL CELL		91
87 2			FUEL TRUCK + TRANSFER TANK		68
RED 3			TRANSFER TANK		
87 4		BETA	SOUTH FUEL CELL		
5					
6					
7					
8					
9					
10					
11					
12					
13					
14					
15					
16					
17					
18					
19					
20					
			TOTAL DIESEL GALLONS:		
			REGULAR GAS GALLONS:		

MASTER METER: _____ START: _____ FINISH: _____ TOTAL: _____

BECK OIL INC
16640 D STREET
VICTORVILLE, CA 92395
760) 245-4191

NOTE: BILLING BASED ON MASTER METER

JAMIE PAGE 02/03/12

BECK OIL, INC

WETHOSE SHEET

CUSTOMER: ABENER / CONSTRUCTION TRUCK #: 31

DATE: 5-16-14 DRIVER: Rhino

(CIRCLE ONE)

PRODUCT: RED DIESEL CLEAR DIESEL REGULAR GAS

	UNIT NUMBER		DESCRIPTION		GALLONS
Diesel		BETA	SOUTH FUEL CELL		118
87 2			FUEL TRUCK & TRANSFER TANK		85
Red 3			TRANSFER TANK		92
87 4		BETA	SOUTH FUEL CELL		
5					
6					
7					
8					
9					
10					
11					
12					
13					
14					
15					
16					
17					
18					
19					
20					
			TOTAL DIESEL GALLONS:		1263
			REGULAR GAS GALLONS:		85

MASTER METER: _____ START: _____ FINISH: _____ TOTAL: _____

BECK OIL INC
16640 D STREET
VICTORVILLE, CA 92395
760) 245-4191

NOTE: BILLING BASED ON MASTER METER

BECK OIL, INC

WETHOSE SHEET

CUSTOMER: ABENER / CONSTRUCTION TRUCK #: _____

DATE: _____ DRIVER: _____

(CIRCLE ONE)

PRODUCT: RED DIESEL CLEAR DIESEL REGULAR GAS

		UNIT NUMBER		DESCRIPTION		GALLONS
DIESEL	1	#408	ALPHA	SUB 101		
"	2	# 7716723	ALPHA	SUB102		
"	3	#516	A/W	OFFICE GEN.		
"	4		ALPHA	SOUTH CELL		187
"	5	#K 249	ALPHA	SWITCHYARD		110
"	6	#10063822	ALPHA	BLDG #16		41
"	7	#10095669	ALPHA	"		139
"	8	~~#1025~~	ALPHA	10073037		77
"	9	#1205871	ALPHA	P.B. GEN		
"	10	#10082386	TAB	GUARD SHACK		39
"	11	#10155862	TAB	SUB 105		
"	12	#10060992	BETA	SUB 106		
"	13	#1109531	BETA	SUB 107		
"	14	#1112708	BETA	SUB 108		
"	15	#10173927	BETA	SUB109		
"	16	#10058215	BETA	BLDG #10		89
"	17	#1009 83865	BETA	BLDG #10		124
"	18	#10155219	BETA	BLDG #10		87
"	19	#K272	BETA	SWITCHYARD		117
"	20	#10116 7339	BETA	P.B GEN		
				TOTAL DIESEL GALLONS:		
				REGULAR GAS GALLONS:		

MASTER METER: _____ START: _____ FINISH: _____ TOTAL: _____

BECK OIL INC
16640 D STREET
VICTORVILLE, CA 92395
760) 245-4191

NOTE: BILLING BASED ON MASTER METER

JAMIE PAGE 02/03/12

BECK OIL, INC

WETHOSE SHEET

CUSTOMER: ABENER / CONSTRUCTION TRUCK #: 133

DATE: 5-20-14 DRIVER: Larry (Harold)

(CIRCLE ONE)

PRODUCT: RED DIESEL CLEAR DIESEL REGULAR GAS

	UNIT NUMBER	DESCRIPTION		GALLONS
DIESEL 1	#408	ALPHA	SUB 101	17
" 2	# 771e723	ALPHA	SUB102	44
" 3	#511e	A/W	OFFICE GEN.	
" 4		ALPHA	SOUTH CELL	
" 5	#K 249	ALPHA	SWITCHYARD	106
" 6	#10016 3822	ALPHA	BLDG #16	55
" 7	#100956669	ALPHA	"	155
" 8	~~#460273~~	ALPHA	10083037	89
" 9	#12055871	ALPHA	P.B. GEN	
" 10	#10082386	TAB	G.YARD SHACK	
" 11	#10155462	TAB	SUB 105	
" 12	#10060992	BETA	SUB 106	
" 13	#1109521	BETA	SUB 107	
" 14	#1112708	BETA	SUB 108	
" 15	#10173927	BETA	SUB 109	
" 16	#10058215	BETA	BLDG #10	71
" 17	#1009 8316 5	BETA	BLDG #10	188
" 18	#10155219	BETA	BLDG #10	86
" 19	#K 272	BETA	SWITCHYARD	97
" 20	# 1011e7339	BETA	P.B GEN	
			TOTAL DIESEL GALLONS:	1500
			REGULAR GAS GALLONS:	102

MASTER METER: _____ START: _____ FINISH: _____ TOTAL: _____

BECK OIL INC
16640 D STREET
VICTORVILLE, CA 92395
760) 245-4191

NOTE: BILLING BASED ON MASTER METER

JAMIE PAGE 02/03/12

BECK OIL, INC

WETHOSE SHEET

CUSTOMER: ABENER / CONSTRUCTION TRUCK #: _____

DATE: _____ DRIVER: _____

(CIRCLE ONE)

PRODUCT: RED DIESEL CLEAR DIESEL REGULAR GAS

	UNIT NUMBER		DESCRIPTION		GALLONS
Diesel		Beta	South Fuel Cell		265
87 2			Fuel Truck + Transfer Tank		102
Red 3			Transfer Tank		32
87 4		Beta	South Fuel Cell		
5			Layne's Water Pump		200
6					
7					
8					
9					
10					
11					
12					
13					
14					
15					
16					
17					
18					
19					
20					
			TOTAL DIESEL GALLONS:		
			REGULAR GAS GALLONS:		

MASTER METER: _____ START: _____ FINISH: _____ TOTAL: _____

BECK OIL INC
16640 D STREET
VICTORVILLE, CA 92395
760) 245-4191

NOTE: BILLING BASED ON MASTER METER

JAMIE PAGE 02/03/12

BECK OIL, INC

WETHOSE SHEET

CUSTOMER: ABENER / CONSTRUCTION TRUCK #: 31

DATE: 5-23-14 DRIVER: Rhino

(CIRCLE ONE)

PRODUCT: RED DIESEL CLEAR DIESEL REGULAR GAS

	UNIT NUMBER		DESCRIPTION		GALLONS
DIESEL 1	#408	ALPHA	SUB 101		✓
" 2	#776723	ALPHA	SUB102		
" 3	#516	A/W	OFFICE GEN.		
" 4		ALPHA	SOUTH CELL		202
" 5	#K 249	ALPHA	SWITCHYARD		93
" 6	#10063822	ALPHA	BLDG #10		51
" 7	#10095669	ALPHA	"		228
" 8	~~#1180373~~	ALPHA	10073037		51
" 9	#1205871	ALPHA	P.B. GEN		
" 10	#10082386	TAB	GUARD SHACK		
" 11	#10155862	TAB	SUB 105		
" 12	#10060992	BETA	SUB 106		
" 13	#1109531	BETA	SUB 107		
" 14	#1112708	BETA	SUB 108		
" 15	#10173927	BETA	SUB109		
" 16	#10058215	BETA	BLDG #10		
" 17	#10098365	BETA	BLDG #10		23
" 18	#10155219	BETA	BLDG #10		32
" 19	#K272	BETA	SWITCHYARD		126
" 20	#10167339	BETA	P.B GEN		
			TOTAL DIESEL GALLONS:		753
			REGULAR GAS GALLONS:		89

MASTER METER: _____ START: _____ FINISH: _____ TOTAL: _____

BECK OIL INC
16640 D STREET
VICTORVILLE, CA 92395
760) 245-4191

NOTE: BILLING BASED ON MASTER METER

JAMIE PAGE 02/03/12

BECK OIL, INC

WETHOSE SHEET

CUSTOMER: ABENER / CONSTRUCTION TRUCK #: _____

DATE: _____ DRIVER: _____

(CIRCLE ONE)

PRODUCT: RED DIESEL CLEAR DIESEL REGULAR GAS

	UNIT NUMBER		DESCRIPTION		GALLONS
Diesel		Beth	South Fuel Cell		
987 4			Fuel Truck + Transfer Tank		89
Red 3			Transfer Tank		47
87 4		Beth	South Fuel Cell		
5					
6					
7					
8					
9					
10					
11					
12					
13					
14					
15					
16					
17					
18					
19					
20					
			TOTAL DIESEL GALLONS:		7
			REGULAR GAS GALLONS:		

MASTER METER: _____ START: _____ FINISH: _____ TOTAL: _____

BECK OIL INC
16640 D STREET
VICTORVILLE, CA 92395
760) 245-4191

NOTE: BILLING BASED ON MASTER METER

JAMIE PAGE 02/03/12

BECK OIL, INC

WETHOSE SHEET

CUSTOMER: ABENER / CONSTRUCTION TRUCK #: _____

DATE: 5-27-14 DRIVER: LARRY

(CIRCLE ONE)

PRODUCT: RED DIESEL CLEAR DIESEL REGULAR GAS

		UNIT NUMBER		DESCRIPTION		GALLONS
DIESEL	1	#408	ALPHA	SUB 101		
"	2	# 771e723	ALPHA	SUB102		
"	3	#511e	A/W	OFFICE GEN.		
"	4		ALPHA	SOUTH CELL		246
"	5	#K 249	ALPHA	SWITCHYARD		92
"	6	#10063822	ALPHA	BLDG #16		56
"	7	#100956669	ALPHA	"		181
"	8	#1159373	ALPHA	100773037		79
"	9	#12054771	ALPHA	P.B. GEN		
"	10	#10082386	TAB	GUARD SHACK		
"	11	#10155816e2	TAB	SUB 105		
"	12	#10060992	BETA	SUB 106		
"	13	#1109531	BETA	SUB 107		
"	14	#1112708	BETA	SUB 108		
"	15	#10173927	BETA	SUB 109		
"	16	#10058215	BETA	BLDG #10		
"	17	#1009 83165	BETA	BLDG #10		
"	18	#10155219	BETA	BLDG #10		76
"	19	#K272	BETA	SWITCHYARD		
"	20	#1011e7339	BETA	P.B GEN		

TOTAL DIESEL GALLONS: 784

REGULAR GAS GALLONS: 107

MASTER METER: _____ START: _____ FINISH: _____ TOTAL: _____

BECK OIL INC
16640 D STREET
VICTORVILLE, CA 92395
760) 245-4191

NOTE: BILLING BASED ON MASTER METER

JAMIE PAGE 02/03/12

BECK OIL, INC

WETHOSE SHEET

CUSTOMER: ABENER / CONSTRUCTION TRUCK #: _____

DATE: _____ DRIVER: _____

(CIRCLE ONE)

PRODUCT: RED DIESEL CLEAR DIESEL REGULAR GAS

	UNIT NUMBER	DESCRIPTION		GALLONS
Diesel		Beta	South Fuel Cell	54
87 2			Fuel Truck + Transfer Tank	107
Red 3			Transfer Tank	
87 4		Beta	South Fuel Cell	
5				
6				
7				
8				
9				
10				
11				
12				
13				
14				
15				
16				
17				
18				
19				
20				

TOTAL DIESEL GALLONS:

REGULAR GAS GALLONS:

MASTER METER: _____ START: _____ FINISH: _____ TOTAL: _____

BECK OIL INC
16640 D STREET
VICTORVILLE, CA 92395
760) 245-4191

NOTE: BILLING BASED ON MASTER METER

JAMIE PAGE 02/03/12

"Rundquist, Dale@Energy"
05/20/2014 02:50 PM

Send To	"Steven.Pochmara@abeinsaepc.abengoa.com" <Steven.Pochmara@abeinsaepc.abengoa.com>
cc	"pablo.schenone@abeinsaepc.abengoa.com" <pablo.schenone@abeinsaepc.abengoa.com>, "mercedes.macias@abeinsaepc.abengoa.com" <mercedes.macias@abeinsaepc.abengoa.com>, "vernon.leeming@abeinsaepc.abengoa.com" <vernon.leeming@abeinsaepc.abengoa.com>,
bcc	
Subject	RE: HAZ1-01-00

Hi Steven,
The Submittal for HAZ-1-01-00 (Revised Chemical List) has been reviewed and approved by staff.
Thank you,
Dale R.

From: Steven.Pochmara@abeinsaepc.abengoa.com [mailto:Steven.Pochmara@abeinsaepc.abengoa.com]

Sent: Wednesday, April 30, 2014 2:35 PM
To: Rundquist, Dale@Energy; Rundquist, Dale@Energy
Cc: pablo.schenone@abeinsaepc.abengoa.com; mercedes.macias@abeinsaepc.abengoa.com; vernon.leeming@abeinsaepc.abengoa.com; andres.perez@abeinsaepc.abengoa.com; kirk.anderson@abeinsaepc.abengoa.com; holmes.bassette@solar.abengoa.com; william.grisolia@solar.abengoa.com; Kathleen.Sullivan@solar.abengoa.com; frances.sanchez@solar.abengoa.com
Subject: HAZ1-01-00

Good Afternoon Dale,
Please see attached for the revised chemical list for the Mojave Solar project. The list was revised to account for the chemicals to be used in the pipe cleaning process at the steam generator. Please contact if you have any questions.

Regards,

Steven Pochmara - Permit Manager

ABEINSA EPC
13911 Park Avenue, Suite 208
Victorville, CA 92392
Cell: +14802871419
Steven.Pochmara@teyma.abengoa.com
www.teyma.com
Eco-Tip: Printing e-mails is usually a waste.

**********Internet Email Confidentiality Footer**********

This email and any files transmitted with it are confidential and intended solely for the use of the organization or individual to whom they are addressed. It is expressly forbidden to retransmit or copy email and/or this attached files without our permission. If you are not the addressee indicated in this message (or responsible for delivery of the

message to such person), you may not copy or deliver this message to anyone. In such case, you should destroy this message and kindly notify the sender by reply email. Please advise immediately if you or your employer does not consent to Internet email for messages of this kind. Opinions, conclusions and other information in this message that do not relate to the official business of my firm shall be understood as neither given nor endorsed by it.

****** Confidencialidad de Correo electr?nico de Internet ******

Este correo electr?nico y cualquier archivo transmitido con el, es confidencial y destinado exclusivamente para el empleo de la organizaci?n o el individuo a quien esta dirigido. Esta expresamente prohibido su reenvio o copia del correo electr?nico y/o de los archivos anexados sin permiso del remitente. El contenido esta protegido seg?n la regulaci?n sobre la Protecci?n de Datos e Informaci?n Personal. Si usted no es el destinatario indicado en este mensaje (o responsable de la entrega del mensaje a tal persona), no puede copiar, reenviar o entregar este mensaje. En tal caso, usted debe destruir este mensaje y notificar al remitente por el correo electr?nico de respuesta. Puede notificar igualmente si no desea recibir correos electr?nicos de esta clase. Las opiniones, conclusiones y otra informaci?n en este mensaje que no se relaciona con la actividad de la compa??a ni ser?n entendidas como autorizadas por ?sta.

ABEINSA EPC

Manjunath Shivalingappa
06/05/2014 11:17 AM

Send To	Steven Pochmara/AbeinsaEPC/Abengoa@Abengoa
cc	
bcc	
Subject	Fw: Chemical tracking

Steve,

For the month of May,

Diesel- 8812 gallons
Regular gas- 750 gallons

Thanks

Regards,

Manjunath Shivalingappa - Environmental Engineer

ABEINSA EPC
Abener Teyma Mojave General Partnership
42134 Harper Lake road
Hinkley, CA 92347
Phone: (602) 282- 4103 Cell: (480) 768- 7793
manjunath.shivalingappa@abeinsaepc.abengoa.com

Eco-Tip: Printing e-mails is usually a waste.

----- Forwarded by Manjunath Shivalingappa/AbeinsaEPC/Abengoa on 06/05/2014 11:16 AM -----

ABEINSA EPC

Donna Corey
06/05/2014 09:44 AM

Send To:	Manjunath Shivalingappa/AbeinsaEPC/Abengoa@Abengoa
cc:	
Subject:	Re: Chemical tracking

oops!

Beck Oil Wethose Sheets - May.pdf

Regards,

Donna Corey - Warehouse Administrative Assistant

ABEINSA EPC
Abener Teyma Mojave General Partnership
42134 Harper Lake Rd.
Hinkley, CA. 92347
Cell: 661-754-6921
donna.corey@abeinsaepc.abengoa.com
Eco-Tip: Printing e-mails is usually a waste.

Manjunath Shivalingappa | Hello Juan and Donna, I am r... | 06/03/2014 07:51:09 AM

ABEINSA EPC

Manjunath Shivalingappa
06/03/2014 07:51 AM

Send To: Juan Loza/AbeinsaEPC/Abengoa@Abengoa, Donna Corey/AbeinsaEPC/Abengoa@Abengoa
cc:
Subject: Chemical tracking

Hello Juan and Donna,

I am replacing Kirk Anderson - Environmental Engineer. I would like to request you to copy me in the emails from now onwards which included Kirk. Commissioning process being started, please copy me in the emails which discusses/tracks chemicals, gasses, fuel that are being delivered to the site.

Also, for our monthly reporting,

Juan, please send me the tracking of Nitrogen that has been delivered to the site.

Donna, please send me the tracking of fuel delivered.

I would really appreciate your cooperation. Thank you.

Regards,

Manjunath Shivalingappa - Environmental Engineer

ABEINSA EPC
Abener Teyma Mojave General Partnership
42134 Harper Lake road
Hinkley, CA 92347
Phone: (602) 282- 4103 Cell: (480) 768- 7793
manjunath.shivalingappa@abeinsaepc.abengoa.com
Eco-Tip: Printing e-mails is usually a waste.

tart loading	End loading	Quantity (lb)
9:45 AM	10:30 AM	44100
10:35 AM	11:00 AM	44100
10:30 AM	10:50 AM	17516
10:30 AM	12:45 PM	44840
10:10 AM	11:00 AM	47260
10:00 AM	10:45 AM	43420
10:00 AM	11:50 AM	45940
Total		287176 lb
		32486 gallons

Solutia Trucks

Date	Arriving	Start loading	End loading	Quantity (lb)	Destination
3/17/14	8:15 AM	11:30 AM	12:05 PM	47060	Alpha
3/17/14	8:15 AM	12:35 PM	1:00 PM	48220	Alpha
3/18/14	7:15 AM	8:45 AM	9:15 AM	46980	Alpha
3/18/14	8:30 AM	9:48 AM	10:15 AM	47380	Alpha
3/18/14	9:20 AM	11:30 AM	1:15 PM	47640	Beta
3/18/14	1:00 PM	2:15 PM	3:00 PM	47720	Beta
3/19/14	7:00 AM	9:00 AM	9:45 AM	48640	Beta
3/19/14	8:45 AM	10:00 AM	11:25 AM	48420	Alpha
3/19/14	9:30 AM	11:15 AM	12:45 PM	45800	Beta
3/19/14	10:15 AM	1:00 PM	1:45 PM	45860	Alpha
3/19/14	12:15 PM	1:00 PM	2:30 PM	45200	Beta
3/20/14	7:30 AM	7:45 AM	8:40 AM	41160	Beta
3/20/14	8:00 AM	9:50 AM	10:45 AM	47160	Alpha
3/20/14	8:15 AM	9:15 AM	9:35 AM	46280	Alpha
3/20/14	8:15 AM	10:35 AM	11:00 AM	45840	Alpha
3/20/14	8:15 AM	11:25 AM	12:10 PM	45340	Beta
3/20/14	10:30 AM	11:30 AM	12:00 PM	45580	Alpha
3/20/14	12:25 PM	2:00 PM	2:50 PM	46120	Beta
3/21/14	7:00 AM	7:25 AM	8:10 AM	45560	Beta
3/21/14	7:00 AM	8:30 AM	8:45 AM	46980	Alpha
3/21/14	8:15 AM	9:20 AM	9:45 AM	46960	Alpha
3/21/14	9:15 AM	9:00 AM	10:15 AM	45960	Beta
3/21/14	12:00 PM	12:15 PM	1:00 PM	43000	Beta
3/21/14	12:00 PM	1:25 PM	2:15 PM	45420	Alpha
3/24/14	7:00 AM	7:15 AM	7:35 AM	42980	Beta
3/24/14	8:30 AM	9:20 AM	10:00 AM	45100	Beta
3/24/14	7:30 AM	9:30 AM	10:15 AM	44840	Beta
3/24/14	7:30 AM	11:15 AM	11:50 AM	45360	Beta
3/24/14	7:30 AM	11:30 AM	12:10 PM	43920	Alpha
3/24/14	9:30 AM	1:45 PM	2:20 PM	44300	Alpha
3/25/14	7:00 AM	8:15 AM	8:40 AM	45280	Beta
3/25/14	7:06 AM	8:50 AM	9:25 AM	51080	Beta
3/25/14	8:45 AM	9:15 AM	10:20 AM	45580	Beta
3/26/14	6:51 AM	8:20 AM	8:45 AM	44200	Alpha
3/26/14	7:57 AM	9:00 AM	9:20 AM	44740	Alpha
3/26/14	8:08 AM	10:50 AM	11:20 AM	44880	Alpha
4/7/14	7:07 AM	9:30 AM	10:55 AM	43140	Alpha
4/7/14	7:50 AM	11:35 AM	12:00 PM	42840	Alpha
4/7/14	8:00 AM	12:20 PM	12:45 PM	42740	Alpha
4/8/14	11:30 AM	12:50 PM	1:20 PM	42740	Alpha
4/8/14	12:30 PM	1:30 PM	2:00 PM	44560	Alpha

4/8/14	2:00 PM	2:14 PM	2:38 PM	44500	Alpha
4/9/14	7:12 AM	7:30 AM	8:10 AM	46740	Alpha
4/9/14	7:15 AM	9:00 AM	9:40 AM	45540	Alpha
4/9/14	9:50 AM	11:40 AM	12:05 PM	43940	Alpha
4/10/14	7:30 AM	8:45 AM	9:10 AM	47440	Alpha
4/10/14	8:24 AM	9:55 AM	10:30 AM	45220	Alpha
4/11/14	7:00 AM	9:08 AM	9:25 AM	44940	Alpha
4/11/14	7:00 AM	9:50 AM	10:30 AM	46400	Alpha
4/11/14	7:30 AM	10:45 AM	11:30 AM	45920	Alpha
4/14/14	7:06 AM	9:00 AM	9:30 AM	45420	Alpha
4/14/14	7:12 AM	10:00 AM	10:30 AM	44780	Alpha
4/14/14	7:17 AM	12:30 PM	1:10 PM	43280	Alpha
4/14/14	8:41 AM	1:20 PM	2:00 PM	45760	Alpha
4/15/14	7:00 AM	8:45 AM	9:10 AM	45420	Alpha
4/15/14	7:00 AM	9:20 AM	9:50 AM	45640	Alpha
4/15/14	8:20 AM	10:15 AM	11:50 AM	42840	Alpha
4/15/14	10:21 AM	12:00 PM	12:30 PM	45040	Alpha
4/16/14	7:10 AM	9:00 AM	9:25 AM	46560	Alpha
4/16/14	7:10 AM	9:50 AM	10:20 AM	45160	Alpha
4/16/14	9:40 AM	10:50 AM	11:00 AM	44360	Alpha
4/16/14	9:50 AM	11:30 AM	11:50 AM	45300	Alpha
4/17/14	6:56 AM	9:10 AM	9:35 AM	45780	Alpha
4/17/14	8:48 AM	9:50 AM	10:20 AM	44460	Alpha
4/17/14	8:04 AM	10:45 AM	11:10 AM	45020	Alpha
4/17/14	7:00 AM	11:20 AM	11:45 AM	45580	Alpha
4/18/14	7:10 AM	9:20 AM	10:00 AM	47160	Beta
4/18/14	8:10 AM	10:20 AM	11:00 AM	45240	Beta
4/18/14	9:10 AM	11:20 AM	12:00 PM	45200	Beta
4/18/14	2:20 PM	3:00 PM	3:30 PM	47080	Beta
4/21/14	7:30 AM	8:00 AM	8:25 AM	46440	Alpha
4/21/14	8:00 AM	9:10 AM	9:40 AM	46700	Beta
4/21/14	10:21 AM	10:50 AM	11:25 AM	42940	Beta
4/21/14	10:35 AM	12:15 PM	12:40 PM	46300	Beta
4/22/14	7:10 AM	8:20 AM	8:45 AM	46820	Alpha
4/22/14	8:34 AM	9:00 AM	9:30 AM	45780	Alpha
4/22/14	9:30 AM	1:00 PM	1:35 PM	46180	Alpha
4/22/14	9:48 AM	12:50 PM	1:15 PM	46100	Alpha
4/23/14	7:30 AM	8:20 AM	8:45 AM	45900	Alpha
4/23/14	7:38 AM	10:50 AM	11:25 AM	44460	Beta
4/23/14	7:44 AM	12:00 PM	12:35 PM	45720	Beta
4/23/14	9:47 AM	12:50 PM	1:20 PM	43540	Beta
4/23/14	9:55 AM	1:40 PM	2:00 PM	46640	Beta
4/23/14	9:58 AM	2:10 PM	2:35 PM	46400	Beta
4/24/14	7:09 AM	11:57 AM	12:40 PM	46080	Alpha
4/24/14	7:15 AM	12:45 PM	1:20 PM	43560	Alpha

4/24/14	8:06 AM	1:45 PM	2:10 PM	48500	Alpha
4/24/14	8:51 AM	2:25 PM	2:50 PM	45040	Alpha
4/24/14	8:55 AM	3:05 PM	3:25 PM	47040	Alpha
4/24/14	9:34 AM	3:40 PM	2:00 PM	45700	Alpha
4/25/14	7:08 AM	10:30 AM	10:55 AM	45240	Alpha
4/25/14	7:15 AM	11:10 AM	11:35 AM	44200	Alpha
4/25/14	7:25 AM	11:55 AM	12:20 PM	43380	Alpha
4/25/14	10:03 AM	12:45 PM	1:20 PM	42920	Alpha
4/25/14	12:15 PM	2:00 PM	2:35 PM	45180	Alpha
5/8/14	7:04 AM	8:00 AM	8:30 AM	48200	Alpha
5/8/14	7:13 AM	8:50 AM	9:15 AM	42080	Alpha
5/8/14	7:19 AM	9:35 AM	9:55 AM	42120	Alpha
5/9/14	7:02 AM	8:00 AM	8:25 AM	46240	Alpha
5/9/14	8:00 AM	8:40 AM	9:05 AM	45860	Alpha
5/9/14	8:08 AM	9:25 AM	10:00 AM	46300	Alpha
5/9/14	9:00 AM	10:25 AM	10:55 AM	44960	Alpha
5/9/14	10:37 AM	11:15 AM	11:35 AM	45640	Alpha
5/12/14	7:06 AM	8:00 AM	8:25 AM	43780	Alpha
5/12/14	7:28 AM	8:35 AM	8:55 AM	43900	Alpha
5/12/14	7:52 AM	9:10 AM	9:35 AM	43880	Alpha
5/12/14	7:56 AM	9:45 AM	10:05 AM	44160	Alpha
5/12/14	8:56 AM	10:10 AM	10:30 AM	43120	Alpha
5/13/14	7:00 AM	8:20 AM	8:45 AM	45240	Alpha
5/13/14	7:05 AM	9:00 AM	9:20 AM	44240	Alpha
5/13/14	7:35 AM	9:40 AM	10:00 AM	45820	Alpha
5/13/14	9:45 AM	10:10 AM	10:35 AM	44300	Alpha
5/13/14	9:52 AM	10:55 AM	11:20 AM	44240	Alpha
5/14/14	6:58 AM	9:10 AM	9:35 AM	45920	Beta
5/14/14	7:05 AM	9:55 AM	10:20 AM	46260	Beta
5/14/14	7:43 AM	10:45 AM	11:20 AM	44880	Beta
5/14/14	8:37 AM	11:35 AM	12:00 PM	44600	Beta
5/14/14	9:00 AM	12:15 PM	12:40 PM	47360	Beta
5/14/14	9:08 AM	12:50 PM	1:15 PM	47180	Beta
5/15/14	7:52 AM	9:00 AM	9:40 AM	44360	Beta
5/15/14	9:00 AM	10:55 AM	11:20 AM	44180	Beta
5/15/14	9:20 AM	11:25 AM	11:50 AM	46480	Beta
5/15/14	9:28 AM	12:05 PM	12:30 PM	45300	Beta
5/15/14	9:47 AM	12:40 PM	1:00 PM	46880	Beta
5/15/14	9:55 AM	1:10 PM	1:35 PM	50060	Beta
5/16/14	7:01 AM	10:00 AM	10:20 AM	43260	Beta
5/16/14	7:10 AM	10:25 AM	10:40 AM	46580	Beta
5/16/14	8:10 AM	10:50 AM	11:25 AM	44820	Beta
5/16/14	8:57 AM	11:40 AM	12:05 PM	47220	Beta
5/16/14	9:05 AM	12:15 PM	12:35 PM	46300	Beta
5/16/14	10:45 AM	12:50 PM	1:15 PM	42360	Beta

5/19/14	7:15 AM	8:00 AM	8:25 AM	43900	Beta
5/19/14	7:25 AM	8:45 AM	9:05 AM	45740	Beta
5/19/14	7:35 AM	9:15 AM	9:40 AM	44060	Beta
5/19/14	8:40 AM	9:55 AM	10:20 AM	45460	Beta
5/19/14	9:40 AM	10:35 AM	11:00 AM	45280	Beta
5/19/14	2:00 PM	2:20 PM	2:45 PM	44520	Beta
5/20/14	7:15 AM	8:00 AM	8:25 AM	45620	Beta
5/20/14	7:20 AM	8:35 AM	9:00 AM	46900	Beta
5/20/14	7:30 AM	9:00 AM	9:25 AM	46620	Alpha
5/20/14	8:30 AM	9:35 AM	10:00 AM	45980	Alpha
5/20/14	9:25 AM	10:15 AM	10:45 AM	46780	Alpha
5/21/14	7:15 AM	7:50 AM	8:15 AM	45200	Alpha
5/21/14	7:25 AM	8:25 AM	8:50 AM	46880	Alpha
5/21/14	7:35 AM	9:00 AM	9:25 AM	45100	Alpha
5/21/14	7:45 AM	9:40 AM	9:55 AM	46260	Alpha
5/21/14	8:50 AM	10:10 AM	10:35 AM	44760	Alpha
5/21/14	9:30 AM	11:00 AM	11:25 AM	45900	Alpha
5/22/14	7:10 AM	8:00 AM	8:25 AM	45620	Alpha
5/22/14	7:20 AM	8:35 AM	9:00 AM	47300	Alpha
5/22/14	7:30 AM	9:10 AM	9:35 AM	45480	Alpha
5/22/14	7:50 AM	9:50 AM	10:15 AM	45900	Alpha
5/22/14	9:00 AM	10:25 AM	10:50 AM	45180	Alpha
5/22/14	9:15 AM	11:00 AM	11:25 AM	44940	Alpha
5/23/14	7:00 AM	8:00 AM	8:20 AM	45340	Alpha
5/23/14	7:20 AM	8:30 AM	8:50 AM	44280	Alpha
5/23/14	7:25 AM	9:00 AM	9:25 AM	44100	Alpha
5/23/14	7:30 AM	9:35 AM	10:00 AM	46020	Alpha
5/23/14	9:50 AM	10:10 AM	10:35 AM	44640	Alpha
5/23/14	10:00 AM	10:45 AM	11:05 AM	44080	Alpha

Alpha	4711740 lb	533002 gallons
Beta	2555220 lb	289052 gallons

TOTAL **7554136** lb **854540** gallons

Nitrogen Deliveries

Date	Volume (SCF)	
1/9/14		
1/9/14	611823	Alpha & Beta
2/18/14	633600	Alpha
2/21/14	576900	Beta
3/11/14	326900	Alpha
5/28/14	544900	Alpha
Total	2694123	SCF

ABENER TEYMA MOJAVE

LETTER OF TRANSMITTAL

Date: May 1, 2014
Subject: Mojave Solar Project
Condition Number: HAZ-2
Reference: Mojave Hazardous Materials Business Plan (HMBP)
To: Mr. Dale Rundquist, CPM
California Energy Commission

WE ARE SENDING YOU

☒ Attached ☐ Under separate cover via _____ the following items:

☐ Shop Drawings ☐ Prints ☐ Plans ☐ Samples ☐ Specifications
☐ Copy of Letter ☐ Change Order ☐

COPIES	DATE	NO.	DESCRIPTION
1	5/01/14	1	Cover Letter to CEC
1	5/01/14	1	Technical Memo to CEC
1	5/01/14	1	Revised Hazardous Materials Business Plan
1	5/01/14	1	Annex 1 Inventory Forms and Maps
1	5/01/14	1	Annex 2 MSDS Forms
1	5/01/14	1	Annex 3 Mojave Health and Safety Emergency Plan

THESE ARE TRANSMITTED as checked below:

☒ For Approval
☐ For your use
☐ As requested
☐ For review
☐ Approved as submitted
☐ Approved as noted
☐ Returned for corrections
☐ For review and comment

REMARKS _____

COPY TO: File

SIGNED BY: Steven Pochmara
ABEINSA EPC

ABENER TEYMA MOJAVE

13911 Park Ave, Suite 208
Victorville, CA 92392
Phone: 480-287-1419

Subject:	Mojave Solar Project (09-AFC-5C)
Condition No.:	HAZ-2
Description:	Safety Management Plan for Commissioning
Submittal No.:	HAZ2-04-00

May 1, 2014

Mr. Dale Rundquist, CPM
California Energy Commission
1516 Ninth Street (MS-2000)
Sacramento, CA 95814
drundqui@energy.state.ca.us

Dear Mr. Rundquist,

As required by the California Energy Commission and more specifically by Condition of Certification HAZ-2, attached please find the revised Hazardous Materials Business plan for your review and comment. The revised plan provides an update to the hazardous chemicals that will be on site during commissioning/operations.

Should you have any questions or need any additional information, please do not hesitate to contact me.

Sincerely,

Steven Pochmara
ABEINSA EPC
13911 Park Ave, Suite 208
Victorville, CA 92392
Cell: (480) 287-1419

ABENER TEYMA MOJAVE

13911 Park Ave., Suite 208
Victorville, CA 92392
Phone: 480-287-1419

TECHNICAL MEMO

Subject: Mojave Solar Project (09-AFC-5C)
Condition No.: HAZ-2
Description: Hazardous Materials Business Plan
Submittal No.: HAZ2-04-00

May 1, 2014

Mr. Dale Rundquist, CPM
California Energy Commission
1516 Ninth Street (MS-2000)
Sacramento, CA 95814
drundqui@energy.state.ca.us

Dear Mr. Rundquist,

In accordance to the CEC Commission decision report HAZ-2 compliance, we are submitting to your office the revised Hazardous Materials Business plan (HMBP) for the Mojave Solar Project, for your review and consideration. This revised plan provides an update for the chemicals that will be on site for commissioning/operations.

For your convenience, referenced below is the HAZ-2 CEC Compliance Condition:

HAZ-2
The project owner shall provide a Hazardous Materials Business Plan (HMBP), a Spill Prevention, Control, and Countermeasure Plan (SPCC), and a Process Safety Management Plan (PSMP) to the San Bernardino County Fire Department and the CPM for review. After receiving comments from the San Bernardino County Fire Department and the CPM, the project owner shall reflect all final recommendations in the final documents. Copies of the final HMBP, SPCC, and PSMP shall then be provided to the San Bernardino County Fire Department for information and to the CPM for approval.
Verification: At least 60 days prior to receiving any hazardous material on the site for commissioning or operations, the project owner shall provide a copy of a final Hazardous Materials Business Plan, Spill Prevention, Control, and Countermeasure Plan, and a Process Safety Management Plan to the CPM for approval.

Should you have any questions or comments, please don't hesitate to contact me.

ABENER TEYMA MOJAVE

13911 Park Ave., Suite 208
Victorville, CA 92392
Phone: 480-287-1419

Sincerely,

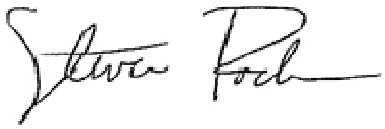

Steven Pochmara
ABEINSA EPC
13911 Park Ave., Suite 208
Victorville, CA 92392
Cell: (480) 287-1419

ABEINSA EPC
MOJAVE

Emergency Plan - HMBP

Title: Business Emergency Contingency Plan
Process: Hazardous Material Business Plan
Project: Mojave Solar Project

Document No:	PEM-0002-01
Revision:	00
Date:	6/21/13

Prepared by:	
Kirk Anderson – Environmental Engineer	Electronic Signature

Reviewed by:	
Efrain Perez – Quality Manager	Electronic Signature
Steven Pochmara – Permitting Manager	Electronic Signature

Approved by:	
Nicolas Gallo – Project Sub Director	Electronic Signature
Rafael Sanchez Mendoza – Project Director	Electronic Signature

This document belongs to the Abener Teyma Mojaves. Its total or partial reproduction, by any means, as well as distribution to third parties without the express written consent of the Abener Teyma Mojave is strictly forbidden.

Revisions Control Sheet

Revision	Date	Cause for revision	Prepared	Reviewed	Approved
00	6/21	Document Created	KIA		
01	03/15/14	Inventory Update	KIA		
02	04/30/14	Inventory Update	KIA		

Table of Contents

1. **Objective.....4**
2. **Definitions.....4**
3. **Application Field.....5**
4. **Applicable Documentation 5**
5. **Development 5**
6. **Records 11**
7. **Annex 12**

1 Objective

The primary purpose of this plan is to provide readily available information regarding the location, type, and health risks associated with hazardous materials at the Mojave Solar Project. Each business in San Bernardino County that handles, uses, generates or stores hazardous materials is required to comply with State and Federal community right to know laws, and to submit a Hazardous Materials Business Plan (HMBP). The Hazardous Materials Division of the San Bernardino County Fire Department is the Administering Agency and the Certified Unified Program Agency (CUPA) for San Bernardino County with responsibility for regulating hazardous materials handlers, hazardous waste generators, underground storage tank facilities, above ground storage tanks, and stationary sources handling regulated substances.

2 Definitions

N/A

3 Application Field

This plan applies to the entire Mojave Solar Project site for the construction and commissioning phases, which will overlap. The final phase, operations, will differ slightly from the commissioning phase, as there will be different staff operating the plant. Prior to operations, this plan will be updated with current personnel and emergency contacts.

4 Applicable Documentation

- California Health & Safety Code (CHSC), Division 20, Chapter 6.95
- California Code of Regulations (CCR), Title 19, Division 2
- Title 40, Code of Federal Regulations (CFR)
- California Energy Commission Decision – Hazardous Materials (HAZ 2)
- EPA (SARA, Title III)

5 Development

- **General Facility Information**

Mojave Solar LLC is a wholly owned subsidiary of Abengoa Solar Inc. The project will use established parabolic trough solar thermal technology to produce electrical power using a steam turbine generator fed from a solar steam generator. The solar steam generator receives heated heat transfer fluid (HTF) from solar thermal equipment comprised of arrays

of parabolic mirrors that collect energy from the sun. The California Energy Commission (CEC) has exclusive jurisdiction to license this project. The Mojave Solar site will occupy a 1,765-acre site in an unincorporated area of San Bernardino County near the community of Hinkley, California. The project site is accessed by Harper Lake Road, which is located approximately 20 miles west of Barstow along the Highway 58 corridor. The project site is approximately six miles north of where Harper Lake Road intersects with Highway 58. The existing Solar Generating Stations (SEGS) VIII and IX facilities owned by NextEra Energy Resources are immediately northwest of the project site.

The project will have a combined nominal electric output of 250 MW from twin, independently operable solar fields. Each field will feed a 125 MW power island. One site, known as the Alpha site, is in the northwest portion of the project site and will occupy 884 acres. The Beta site is in the southwest portion of the project site and will occupy 800 acres. The Alpha and Beta sites will share the remaining 81 acres of the project site for activities that include receiving and discharging offsite drainage improvements. The collector fields are comprised of single-axis-tracking parabolic trough solar collectors. These collectors are arranged to form many parallel rows aligned on a north-south axis. Each solar collector has a linear, parabolic-shaped reflector that focuses the sun's radiation on a specially designed linear receiver known as a heat collection element (HCE). The collectors track the sun from east to west to ensure that the maximum amount of the sun's radiation is continuously focused on the HCE. The HTF is heated to approximately 740° F as it circulates through the HCEs and returns to a series of heat exchangers where the fluid is used to generate steam in the solar steam generator system at the power island, thereby providing steam to the steam turbine generator.

The project will use a wet cooling tower for power plant cooling. Water for cooling and other plant purposes will come from Harper Valley Ground Basin groundwater obtained from onsite wells. A single treatment facility will be installed for each pair of wells to treat the groundwater to meet potable standards for employee use. A septic system and onsite leach field will be used to dispose of sanitary wastewater. The sun will provide 100 percent of the power supplied to the project through solar thermal collectors. No supplementary fossil-based energy source such as natural gas is proposed for electrical power production. However, each power island will have a natural-gas-fired auxiliary boiler to provide equipment freeze protection and HTF freeze protection.

The auxiliary boiler will supply steam to HTF heat exchangers as needed during offline hours to keep the HTF in a liquid state when ambient temperatures fall below its freezing point of 54° F. Each power island will also have a diesel engine-driven firewater pump for fire

protection and a diesel engine-driven backup generator for power plant essentials. The Mojave Solar electrical transmission lines will interconnect with the Southern California Edison (SCE) 230-kV Kramer-Cool Water #1 transmission, which is located adjacent to the southern border of the site. SCE is constructing the new Lockhart Substation and associated facilities (including fiber optic cable routes located outside the site), to interconnect the project to the Kramer–Coolwater 220-kV line.

6 Records

7 Annex

6007-INS-ATM-77-13-0003 Annex 01 HMBP Forms and Maps

6007-INS-ATM-77-13-0003 Annex 02 MSDS Forms

6007-INS-ATM-77-13-0003 Annex 03 Mojave Health and Safety Emergency Plan

San Bernardino County Fire Department • Hazardous Materials Division

INVENTORY SUMMARY FORM

I. FACILITY IDENTIFICATION

FACILITY ID # F A 1 (This number is on your CUPA permit.)

BUSINESS NAME (Same as FACILITY NAME or DBA) 3

Mojave Solar Project LLC – Chemical Inventory – (page 1)

Item #	Name of Hazardous Material or Waste	Maximum Quantity	Size of Largest Container	Unit of Measure
3.	*Lubricating Oil (Example Only)*	*555*	*500*	*Gallon*
1	Diesel Fuel	9700	4000	gallon
2	Gasoline	2000	2000	gallon
3	Hydraulic Oil	5280	330	gallon
4	Paints/Solvents	550	55	gallon
5	Motor Oil	110	55	gallon
6	Propane Fuel	300	50	gallon
7	Acetylene Gas – (Welding)	3600	300	Cu ft
8	Oxygen Gas – (Welding)	3500	282	Cu ft
9	Aqueous Ammonia – 12.5%	660	330	Gallon
10	Carbohydrazide	1200	300	gallon
11	Tri-Sodium Phosphate Solution	250	200	gallon
12	Phosphoric Acid – 60 – 70%	660	330	gallon

Summarize the Business Plan inventory on this page. Place this summary in front of the inventory section of the Business Plan. Make copies of this sheet as necessary. Reminder: You need not report hazardous materials with a maximum quantity of less than 55 gallons, 500/5000 pounds, 200/1000 cubic feet, or the threshold planning quantity of an extremely hazardous substance. However, hazardous wastes, Category 1 and 2 pesticides, and explosives are reportable at any quantity.

III. SIGNATURE- EPCRA Facilities MUST sign the bottom of each individual attached inventory form.

SIGNATURE OF OWNER/OPERATOR	NAME OF SIGNER (*print*) 136	DATE 134
	Kirk Anderson	04/30/2014

San Bernardino County Fire Department • Hazardous Materials Division

INVENTORY SUMMARY FORM

I. FACILITY IDENTIFICATION

FACILITY ID # F A 1 (This number is on your CUPA permit.)

BUSINESS NAME (Same as FACILITY NAME or DBA) 3

Mojave Solar Project LLC – Chemical Inventory – (page 2)

Item #	Name of Hazardous Material or Waste	Maximum Quantity	Size of Largest Container	Unit of Measure
3.	*Lubricating Oil (Example Only)*	*555*	*500*	*Gallon*
13	Sodium Bisulfite – 38%	660	330	gallon
14	Sodium Hypochlorite – 12.5%	5280	2640	gallon
15	Magnesium Sulfate – 27%	15320	7660	gallon silo
16	Slacked Lime	21664	21664	gallon silo
17	Soda Ash - 95% Sodium Carbonate	15320	7660	gallon silo
18	Anionic Flocculant Polymer Powder	660	330	gallon
19	Ferric Chloride – 40%	660	330	gallon
20	Sodium Bisulfite – 35%	660	330	gallon
21	Phosphoric Acid	660	330	gallon
22	Liquid Carbon Dioxide	26000	13000	gallon tank
23	Sodium EDTA	600	100	Lb bags
24	Sulfuric Acid - 98%	660	330	gallon

Summarize the Business Plan inventory on this page. Place this summary in front of the inventory section of the Business Plan. Make copies of this sheet as necessary. Reminder: You need not report hazardous materials with a maximum quantity of less than 55 gallons, 500/5000 pounds, 200/1000 cubic feet, or the threshold planning quantity of an extremely hazardous substance. However, hazardous wastes, Category 1 and 2 pesticides, and explosives are reportable at any quantity.

III. SIGNATURE- EPCRA Facilities MUST sign the bottom of each individual attached inventory form.

SIGNATURE OF OWNER/OPERATOR	NAME OF SIGNER (*print*) 136	DATE 134
	Kirk Anderson	04/30/2014

San Bernardino County Fire Department • Hazardous Materials Division

INVENTORY SUMMARY FORM

I. FACILITY IDENTIFICATION

FACILITY ID # F A [redacted] 1 (This number is on your CUPA permit.)

BUSINESS NAME (Same as FACILITY NAME or DBA) 3

Mojave Solar Project LLC – Chemical Inventory – (page 3)

Item #	Name of Hazardous Material or Waste	Maximum Quantity	Size of Largest Container	Unit of Measure
3.	*Lubricating Oil (Example Only)*	*555*	*500*	*Gallon*
25	Sodium Hydroxide - 50%	3350	330	gallon
26	Heat Transfer Fluid – Biphenyl	2,300,000	57,000	gallon
27	Carbon Dioxide Gas	6272	196	Cu ft
28	Hydrogen Gas	3196	196	Cu ft
29	Nitrogen	26000	13000	gallon
30	Ammonium Hydroxide	8840	6900	gallon
31	Citric Acid	9420	6900	gallon
32	Bonderite	240	55	gallon
33	Sodium Nitrate	8200	50	Lb
34	Surfactant NP95	440	55	gallon

Summarize the Business Plan inventory on this page. Place this summary in front of the inventory section of the Business Plan. Make copies of this sheet as necessary. Reminder: You need not report hazardous materials with a maximum quantity of less than 55 gallons, 500/5000 pounds, 200/1000 cubic feet, or the threshold planning quantity of an extremely hazardous substance. However, hazardous wastes, Category 1 and 2 pesticides, and explosives are reportable at any quantity.

III. SIGNATURE- EPCRA Facilities MUST sign the bottom of each individual attached inventory form.

SIGNATURE OF OWNER/OPERATOR	NAME OF SIGNER (*print*) 136	DATE 134
	Kirk Anderson	04/30/2014

San Bernardino County Fire Department • Hazardous Materials Division
HAZARDOUS MATERIALS INVENTORY – CHEMICAL DESCRIPTION

☒MATERIAL ☐WASTE — Page _1__ of __35_

I. FACILITY INFORMATION

BUSINESS NAME (Same as FACILITY NAME or DBA – Doing Business As) 3
Mojave Solar Project LLC

FACILITY ID #	F	A								1	MAP# 1-A 203	GRID# F36,C20 204

II. CHEMICAL INFORMATION

CHEMICAL NAME 205	TRADE SECRET ☐ Yes ☒ No 206
Diesel Fuel	If Subject to EPCRA, refer to instructions
COMMON NAME 207	EHS* ☐ Yes ☒ No 208
Diesel Fuel	
CAS# 209	*If EHS is "Yes", all amounts below must be in lbs.

HAZARDOUS MATERIAL TYPE (Check one item only)	RADIOACTIVE	CURIES
☒ a. PURE ☐ b. MIXTURE ☐ c. WASTE 211	☐ Yes ☒ No 212	213
PHYSICAL STATE (Check one item only)	LARGEST CONTAINER	215
☐ a. SOLID ☒ b. LIQUID ☐ c. GAS 214	4000 gallon tank	

FED HAZARD CATEGORIES (Check all that apply) 216
☒ a. FIRE ☐ b. REACTIVE ☐ c. PRESSURE RELEASE ☐ d. ACUTE HEALTH ☐ e. CHRONIC HEALTH

AVERAGE DAILY AMOUNT 217	MAXIMUM DAILY AMOUNT 218	ANNUAL WASTE AMOUNT 219	STATE WASTE CODE 220
5500	9700		

UNITS* (Check one item only) 221
☒ a. GALLONS ☐ b. CUBIC FEET ☐ c. POUNDS ☐ d. TONS
* If EHS, amount must be in pounds.

DAYS ON SITE: 365 222

STORAGE CONTAINER 223
☒ a. ABOVE GROUND TANK ☐ e. PLASTIC/NONMETALLIC DRUM ☐ i. FIBER DRUM ☐ m. GLASS BOTTLE ☐ q. RAIL CAR
☐ b. UNDERGROUND TANK ☐ f. CAN ☐ j. BAG ☐ n. PLASTIC BOTTLE ☐ r. OTHER
☐ c. TANK INSIDE BUILDING ☐ g. CARBOY ☐ k. BOX ☐ o. TOTE BIN
☐ d. STEEL DRUM ☐ h. SILO ☐ l. CYLINDER ☐ p. TANK WAGON

STORAGE PRESSURE 224
☒ a. AMBIENT ☐ b. ABOVE AMBIENT ☐ c. BELOW AMBIENT

STORAGE TEMPERATURE 225
☒ a. AMBIENT ☐ b. ABOVE AMBIENT ☐ c. BELOW AMBIENT ☐ d. CRYOGENIC

	%WT	HAZARDOUS COMPONENT (For mixture or waste only)	EHS	CAS #
1	100 226	Petroleum Products 227	☐ Yes ☒ No 228	229
2	230	231	☐ Yes ☐ No 232	233
3	234	235	☐ Yes ☐ No 236	237
4	238	239	☐ Yes ☐ No 240	241
5	242	243	☐ Yes ☐ No 244	245

If more hazardous components are present at greater than 1% by weight if non-carcinogenic, or > 0.1% by weight if carcinogenic, attach additional sheets of paper capturing the required information.

ADDITIONAL LOCALLY COLLECTED INFORMATION 246

Diesel fuel tanks are in various locations around project. Some are mobile.

If EPCRA, Please Sign Here

San Bernardino County Fire Department • Hazardous Materials Division
HAZARDOUS MATERIALS INVENTORY – CHEMICAL DESCRIPTION

☒MATERIAL ☐WASTE — Page __2_ of 35_

I. FACILITY INFORMATION

BUSINESS NAME (Same as FACILITY NAME or DBA – Doing Business As) 3
Mojave Solar Project LLC

FACILITY ID #	F	A								1	MAP# 203	GRID# 204
											1-A	F30

II. CHEMICAL INFORMATION

CHEMICAL NAME 205	TRADE SECRET ☐ Yes ☒ No 206
Gasoline	If Subject to EPCRA, refer to instructions
COMMON NAME 207	EHS* ☐ Yes ☒ No 208
Gasoline	
CAS# 209	*If EHS is "Yes", all amounts below must be in lbs.

HAZARDOUS MATERIAL TYPE (Check one item only) ☒ a. PURE ☐ b. MIXTURE ☐ c. WASTE 211	RADIOACTIVE ☐ Yes ☒ No 212	CURIES 213
PHYSICAL STATE (Check one item only) ☐ a. SOLID ☒ b. LIQUID ☐ c. GAS 214	LARGEST CONTAINER 250 gallon tank	215

FED HAZARD CATEGORIES (Check all that apply) 216
☒ a. FIRE ☐ b. REACTIVE ☐ c. PRESSURE RELEASE ☐ d. ACUTE HEALTH ☐ e. CHRONIC HEALTH

AVERAGE DAILY AMOUNT 217	MAXIMUM DAILY AMOUNT 218	ANNUAL WASTE AMOUNT 219	STATE WASTE CODE 220
1500	2000		

UNITS* (Check one item only) 221 ☒ a. GALLONS ☐ b. CUBIC FEET ☐ c. POUNDS ☐ d. TONS
* If EHS, amount must be in pounds.
DAYS ON SITE: 365 222

STORAGE CONTAINER 223
☒ a. ABOVE GROUND TANK ☐ e. PLASTIC/NONMETALLIC DRUM ☐ i. FIBER DRUM ☐ m. GLASS BOTTLE ☐ q. RAIL CAR
☐ b. UNDERGROUND TANK ☐ f. CAN ☐ j. BAG ☐ n. PLASTIC BOTTLE ☐ r. OTHER
☐ c. TANK INSIDE BUILDING ☐ g. CARBOY ☐ k. BOX ☐ o. TOTE BIN
☐ d. STEEL DRUM ☐ h. SILO ☐ l. CYLINDER ☐ p. TANK WAGON

STORAGE PRESSURE 224 ☒ a. AMBIENT ☐ b. ABOVE AMBIENT ☐ c. BELOW AMBIENT

STORAGE TEMPERATURE 225 ☒ a. AMBIENT ☐ b. ABOVE AMBIENT ☐ c. BELOW AMBIENT ☐ d. CRYOGENIC

	%WT	HAZARDOUS COMPONENT (For mixture or waste only)	EHS	CAS #
1	100 226	Petroleum Distillates 227	☐ Yes ☒ No 228	86290-81-5 229
2	230	231	☐ Yes ☐ No 232	233
3	234	235	☐ Yes ☐ No 236	237
4	238	239	☐ Yes ☐ No 240	241
5	242	243	☐ Yes ☐ No 244	245

If more hazardous components are present at greater than 1% by weight if non-carcinogenic, or > 0.1% by weight if carcinogenic, attach additional sheets of paper capturing the required information.

ADDITIONAL LOCALLY COLLECTED INFORMATION 246

San Bernardino County Fire Department • Hazardous Materials Division
HAZARDOUS MATERIALS INVENTORY – CHEMICAL DESCRIPTION

☒MATERIAL ☐WASTE — Page _3__ of _35__

I. FACILITY INFORMATION

BUSINESS NAME (Same as FACILITY NAME or DBA – Doing Business As) 3
Mojave Solar Project LLC

FACILITY ID # F A 1 | MAP# 203: 1-A | GRID# 204: E26

II. CHEMICAL INFORMATION

CHEMICAL NAME 205: Hydraulic Oil
TRADE SECRET ☐ Yes ☒ No 206 — If Subject to EPCRA, refer to instructions
COMMON NAME 207: Hydraulic Oil
EHS* ☐ Yes ☒ No 208
CAS# 209
*If EHS is "Yes", all amounts below must be in lbs.

HAZARDOUS MATERIAL TYPE (Check one item only) ☐ a. PURE ☒ b. MIXTURE ☐ c. WASTE 211
RADIOACTIVE ☐ Yes ☒ No 212
CURIES 213
PHYSICAL STATE (Check one item only) ☐ a. SOLID ☒ b. LIQUID ☐ c. GAS 214
LARGEST CONTAINER 330 gallon tote/tank 215
FED HAZARD CATEGORIES (Check all that apply) ☒ a. FIRE ☐ b. REACTIVE ☐ c. PRESSURE RELEASE ☐ d. ACUTE HEALTH ☒ e. CHRONIC HEALTH 216

AVERAGE DAILY AMOUNT 217	MAXIMUM DAILY AMOUNT 218	ANNUAL WASTE AMOUNT 219	STATE WASTE CODE 220
3200	5280		

UNITS* (Check one item only) ☒ a. GALLONS ☐ b. CUBIC FEET ☐ c. POUNDS ☐ d. TONS 221
* If EHS, amount must be in pounds.
DAYS ON SITE: 365 222

STORAGE CONTAINER
☐ a. ABOVE GROUND TANK ☐ b. UNDERGROUND TANK ☐ c. TANK INSIDE BUILDING ☐ d. STEEL DRUM
☐ e. PLASTIC/NONMETALLIC DRUM ☐ f. CAN ☐ g. CARBOY ☐ h. SILO
☐ i. FIBER DRUM ☐ j. BAG ☐ k. BOX ☐ l. CYLINDER
☐ m. GLASS BOTTLE ☐ n. PLASTIC BOTTLE ☒ o. TOTE BIN ☐ p. TANK WAGON
☐ q. RAIL CAR ☐ r. OTHER 223

STORAGE PRESSURE ☒ a. AMBIENT ☐ b. ABOVE AMBIENT ☐ c. BELOW AMBIENT 224

STORAGE TEMPERATURE ☒ a. AMBIENT ☐ b. ABOVE AMBIENT ☐ c. BELOW AMBIENT ☐ d. CRYOGENIC 225

	%WT	HAZARDOUS COMPONENT (For mixture or waste only)	EHS	CAS #
1	100 226	Petroleum 227	☐ Yes ☒ No 228	64742-55-8 229
2	230	231	☐ Yes ☐ No 232	233
3	234	235	☐ Yes ☐ No 236	237
4	238	239	☐ Yes ☐ No 240	241
5	242	243	☐ Yes ☐ No 244	245

If more hazardous components are present at greater than 1% by weight if non-carcinogenic, or > 0.1% by weight if carcinogenic, attach additional sheets of paper capturing the required information.

ADDITIONAL LOCALLY COLLECTED INFORMATION 246

If EPCRA, Please Sign Here

San Bernardino County Fire Department • Hazardous Materials Division
HAZARDOUS MATERIALS INVENTORY – CHEMICAL DESCRIPTION

☒MATERIAL ☐WASTE — Page _4__ of _35__

I. FACILITY INFORMATION

BUSINESS NAME (Same as FACILITY NAME or DBA – Doing Business As) 3
Mojave Solar Project LLC

FACILITY ID #	F	A								1	MAP# 203	GRID# 204
											1-A	F32, C21

II. CHEMICAL INFORMATION

CHEMICAL NAME 205	TRADE SECRET ☐ Yes ☒ No 206
Paints/Solvents	If Subject to EPCRA, refer to instructions
COMMON NAME 207	EHS* ☐ Yes ☒ No 208
Paints/Solvents	
CAS# 209	*If EHS is "Yes", all amounts below must be in lbs.

HAZARDOUS MATERIAL TYPE (Check one item only)	RADIOACTIVE	CURIES
☐ a. PURE ☒ b. MIXTURE ☐ c. WASTE 211	☐ Yes ☒ No 212	213
PHYSICAL STATE (Check one item only)	LARGEST CONTAINER	215
☐ a. SOLID ☒ b. LIQUID ☐ c. GAS 214	55 gallon drum	

FED HAZARD CATEGORIES (Check all that apply) 216
☒ a. FIRE ☐ b. REACTIVE ☐ c. PRESSURE RELEASE ☐ d. ACUTE HEALTH ☒ e. CHRONIC HEALTH

AVERAGE DAILY AMOUNT 217	MAXIMUM DAILY AMOUNT 218	ANNUAL WASTE AMOUNT 219	STATE WASTE CODE 220
350	550		

UNITS* (Check one item only) 221	DAYS ON SITE: 222
☒ a. GALLONS ☐ b. CUBIC FEET ☐ c. POUNDS ☐ d. TONS * If EHS, amount must be in pounds.	365

STORAGE CONTAINER 223
☐ a. ABOVE GROUND TANK ☐ e. PLASTIC/NONMETALLIC DRUM ☐ i. FIBER DRUM ☐ m. GLASS BOTTLE ☐ q. RAIL CAR
☐ b. UNDERGROUND TANK ☒ f. CAN ☐ j. BAG ☐ n. PLASTIC BOTTLE ☒ r. OTHER
☐ c. TANK INSIDE BUILDING ☐ g. CARBOY ☐ k. BOX ☐ o. TOTE BIN
☒ d. STEEL DRUM ☐ h. SILO ☐ l. CYLINDER ☐ p. TANK WAGON

STORAGE PRESSURE 224
☒ a. AMBIENT ☐ b. ABOVE AMBIENT ☐ c. BELOW AMBIENT

STORAGE TEMPERATURE 225
☒ a. AMBIENT ☐ b. ABOVE AMBIENT ☐ c. BELOW AMBIENT ☐ d. CRYOGENIC

	%WT	HAZARDOUS COMPONENT (For mixture or waste only)	EHS	CAS #
1	50 226	Misc. paints 227	☐ Yes ☒ No 228	229
2	50 230	Organic solvents 231	☐ Yes ☒ No 232	233
3	234	235	☐ Yes ☐ No 236	237
4	238	239	☐ Yes ☐ No 240	241
5	242	243	☐ Yes ☐ No 244	245

If more hazardous components are present at greater than 1% by weight if non-carcinogenic, or > 0.1% by weight if carcinogenic, attach additional sheets of paper capturing the required information.

ADDITIONAL LOCALLY COLLECTED INFORMATION 246

If EPCRA, Please Sign Here

San Bernardino County Fire Department • Hazardous Materials Division
HAZARDOUS MATERIALS INVENTORY – CHEMICAL DESCRIPTION

☒MATERIAL ☐WASTE — Page _5__ of _35__

I. FACILITY INFORMATION

BUSINESS NAME (Same as FACILITY NAME or DBA – Doing Business As) 3
Mojave Solar Project LLC

FACILITY ID #	F	A								1	MAP# 203	GRID# 204
											1-A	F32, C21

II. CHEMICAL INFORMATION

CHEMICAL NAME 205: Motor Oil	TRADE SECRET ☐ Yes ☒ No 206 (If Subject to EPCRA, refer to instructions)
COMMON NAME 207: Motor Oil	EHS* ☐ Yes ☒ No 208
CAS# 209	*If EHS is "Yes", all amounts below must be in lbs.

HAZARDOUS MATERIAL TYPE (Check one item only) ☐ a. PURE ☒ b. MIXTURE ☐ c. WASTE 211	RADIOACTIVE ☐ Yes ☒ No 212	CURIES 213
PHYSICAL STATE (Check one item only) ☐ a. SOLID ☒ b. LIQUID ☐ c. GAS 214	LARGEST CONTAINER 55 gallon drum 215	

FED HAZARD CATEGORIES (Check all that apply) 216: ☒ a. FIRE ☐ b. REACTIVE ☐ c. PRESSURE RELEASE ☐ d. ACUTE HEALTH ☐ e. CHRONIC HEALTH

AVERAGE DAILY AMOUNT 217	MAXIMUM DAILY AMOUNT 218	ANNUAL WASTE AMOUNT 219	STATE WASTE CODE 220
85	110		

UNITS* (Check one item only) 221: ☒ a. GALLONS ☐ b. CUBIC FEET ☐ c. POUNDS ☐ d. TONS
* If EHS, amount must be in pounds.

DAYS ON SITE: 365 222

STORAGE CONTAINER 223:
☐ a. ABOVE GROUND TANK ☐ b. UNDERGROUND TANK ☐ c. TANK INSIDE BUILDING ☒ d. STEEL DRUM ☐ e. PLASTIC/NONMETALLIC DRUM ☒ f. CAN ☐ g. CARBOY ☐ h. SILO ☐ i. FIBER DRUM ☐ j. BAG ☐ k. BOX ☐ l. CYLINDER ☐ m. GLASS BOTTLE ☐ n. PLASTIC BOTTLE ☐ o. TOTE BIN ☐ p. TANK WAGON ☐ q. RAIL CAR ☐ r. OTHER

STORAGE PRESSURE 224: ☒ a. AMBIENT ☐ b. ABOVE AMBIENT ☐ c. BELOW AMBIENT

STORAGE TEMPERATURE 225: ☒ a. AMBIENT ☐ b. ABOVE AMBIENT ☐ c. BELOW AMBIENT ☐ d. CRYOGENIC

	%WT	HAZARDOUS COMPONENT (For mixture or waste only)	EHS	CAS #
1	100 226	Petroleum based oils 227	☐ Yes ☒ No 228	64742-55-8 229
2	230	231	☐ Yes ☐ No 232	233
3	234	235	☐ Yes ☐ No 236	237
4	238	239	☐ Yes ☐ No 240	241
5	242	243	☐ Yes ☐ No 244	245

If more hazardous components are present at greater than 1% by weight if non-carcinogenic, or > 0.1% by weight if carcinogenic, attach additional sheets of paper capturing the required information.

ADDITIONAL LOCALLY COLLECTED INFORMATION 246

If EPCRA, Please Sign Here

San Bernardino County Fire Department • Hazardous Materials Division
HAZARDOUS MATERIALS INVENTORY – CHEMICAL DESCRIPTION

☒MATERIAL ☐WASTE — Page _6__ of __35_

I. FACILITY INFORMATION

BUSINESS NAME (Same as FACILITY NAME or DBA – Doing Business As) 3
Mojave Solar Project LLC

FACILITY ID # F A 1 | MAP# 203: 1-A | GRID# 204: F32, C21, E26

II. CHEMICAL INFORMATION

CHEMICAL NAME 205: Propane
TRADE SECRET ☐ Yes ☒ No 206 — If Subject to EPCRA, refer to instructions
COMMON NAME 207: Propane
EHS* ☐ Yes ☒ No 208
CAS# 209
*If EHS is "Yes", all amounts below must be in lbs.

HAZARDOUS MATERIAL TYPE (Check one item only) ☒ a. PURE ☐ b. MIXTURE ☐ c. WASTE 211
RADIOACTIVE ☐ Yes ☒ No 212
CURIES 213
PHYSICAL STATE (Check one item only) ☐ a. SOLID ☐ b. LIQUID ☒ c. GAS 214
LARGEST CONTAINER 50 gallon 215
FED HAZARD CATEGORIES (Check all that apply) ☒ a. FIRE ☐ b. REACTIVE ☐ c. PRESSURE RELEASE ☐ d. ACUTE HEALTH ☐ e. CHRONIC HEALTH 216

AVERAGE DAILY AMOUNT 217	MAXIMUM DAILY AMOUNT 218	ANNUAL WASTE AMOUNT 219	STATE WASTE CODE 220
200	300		

UNITS* (Check one item only) ☐ a. GALLONS ☐ b. CUBIC FEET ☐ c. POUNDS ☐ d. TONS 221
* If EHS, amount must be in pounds.
DAYS ON SITE: 365 222

STORAGE CONTAINER
☐ a. ABOVE GROUND TANK ☐ b. UNDERGROUND TANK ☐ c. TANK INSIDE BUILDING ☐ d. STEEL DRUM
☐ e. PLASTIC/NONMETALLIC DRUM ☐ f. CAN ☐ g. CARBOY ☐ h. SILO
☐ i. FIBER DRUM ☐ j. BAG ☐ k. BOX ☒ l. CYLINDER
☐ m. GLASS BOTTLE ☐ n. PLASTIC BOTTLE ☐ o. TOTE BIN ☐ p. TANK WAGON
☐ q. RAIL CAR ☐ r. OTHER 223

STORAGE PRESSURE ☐ a. AMBIENT ☒ b. ABOVE AMBIENT ☐ c. BELOW AMBIENT 224

STORAGE TEMPERATURE ☒ a. AMBIENT ☐ b. ABOVE AMBIENT ☐ c. BELOW AMBIENT ☐ d. CRYOGENIC 225

	%WT	HAZARDOUS COMPONENT (For mixture or waste only)	EHS	CAS #
1	100 226	Propane Gas 227	☐ Yes ☒ No 228	74-98-6 229
2	230	231	☐ Yes ☐ No 232	233
3	234	235	☐ Yes ☐ No 236	237
4	238	239	☐ Yes ☐ No 240	241
5	242	243	☐ Yes ☐ No 244	245

If more hazardous components are present at greater than 1% by weight if non-carcinogenic, or > 0.1% by weight if carcinogenic, attach additional sheets of paper capturing the required information.

ADDITIONAL LOCALLY COLLECTED INFORMATION 246

If EPCRA, Please Sign Here

San Bernardino County Fire Department • Hazardous Materials Division
HAZARDOUS MATERIALS INVENTORY – CHEMICAL DESCRIPTION

☒MATERIAL ☐WASTE — Page _7__ of _35__

I. FACILITY INFORMATION

BUSINESS NAME (Same as FACILITY NAME or DBA – Doing Business As) 3
Mojave Solar Project LLC

FACILITY ID #	F	A								1	MAP# 203	GRID# 204
											1-A	E35, F31, C22

II. CHEMICAL INFORMATION

CHEMICAL NAME 205	TRADE SECRET ☐ Yes ☒ No 206
Acetylene	If Subject to EPCRA, refer to instructions
COMMON NAME 207	EHS* ☐ Yes ☒ No 208
Acetylene	
CAS# 209	*If EHS is "Yes", all amounts below must be in lbs.

HAZARDOUS MATERIAL TYPE (Check one item only)	☒ a. PURE ☐ b. MIXTURE ☐ c. WASTE 211	RADIOACTIVE ☐ Yes ☒ No 212	CURIES 213
PHYSICAL STATE (Check one item only)	☐ a. SOLID ☐ b. LIQUID ☒ c. GAS 214	LARGEST CONTAINER 300 cu ft	215

FED HAZARD CATEGORIES (Check all that apply) 216
☒ a. FIRE ☐ b. REACTIVE ☐ c. PRESSURE RELEASE ☐ d. ACUTE HEALTH ☐ e. CHRONIC HEALTH

AVERAGE DAILY AMOUNT 217	MAXIMUM DAILY AMOUNT 218	ANNUAL WASTE AMOUNT 219	STATE WASTE CODE 220
2000	3600		

UNITS* (Check one item only) 221 ☐ a. GALLONS ☒ b. CUBIC FEET ☐ c. POUNDS ☐ d. TONS
* If EHS, amount must be in pounds.

DAYS ON SITE: 365 222

STORAGE CONTAINER 223
☐ a. ABOVE GROUND TANK ☐ e. PLASTIC/NONMETALLIC DRUM ☐ i. FIBER DRUM ☐ m. GLASS BOTTLE ☐ q. RAIL CAR
☐ b. UNDERGROUND TANK ☐ f. CAN ☐ j. BAG ☐ n. PLASTIC BOTTLE ☐ r. OTHER
☐ c. TANK INSIDE BUILDING ☐ g. CARBOY ☐ k. BOX ☐ o. TOTE BIN
☐ d. STEEL DRUM ☐ h. SILO ☒ l. CYLINDER ☐ p. TANK WAGON

STORAGE PRESSURE 224 ☐ a. AMBIENT ☒ b. ABOVE AMBIENT ☐ c. BELOW AMBIENT

STORAGE TEMPERATURE 225 ☒ a. AMBIENT ☐ b. ABOVE AMBIENT ☐ c. BELOW AMBIENT ☐ d. CRYOGENIC

	%WT	HAZARDOUS COMPONENT (For mixture or waste only)	EHS	CAS #
1	100 226	Acetylene Gas 227	☐ Yes ☒ No 228	74-86-2 229
2	230	231	☐ Yes ☐ No 232	233
3	234	235	☐ Yes ☐ No 236	237
4	238	239	☐ Yes ☐ No 240	241
5	242	243	☐ Yes ☐ No 244	245

If more hazardous components are present at greater than 1% by weight if non-carcinogenic, or > 0.1% by weight if carcinogenic, attach additional sheets of paper capturing the required information.

ADDITIONAL LOCALLY COLLECTED INFORMATION 246

If EPCRA, Please Sign Here

San Bernardino County Fire Department • Hazardous Materials Division
HAZARDOUS MATERIALS INVENTORY – CHEMICAL DESCRIPTION

☒MATERIAL ☐WASTE — Page _8__ of __35_

I. FACILITY INFORMATION

BUSINESS NAME (Same as FACILITY NAME or DBA – Doing Business As) 3
Mojave Solar Project LLC

FACILITY ID # F A | 1 | MAP# 203: 1-A | GRID# 204: E35, F31, C22

II. CHEMICAL INFORMATION

CHEMICAL NAME 205: Oxygen
TRADE SECRET ☐ Yes ☒ No 206 — If Subject to EPCRA, refer to instructions
COMMON NAME 207: Oxygen
EHS* ☐ Yes ☒ No 208
CAS# 209
*If EHS is "Yes", all amounts below must be in lbs.

HAZARDOUS MATERIAL TYPE (Check one item only) 211: ☒ a. PURE ☐ b. MIXTURE ☐ c. WASTE
RADIOACTIVE ☐ Yes ☒ No 212
CURIES 213

PHYSICAL STATE (Check one item only) 214: ☐ a. SOLID ☐ b. LIQUID ☒ c. GAS
LARGEST CONTAINER 282 cu ft 215

FED HAZARD CATEGORIES (Check all that apply) 216: ☒ a. FIRE ☐ b. REACTIVE ☐ c. PRESSURE RELEASE ☐ d. ACUTE HEALTH ☐ e. CHRONIC HEALTH

AVERAGE DAILY AMOUNT 217	MAXIMUM DAILY AMOUNT 218	ANNUAL WASTE AMOUNT 219	STATE WASTE CODE 220
2400	3500		

UNITS* (Check one item only) 221: ☐ a. GALLONS ☒ b. CUBIC FEET ☐ c. POUNDS ☐ d. TONS
* If EHS, amount must be in pounds.
DAYS ON SITE: 365 222

STORAGE CONTAINER 223:
☐ a. ABOVE GROUND TANK ☐ b. UNDERGROUND TANK ☐ c. TANK INSIDE BUILDING ☐ d. STEEL DRUM ☐ e. PLASTIC/NONMETALLIC DRUM ☐ f. CAN ☐ g. CARBOY ☐ h. SILO ☐ i. FIBER DRUM ☐ j. BAG ☐ k. BOX ☒ l. CYLINDER ☐ m. GLASS BOTTLE ☐ n. PLASTIC BOTTLE ☐ o. TOTE BIN ☐ p. TANK WAGON ☐ q. RAIL CAR ☐ r. OTHER

STORAGE PRESSURE 224: ☐ a. AMBIENT ☒ b. ABOVE AMBIENT ☐ c. BELOW AMBIENT

STORAGE TEMPERATURE 225: ☒ a. AMBIENT ☐ b. ABOVE AMBIENT ☐ c. BELOW AMBIENT ☐ d. CRYOGENIC

	%WT	HAZARDOUS COMPONENT (For mixture or waste only)	EHS	CAS #
1	100 226	Oxygen Gas 227	☐ Yes ☒ No 228	7782-44-7 229
2	230	231	☐ Yes ☐ No 232	233
3	234	235	☐ Yes ☐ No 236	237
4	238	239	☐ Yes ☐ No 240	241
5	242	243	☐ Yes ☐ No 244	245

If more hazardous components are present at greater than 1% by weight if non-carcinogenic, or > 0.1% by weight if carcinogenic, attach additional sheets of paper capturing the required information.

San Bernardino County Fire Department • Hazardous Materials Division
HAZARDOUS MATERIALS INVENTORY – CHEMICAL DESCRIPTION

☒MATERIAL ☐WASTE — Page _9__ of _35_

I. FACILITY INFORMATION

BUSINESS NAME (Same as FACILITY NAME or DBA – Doing Business As) 3
Mojave Solar Project LLC

FACILITY ID # F A 1 | MAP# 203: 1-A | GRID# 204: E35, F31, C22

II. CHEMICAL INFORMATION

CHEMICAL NAME 205: Aqueous Ammonia
TRADE SECRET ☐ Yes ☒ No 206 — If Subject to EPCRA, refer to instructions
COMMON NAME 207: Aqueous Ammonia
EHS* ☐ Yes ☒ No 208
CAS# 209
*If EHS is "Yes", all amounts below must be in lbs.

HAZARDOUS MATERIAL TYPE (Check one item only) ☐ a. PURE ☒ b. MIXTURE ☐ c. WASTE 211
RADIOACTIVE ☐ Yes ☒ No 212
CURIES 213
PHYSICAL STATE (Check one item only) ☐ a. SOLID ☒ b. LIQUID ☐ c. GAS 214
LARGEST CONTAINER 330 gallon 215
FED HAZARD CATEGORIES (Check all that apply) 216: ☐ a. FIRE ☒ b. REACTIVE ☐ c. PRESSURE RELEASE ☐ d. ACUTE HEALTH ☒ e. CHRONIC HEALTH

AVERAGE DAILY AMOUNT 217	MAXIMUM DAILY AMOUNT 218	ANNUAL WASTE AMOUNT 219	STATE WASTE CODE 220
350	660		

UNITS* (Check one item only) 221: ☒ a. GALLONS ☐ b. CUBIC FEET ☐ c. POUNDS ☐ d. TONS
* If EHS, amount must be in pounds.
DAYS ON SITE: 365 222

STORAGE CONTAINER 223:
☒ a. ABOVE GROUND TANK ☐ b. UNDERGROUND TANK ☐ c. TANK INSIDE BUILDING ☐ d. STEEL DRUM ☐ e. PLASTIC/NONMETALLIC DRUM ☐ f. CAN ☐ g. CARBOY ☐ h. SILO ☐ i. FIBER DRUM ☐ j. BAG ☐ k. BOX ☐ l. CYLINDER ☐ m. GLASS BOTTLE ☐ n. PLASTIC BOTTLE ☐ o. TOTE BIN ☐ p. TANK WAGON ☐ q. RAIL CAR ☐ r. OTHER

STORAGE PRESSURE 224: ☒ a. AMBIENT ☐ b. ABOVE AMBIENT ☐ c. BELOW AMBIENT

STORAGE TEMPERATURE 225: ☒ a. AMBIENT ☐ b. ABOVE AMBIENT ☐ c. BELOW AMBIENT ☐ d. CRYOGENIC

	%WT	HAZARDOUS COMPONENT (For mixture or waste only)	EHS	CAS #
1	12.5 (226)	Aqueous Ammonia (227)	☐ Yes ☒ No (228)	(229)
2	(230)	(231)	☐ Yes ☐ No (232)	(233)
3	(234)	(235)	☐ Yes ☐ No (236)	(237)
4	(238)	(239)	☐ Yes ☐ No (240)	(241)
5	(242)	(243)	☐ Yes ☐ No (244)	(245)

If more hazardous components are present at greater than 1% by weight if non-carcinogenic, or > 0.1% by weight if carcinogenic, attach additional sheets of paper capturing the required information.

ADDITIONAL LOCALLY COLLECTED INFORMATION 246

If EPCRA, Please Sign Here

San Bernardino County Fire Department • Hazardous Materials Division
HAZARDOUS MATERIALS INVENTORY – CHEMICAL DESCRIPTION

☒MATERIAL ☐WASTE — Page _10__ of _35__

I. FACILITY INFORMATION

BUSINESS NAME (Same as FACILITY NAME or DBA – Doing Business As) 3
Mojave Solar Project LLC

FACILITY ID # F A 1 | MAP# 203: 1-A | GRID# 204: E35, F31, C22

II. CHEMICAL INFORMATION

CHEMICAL NAME 205: Carbohydrazide
TRADE SECRET 206: ☐ Yes ☒ No — If Subject to EPCRA, refer to instructions
COMMON NAME 207: Carbohydrazide
EHS* 208: ☐ Yes ☒ No
CAS# 497-18-7 209
*If EHS is "Yes", all amounts below must be in lbs.

HAZARDOUS MATERIAL TYPE (Check one item only) 211: ☐ a. PURE ☒ b. MIXTURE ☐ c. WASTE
RADIOACTIVE 212: ☐ Yes ☒ No
CURIES 213:
PHYSICAL STATE (Check one item only) 214: ☐ a. SOLID ☒ b. LIQUID ☐ c. GAS
LARGEST CONTAINER 215: 300
FED HAZARD CATEGORIES (Check all that apply) 216: ☒ a. FIRE ☐ b. REACTIVE ☐ c. PRESSURE RELEASE ☐ d. ACUTE HEALTH ☐ e. CHRONIC HEALTH

AVERAGE DAILY AMOUNT 217	MAXIMUM DAILY AMOUNT 218	ANNUAL WASTE AMOUNT 219	STATE WASTE CODE 220
600	1200		

UNITS* (Check one item only) 221: ☒ a. GALLONS ☐ b. CUBIC FEET ☐ c. POUNDS ☐ d. TONS
* If EHS, amount must be in pounds.
DAYS ON SITE: 222: 365

STORAGE CONTAINER 223:
☒ a. ABOVE GROUND TANK ☐ b. UNDERGROUND TANK ☐ c. TANK INSIDE BUILDING ☐ d. STEEL DRUM ☐ e. PLASTIC/NONMETALLIC DRUM ☐ f. CAN ☐ g. CARBOY ☐ h. SILO ☐ i. FIBER DRUM ☐ j. BAG ☐ k. BOX ☐ l. CYLINDER ☐ m. GLASS BOTTLE ☐ n. PLASTIC BOTTLE ☐ o. TOTE BIN ☐ p. TANK WAGON ☐ q. RAIL CAR ☐ r. OTHER

STORAGE PRESSURE 224: ☒ a. AMBIENT ☐ b. ABOVE AMBIENT ☐ c. BELOW AMBIENT

STORAGE TEMPERATURE 225: ☒ a. AMBIENT ☐ b. ABOVE AMBIENT ☐ c. BELOW AMBIENT ☐ d. CRYOGENIC

	%WT	HAZARDOUS COMPONENT (For mixture or waste only)	EHS	CAS #
1	100 226	Carbohydrazide 227	☐ Yes ☒ No 228	497-18-7 229
2	230	231	☐ Yes ☐ No 232	233
3	234	235	☐ Yes ☐ No 236	237
4	238	239	☐ Yes ☐ No 240	241
5	242	243	☐ Yes ☐ No 244	245

If more hazardous components are present at greater than 1% by weight if non-carcinogenic, or > 0.1% by weight if carcinogenic, attach additional sheets of paper capturing the required information.

ADDITIONAL LOCALLY COLLECTED INFORMATION 246

San Bernardino County Fire Department • Hazardous Materials Division
HAZARDOUS MATERIALS INVENTORY – CHEMICAL DESCRIPTION

☒MATERIAL ☐WASTE Page _11__ of _35__

I. FACILITY INFORMATION

BUSINESS NAME (Same as FACILITY NAME or DBA – Doing Business As) 3
Mojave Solar Project LLC

FACILITY ID #	F	A								1	MAP# 203	GRID# 204
											1-A	E35, F31, C22

II. CHEMICAL INFORMATION

CHEMICAL NAME 205: Trisodium Phosphate Solution

TRADE SECRET ☐ Yes ☒ No 206 (If Subject to EPCRA, refer to instructions)

COMMON NAME 207: TSP Solution

EHS* ☐ Yes ☒ No 208

CAS# 7601-54-9 209

*If EHS is "Yes", all amounts below must be in lbs.

HAZARDOUS MATERIAL TYPE (Check one item only) ☒ a. PURE ☐ b. MIXTURE ☐ c. WASTE 211

RADIOACTIVE ☐ Yes ☒ No 212

CURIES 213

PHYSICAL STATE (Check one item only) ☐ a. SOLID ☒ b. LIQUID ☐ c. GAS 214

LARGEST CONTAINER 215: 200 gal

FED HAZARD CATEGORIES (Check all that apply) 216
☐ a. FIRE ☐ b. REACTIVE ☐ c. PRESSURE RELEASE ☐ d. ACUTE HEALTH ☐ e. CHRONIC HEALTH

AVERAGE DAILY AMOUNT 217	MAXIMUM DAILY AMOUNT 218	ANNUAL WASTE AMOUNT 219	STATE WASTE CODE 220
200	250		

UNITS* (Check one item only) ☒ a. GALLONS ☐ b. CUBIC FEET ☐ c. POUNDS ☐ d. TONS 221
* If EHS, amount must be in pounds.

DAYS ON SITE: 365 222

STORAGE CONTAINER 223
☒ a. ABOVE GROUND TANK ☐ b. UNDERGROUND TANK ☐ c. TANK INSIDE BUILDING ☐ d. STEEL DRUM ☐ e. PLASTIC/NONMETALLIC DRUM ☐ f. CAN ☐ g. CARBOY ☐ h. SILO ☐ i. FIBER DRUM ☐ j. BAG ☐ k. BOX ☐ l. CYLINDER ☐ m. GLASS BOTTLE ☐ n. PLASTIC BOTTLE ☐ o. TOTE BIN ☐ p. TANK WAGON ☐ q. RAIL CAR ☐ r. OTHER

STORAGE PRESSURE 224: ☒ a. AMBIENT ☐ b. ABOVE AMBIENT ☐ c. BELOW AMBIENT

STORAGE TEMPERATURE 225: ☒ a. AMBIENT ☐ b. ABOVE AMBIENT ☐ c. BELOW AMBIENT ☐ d. CRYOGENIC

	%WT	HAZARDOUS COMPONENT (For mixture or waste only)	EHS	CAS #
1	100 226	Tri Sodium Phosphate 227	☐ Yes ☒ No 228	7601-54-9 229
2	230	231	☐ Yes ☐ No 232	233
3	234	235	☐ Yes ☐ No 236	237
4	238	239	☐ Yes ☐ No 240	241
5	242	243	☐ Yes ☐ No 244	245

If more hazardous components are present at greater than 1% by weight if non-carcinogenic, or > 0.1% by weight if carcinogenic, attach additional sheets of paper capturing the required information.

ADDITIONAL LOCALLY COLLECTED INFORMATION 246

San Bernardino County Fire Department • Hazardous Materials Division
HAZARDOUS MATERIALS INVENTORY – CHEMICAL DESCRIPTION

☒MATERIAL ☐WASTE — Page _12__ of _35__

I. FACILITY INFORMATION

BUSINESS NAME (Same as FACILITY NAME or DBA – Doing Business As) 3

Mojave Solar Project LLC

FACILITY ID #	F	A								1	MAP# 203	GRID# 204
											1-A	E35, F31, C22

II. CHEMICAL INFORMATION

CHEMICAL NAME 205	TRADE SECRET ☐ Yes ☒ No 206
Phosphoric Acid – 60 - 70%	If Subject to EPCRA, refer to instructions
COMMON NAME 207	EHS* ☐ Yes ☒ No 208
Phosphoric Acid	
CAS# 7664-38-2 209	*If EHS is "Yes", all amounts below must be in lbs.

HAZARDOUS MATERIAL TYPE (Check one item only) ☐ a. PURE ☒ b. MIXTURE ☐ c. WASTE 211	RADIOACTIVE ☐ Yes ☒ No 212	CURIES 213
PHYSICAL STATE (Check one item only) ☐ a. SOLID ☒ b. LIQUID ☐ c. GAS 214	LARGEST CONTAINER 330 gal	215

FED HAZARD CATEGORIES (Check all that apply) 216
☐ a. FIRE ☒ b. REACTIVE ☐ c. PRESSURE RELEASE ☒ d. ACUTE HEALTH ☐ e. CHRONIC HEALTH

AVERAGE DAILY AMOUNT 217	MAXIMUM DAILY AMOUNT 218	ANNUAL WASTE AMOUNT 219	STATE WASTE CODE 220
450	660		

UNITS* (Check one item only) 221 ☒ a. GALLONS ☐ b. CUBIC FEET ☐ c. POUNDS ☐ d. TONS
* If EHS, amount must be in pounds.

DAYS ON SITE: 365 222

STORAGE CONTAINER 223
☒ a. ABOVE GROUND TANK ☐ b. UNDERGROUND TANK ☐ c. TANK INSIDE BUILDING ☐ d. STEEL DRUM ☐ e. PLASTIC/NONMETALLIC DRUM ☐ f. CAN ☐ g. CARBOY ☐ h. SILO ☐ i. FIBER DRUM ☐ j. BAG ☐ k. BOX ☐ l. CYLINDER ☐ m. GLASS BOTTLE ☐ n. PLASTIC BOTTLE ☒ o. TOTE BIN ☐ p. TANK WAGON ☐ q. RAIL CAR ☐ r. OTHER

STORAGE PRESSURE 224 ☒ a. AMBIENT ☐ b. ABOVE AMBIENT ☐ c. BELOW AMBIENT

STORAGE TEMPERATURE 225 ☒ a. AMBIENT ☐ b. ABOVE AMBIENT ☐ c. BELOW AMBIENT ☐ d. CRYOGENIC

	%WT	HAZARDOUS COMPONENT (For mixture or waste only)	EHS	CAS #
1	65 226	Phosphoric Acid 227	☐ Yes ☒ No 228	7664-38-2 229
2	230	231	☐ Yes ☐ No 232	233
3	234	235	☐ Yes ☐ No 236	237
4	238	239	☐ Yes ☐ No 240	241
5	242	243	☐ Yes ☐ No 244	245

If more hazardous components are present at greater than 1% by weight if non-carcinogenic, or > 0.1% by weight if carcinogenic, attach additional sheets of paper capturing the required information.

ADDITIONAL LOCALLY COLLECTED INFORMATION 246

San Bernardino County Fire Department • Hazardous Materials Division
HAZARDOUS MATERIALS INVENTORY – CHEMICAL DESCRIPTION

☒MATERIAL ☐WASTE — Page _13__ of _35__

I. FACILITY INFORMATION

BUSINESS NAME (Same as FACILITY NAME or DBA – Doing Business As) 3
Mojave Solar Project LLC

FACILITY ID # F A | 1 | MAP# 203: 1-A | GRID# 204: E35, F31, C22

II. CHEMICAL INFORMATION

CHEMICAL NAME 205: Sodium Bisulfite – 38%

TRADE SECRET ☐ Yes ☒ No 206
If Subject to EPCRA, refer to instructions

COMMON NAME 207: Sodium Bisulfite

EHS* ☐ Yes ☒ No 208

CAS# 7631-90-5 209

*If EHS is "Yes", all amounts below must be in lbs.

HAZARDOUS MATERIAL TYPE (Check one item only) ☐ a. PURE ☒ b. MIXTURE ☐ c. WASTE 211

RADIOACTIVE ☐ Yes ☒ No 212

CURIES 213

PHYSICAL STATE (Check one item only) ☐ a. SOLID ☒ b. LIQUID ☐ c. GAS 214

LARGEST CONTAINER 330 215

FED HAZARD CATEGORIES (Check all that apply) 216
☐ a. FIRE ☐ b. REACTIVE ☐ c. PRESSURE RELEASE ☐ d. ACUTE HEALTH ☒ e. CHRONIC HEALTH

AVERAGE DAILY AMOUNT 217	MAXIMUM DAILY AMOUNT 218	ANNUAL WASTE AMOUNT 219	STATE WASTE CODE 220
400	660		

UNITS* (Check one item only) 221
☒ a. GALLONS ☐ b. CUBIC FEET ☐ c. POUNDS ☐ d. TONS
* If EHS, amount must be in pounds.

DAYS ON SITE: 365 222

STORAGE CONTAINER 223
☒ a. ABOVE GROUND TANK ☐ b. UNDERGROUND TANK ☐ c. TANK INSIDE BUILDING ☐ d. STEEL DRUM ☐ e. PLASTIC/NONMETALLIC DRUM ☐ f. CAN ☐ g. CARBOY ☐ h. SILO ☐ i. FIBER DRUM ☐ j. BAG ☐ k. BOX ☐ l. CYLINDER ☐ m. GLASS BOTTLE ☐ n. PLASTIC BOTTLE ☐ o. TOTE BIN ☐ p. TANK WAGON ☐ q. RAIL CAR ☐ r. OTHER

STORAGE PRESSURE 224
☒ a. AMBIENT ☐ b. ABOVE AMBIENT ☐ c. BELOW AMBIENT

STORAGE TEMPERATURE 225
☒ a. AMBIENT ☐ b. ABOVE AMBIENT ☐ c. BELOW AMBIENT ☐ d. CRYOGENIC

	%WT	HAZARDOUS COMPONENT (For mixture or waste only)	EHS	CAS #
1	38 226	Sodium Bisulfite 227	☐ Yes ☒ No 228	7631-90-5 229
2	230	231	☐ Yes ☐ No 232	233
3	234	235	☐ Yes ☐ No 236	237
4	238	239	☐ Yes ☐ No 240	241
5	242	243	☐ Yes ☐ No 244	245

If more hazardous components are present at greater than 1% by weight if non-carcinogenic, or > 0.1% by weight if carcinogenic, attach additional sheets of paper capturing the required information.

ADDITIONAL LOCALLY COLLECTED INFORMATION 246

If EPCRA, Please Sign Here

San Bernardino County Fire Department • Hazardous Materials Division
HAZARDOUS MATERIALS INVENTORY – CHEMICAL DESCRIPTION

☒MATERIAL ☐WASTE — Page _14__ of _35__

I. FACILITY INFORMATION

BUSINESS NAME (Same as FACILITY NAME or DBA – Doing Business As) 3
Mojave Solar Project LLC

FACILITY ID #	F	A								1	MAP# 203	GRID# 204
											1-A	E35, F31, C22

II. CHEMICAL INFORMATION

CHEMICAL NAME 205: Sodium Hypochlorite – 12.5%

TRADE SECRET 206: ☐ Yes ☒ No
If Subject to EPCRA, refer to instructions

COMMON NAME 207: Sodium Hypochlorite

EHS* 208: ☐ Yes ☒ No

CAS# 7681-52-9 209

*If EHS is "Yes", all amounts below must be in lbs.

HAZARDOUS MATERIAL TYPE (Check one item only) 211: ☐ a. PURE ☒ b. MIXTURE ☐ c. WASTE

RADIOACTIVE 212: ☐ Yes ☒ No

CURIES 213:

PHYSICAL STATE (Check one item only) 214: ☐ a. SOLID ☒ b. LIQUID ☐ c. GAS

LARGEST CONTAINER 215: 330

FED HAZARD CATEGORIES (Check all that apply) 216: ☐ a. FIRE ☒ b. REACTIVE ☐ c. PRESSURE RELEASE ☐ d. ACUTE HEALTH ☒ e. CHRONIC HEALTH

AVERAGE DAILY AMOUNT 217	MAXIMUM DAILY AMOUNT 218	ANNUAL WASTE AMOUNT 219	STATE WASTE CODE 220
4000	5280		

UNITS* (Check one item only) 221: ☒ a. GALLONS ☐ b. CUBIC FEET ☐ c. POUNDS ☐ d. TONS
* If EHS, amount must be in pounds.

DAYS ON SITE: 222: 365

STORAGE CONTAINER 223:
☒ a. ABOVE GROUND TANK ☐ b. UNDERGROUND TANK ☐ c. TANK INSIDE BUILDING ☐ d. STEEL DRUM ☐ e. PLASTIC/NONMETALLIC DRUM ☐ f. CAN ☐ g. CARBOY ☐ h. SILO ☐ i. FIBER DRUM ☐ j. BAG ☐ k. BOX ☐ l. CYLINDER ☐ m. GLASS BOTTLE ☐ n. PLASTIC BOTTLE ☒ o. TOTE BIN ☐ p. TANK WAGON ☐ q. RAIL CAR ☐ r. OTHER

STORAGE PRESSURE 224: ☒ a. AMBIENT ☐ b. ABOVE AMBIENT ☐ c. BELOW AMBIENT

STORAGE TEMPERATURE 225: ☒ a. AMBIENT ☐ b. ABOVE AMBIENT ☐ c. BELOW AMBIENT ☐ d. CRYOGENIC

	%WT	HAZARDOUS COMPONENT (For mixture or waste only)	EHS	CAS #
1	12.5 226	Sodium Hypochlorite 227	☐ Yes ☒ No 228	7681-52-9 229
2	230	231	☐ Yes ☐ No 232	233
3	234	235	☐ Yes ☐ No 236	237
4	238	239	☐ Yes ☐ No 240	241
5	242	243	☐ Yes ☐ No 244	245

If more hazardous components are present at greater than 1% by weight if non-carcinogenic, or > 0.1% by weight if carcinogenic, attach additional sheets of paper capturing the required information.

ADDITIONAL LOCALLY COLLECTED INFORMATION 246

If EPCRA, Please Sign Here

San Bernardino County Fire Department • Hazardous Materials Division
HAZARDOUS MATERIALS INVENTORY – CHEMICAL DESCRIPTION

☒MATERIAL ☐WASTE — Page _15__ of _35_

I. FACILITY INFORMATION

BUSINESS NAME (Same as FACILITY NAME or DBA – Doing Business As) 3
Mojave Solar Project LLC

FACILITY ID #	F	A								1	MAP# 203	GRID# 204
											1-A	E35, F31, C22

II. CHEMICAL INFORMATION

CHEMICAL NAME 205: Magnesium Sulfate – 27%

TRADE SECRET 206: ☐ Yes ☒ No
If Subject to EPCRA, refer to instructions

COMMON NAME 207: Magnesium Sulfate

EHS* 208: ☐ Yes ☒ No

CAS# 7487-88-9 209

*If EHS is "Yes", all amounts below must be in lbs.

HAZARDOUS MATERIAL TYPE (Check one item only) 211: ☐ a. PURE ☒ b. MIXTURE ☐ c. WASTE

RADIOACTIVE 212: ☐ Yes ☒ No

CURIES 213:

PHYSICAL STATE (Check one item only) 214: ☐ a. SOLID ☒ b. LIQUID ☐ c. GAS

LARGEST CONTAINER 215: 7660 gallon silo

FED HAZARD CATEGORIES (Check all that apply) 216: ☐ a. FIRE ☐ b. REACTIVE ☐ c. PRESSURE RELEASE ☐ d. ACUTE HEALTH ☐ e. CHRONIC HEALTH

AVERAGE DAILY AMOUNT 217	MAXIMUM DAILY AMOUNT 218	ANNUAL WASTE AMOUNT 219	STATE WASTE CODE 220
10000	15320		

UNITS* (Check one item only) 221: ☒ a. GALLONS ☐ b. CUBIC FEET ☐ c. POUNDS ☐ d. TONS
* If EHS, amount must be in pounds.

DAYS ON SITE: 222: 365

STORAGE CONTAINER 223:
☐ a. ABOVE GROUND TANK ☐ e. PLASTIC/NONMETALLIC DRUM ☐ i. FIBER DRUM ☐ m. GLASS BOTTLE ☐ q. RAIL CAR
☐ b. UNDERGROUND TANK ☐ f. CAN ☐ j. BAG ☐ n. PLASTIC BOTTLE ☐ r. OTHER
☐ c. TANK INSIDE BUILDING ☐ g. CARBOY ☐ k. BOX ☐ o. TOTE BIN
☐ d. STEEL DRUM ☒ h. SILO ☐ l. CYLINDER ☐ p. TANK WAGON

STORAGE PRESSURE 224: ☒ a. AMBIENT ☐ b. ABOVE AMBIENT ☐ c. BELOW AMBIENT

STORAGE TEMPERATURE 225: ☒ a. AMBIENT ☐ b. ABOVE AMBIENT ☐ c. BELOW AMBIENT ☐ d. CRYOGENIC

%WT	HAZARDOUS COMPONENT (For mixture or waste only)	EHS	CAS #
1 27 226	Magnesium Sulfate 227	☐ Yes ☒ No 228	7487-88-9 229
2 230	231	☐ Yes ☐ No 232	233
3 234	235	☐ Yes ☐ No 236	237
4 238	239	☐ Yes ☐ No 240	241
5 242	243	☐ Yes ☐ No 244	245

If more hazardous components are present at greater than 1% by weight if non-carcinogenic, or > 0.1% by weight if carcinogenic, attach additional sheets of paper capturing the required information.

ADDITIONAL LOCALLY COLLECTED INFORMATION 246

If EPCRA, Please Sign Here

San Bernardino County Fire Department • Hazardous Materials Division
HAZARDOUS MATERIALS INVENTORY – CHEMICAL DESCRIPTION

☒MATERIAL ☐WASTE — Page _16__ of _35__

I. FACILITY INFORMATION

BUSINESS NAME (Same as FACILITY NAME or DBA – Doing Business As) 3
Mojave Solar Project LLC

FACILITY ID #	F	A								1	MAP# 203	GRID# 204
											1-A	E35, F31, C22

II. CHEMICAL INFORMATION

CHEMICAL NAME 205	TRADE SECRET ☐ Yes ☒ No 206
Calcium Hydroxide - Slaked Lime	If Subject to EPCRA, refer to instructions
COMMON NAME 207	EHS* ☐ Yes ☒ No 208
Lime	
CAS# 1305-62-0 209	*If EHS is "Yes", all amounts below must be in lbs.

HAZARDOUS MATERIAL TYPE (Check one item only) ☐ a. PURE ☒ b. MIXTURE ☐ c. WASTE 211	RADIOACTIVE ☐ Yes ☒ No 212	CURIES 213
PHYSICAL STATE (Check one item only) ☒ a. SOLID ☐ b. LIQUID ☐ c. GAS 214	LARGEST CONTAINER 21664 gallon silo 215	

FED HAZARD CATEGORIES (Check all that apply) 216
☐ a. FIRE ☐ b. REACTIVE ☐ c. PRESSURE RELEASE ☐ d. ACUTE HEALTH ☐ e. CHRONIC HEALTH

AVERAGE DAILY AMOUNT 217	MAXIMUM DAILY AMOUNT 218	ANNUAL WASTE AMOUNT 219	STATE WASTE CODE 220
35000	43328		

UNITS* (Check one item only) 221 ☐ a. GALLONS ☐ b. CUBIC FEET ☒ c. POUNDS ☐ d. TONS
* If EHS, amount must be in pounds.

DAYS ON SITE: 365 222

STORAGE CONTAINER 223
☐ a. ABOVE GROUND TANK ☐ b. UNDERGROUND TANK ☐ c. TANK INSIDE BUILDING ☐ d. STEEL DRUM
☐ e. PLASTIC/NONMETALLIC DRUM ☐ f. CAN ☐ g. CARBOY ☒ h. SILO
☐ i. FIBER DRUM ☐ j. BAG ☐ k. BOX ☐ l. CYLINDER
☐ m. GLASS BOTTLE ☐ n. PLASTIC BOTTLE ☐ o. TOTE BIN ☐ p. TANK WAGON
☐ q. RAIL CAR ☒ r. OTHER

STORAGE PRESSURE 224 ☒ a. AMBIENT ☐ b. ABOVE AMBIENT ☐ c. BELOW AMBIENT

STORAGE TEMPERATURE 225 ☒ a. AMBIENT ☐ b. ABOVE AMBIENT ☐ c. BELOW AMBIENT ☐ d. CRYOGENIC

%WT	HAZARDOUS COMPONENT (For mixture or waste only)	EHS	CAS #
1 226	Slaked Lime 227	☐ Yes ☒ No 228	1305-62-0 229
2 230	231	☐ Yes ☐ No 232	233
3 234	235	☐ Yes ☐ No 236	237
4 238	239	☐ Yes ☐ No 240	241
5 242	243	☐ Yes ☐ No 244	245

If more hazardous components are present at greater than 1% by weight if non-carcinogenic, or > 0.1% by weight if carcinogenic, attach additional sheets of paper capturing the required information.

ADDITIONAL LOCALLY COLLECTED INFORMATION 246

If EPCRA, Please Sign Here

San Bernardino County Fire Department • Hazardous Materials Division
HAZARDOUS MATERIALS INVENTORY – CHEMICAL DESCRIPTION

☒MATERIAL ☐WASTE — Page _17__ of _35__

I. FACILITY INFORMATION

BUSINESS NAME (Same as FACILITY NAME or DBA – Doing Business As) 3
Mojave Solar Project LLC

FACILITY ID #	F	A								1	MAP# 203	GRID# 204
											1-A	E35, F31, C22

II. CHEMICAL INFORMATION

CHEMICAL NAME 205: 95% Sodium Carbonate

TRADE SECRET 206: ☐ Yes ☒ No
If Subject to EPCRA, refer to instructions

COMMON NAME 207: Soda Ash

EHS* 208: ☐ Yes ☒ No

CAS# 16482-55-6 209

*If EHS is "Yes", all amounts below must be in lbs.

HAZARDOUS MATERIAL TYPE (Check one item only) 211: ☐ a. PURE ☒ b. MIXTURE ☐ c. WASTE

RADIOACTIVE 212: ☐ Yes ☒ No

CURIES 213:

PHYSICAL STATE (Check one item only) 214: ☒ a. SOLID ☐ b. LIQUID ☐ c. GAS

LARGEST CONTAINER 215: 7660 gallon silo

FED HAZARD CATEGORIES (Check all that apply) 216: ☐ a. FIRE ☐ b. REACTIVE ☐ c. PRESSURE RELEASE ☐ d. ACUTE HEALTH ☐ e. CHRONIC HEALTH

AVERAGE DAILY AMOUNT 217	MAXIMUM DAILY AMOUNT 218	ANNUAL WASTE AMOUNT 219	STATE WASTE CODE 220
10000	15320		

UNITS* (Check one item only) 221: ☒ a. GALLONS ☐ b. CUBIC FEET ☐ c. POUNDS ☐ d. TONS
* If EHS, amount must be in pounds.

DAYS ON SITE: 222: 365

STORAGE CONTAINER 223:
☐ a. ABOVE GROUND TANK ☐ e. PLASTIC/NONMETALLIC DRUM ☐ i. FIBER DRUM ☐ m. GLASS BOTTLE ☐ q. RAIL CAR
☐ b. UNDERGROUND TANK ☐ f. CAN ☐ j. BAG ☐ n. PLASTIC BOTTLE ☒ r. OTHER
☐ c. TANK INSIDE BUILDING ☐ g. CARBOY ☐ k. BOX ☐ o. TOTE BIN
☐ d. STEEL DRUM ☒ h. SILO ☐ l. CYLINDER ☐ p. TANK WAGON

STORAGE PRESSURE 224: ☒ a. AMBIENT ☐ b. ABOVE AMBIENT ☐ c. BELOW AMBIENT

STORAGE TEMPERATURE 225: ☒ a. AMBIENT ☐ b. ABOVE AMBIENT ☐ c. BELOW AMBIENT ☐ d. CRYOGENIC

	%WT	HAZARDOUS COMPONENT (For mixture or waste only)	EHS	CAS #
1	95 226	Sodium Carbonate 227	☐ Yes ☒ No 228	16482-55-6 229
2	230	231	☐ Yes ☐ No 232	233
3	234	235	☐ Yes ☐ No 236	237
4	238	239	☐ Yes ☐ No 240	241
5	242	243	☐ Yes ☐ No 244	245

If more hazardous components are present at greater than 1% by weight if non-carcinogenic, or > 0.1% by weight if carcinogenic, attach additional sheets of paper capturing the required information.

ADDITIONAL LOCALLY COLLECTED INFORMATION 246

If EPCRA, Please Sign Here

San Bernardino County Fire Department • Hazardous Materials Division
HAZARDOUS MATERIALS INVENTORY – CHEMICAL DESCRIPTION

☒MATERIAL ☐WASTE — Page _18__ of _35__

I. FACILITY INFORMATION

BUSINESS NAME (Same as FACILITY NAME or DBA – Doing Business As) 3
Mojave Solar Project LLC

FACILITY ID #	F	A								1	MAP# 203	GRID# 204
											1-A	E35, F31, C22

II. CHEMICAL INFORMATION

CHEMICAL NAME 205	TRADE SECRET ☐ Yes ☒ No 206
Anionic Flocculant	If Subject to EPCRA, refer to instructions
COMMON NAME 207	EHS* ☐ Yes ☒ No 208
Flocculant	
CAS# 209	*If EHS is "Yes", all amounts below must be in lbs.

HAZARDOUS MATERIAL TYPE (Check one item only)	RADIOACTIVE	CURIES
☐ a. PURE ☒ b. MIXTURE ☐ c. WASTE 211	☐ Yes ☒ No 212	213
PHYSICAL STATE (Check one item only)	LARGEST CONTAINER	215
☒ a. SOLID ☐ b. LIQUID ☐ c. GAS 214	330 gal	

FED HAZARD CATEGORIES (Check all that apply) 216
☐ a. FIRE ☐ b. REACTIVE ☐ c. PRESSURE RELEASE ☐ d. ACUTE HEALTH ☐ e. CHRONIC HEALTH

AVERAGE DAILY AMOUNT 217	MAXIMUM DAILY AMOUNT 218	ANNUAL WASTE AMOUNT 219	STATE WASTE CODE 220
450	660		

UNITS* (Check one item only) 221	DAYS ON SITE: 222
☒ a. GALLONS ☐ b. CUBIC FEET ☐ c. POUNDS ☐ d. TONS * If EHS, amount must be in pounds.	365

STORAGE CONTAINER 223
☐ a. ABOVE GROUND TANK ☐ e. PLASTIC/NONMETALLIC DRUM ☐ i. FIBER DRUM ☐ m. GLASS BOTTLE ☐ q. RAIL CAR
☐ b. UNDERGROUND TANK ☐ f. CAN ☐ j. BAG ☐ n. PLASTIC BOTTLE ☒ r. OTHER
☐ c. TANK INSIDE BUILDING ☐ g. CARBOY ☐ k. BOX ☒ o. TOTE BIN
☐ d. STEEL DRUM ☐ h. SILO ☐ l. CYLINDER ☐ p. TANK WAGON

STORAGE PRESSURE 224
☒ a. AMBIENT ☐ b. ABOVE AMBIENT ☐ c. BELOW AMBIENT

STORAGE TEMPERATURE 225
☒ a. AMBIENT ☐ b. ABOVE AMBIENT ☐ c. BELOW AMBIENT ☐ d. CRYOGENIC

	%WT	HAZARDOUS COMPONENT (For mixture or waste only)	EHS	CAS #
1	226	Anionic Flocculant 227	☐ Yes ☒ No 228	229
2	230	231	☐ Yes ☐ No 232	233
3	234	235	☐ Yes ☐ No 236	237
4	238	239	☐ Yes ☐ No 240	241
5	242	243	☐ Yes ☐ No 244	245

If more hazardous components are present at greater than 1% by weight if non-carcinogenic, or > 0.1% by weight if carcinogenic, attach additional sheets of paper capturing the required information.

ADDITIONAL LOCALLY COLLECTED INFORMATION 246

If EPCRA, Please Sign Here

San Bernardino County Fire Department • Hazardous Materials Division
HAZARDOUS MATERIALS INVENTORY – CHEMICAL DESCRIPTION

☒MATERIAL ☐WASTE — Page _19__ of _35__

I. FACILITY INFORMATION

BUSINESS NAME (Same as FACILITY NAME or DBA – Doing Business As) 3
Mojave Solar Project LLC

FACILITY ID #	F	A								1	MAP# 203	GRID# 204
											1-A	E35, F31, C22

II. CHEMICAL INFORMATION

CHEMICAL NAME 205: Ferric Chloride – 40%

TRADE SECRET 206: ☐ Yes ☒ No
If Subject to EPCRA, refer to instructions

COMMON NAME 207: Ferric Chloride

EHS* 208: ☐ Yes ☒ No

CAS# 7705-08-0 209

*If EHS is "Yes", all amounts below must be in lbs.

HAZARDOUS MATERIAL TYPE (Check one item only) 211: ☐ a. PURE ☒ b. MIXTURE ☐ c. WASTE

RADIOACTIVE 212: ☐ Yes ☒ No

CURIES 213:

PHYSICAL STATE (Check one item only) 214: ☐ a. SOLID ☒ b. LIQUID ☐ c. GAS

LARGEST CONTAINER 215: 330 gal

FED HAZARD CATEGORIES (Check all that apply) 216: ☐ a. FIRE ☐ b. REACTIVE ☐ c. PRESSURE RELEASE ☐ d. ACUTE HEALTH ☒ e. CHRONIC HEALTH

AVERAGE DAILY AMOUNT 217	MAXIMUM DAILY AMOUNT 218	ANNUAL WASTE AMOUNT 219	STATE WASTE CODE 220
450	660		

UNITS* (Check one item only) 221: ☒ a. GALLONS ☐ b. CUBIC FEET ☐ c. POUNDS ☐ d. TONS
* If EHS, amount must be in pounds.

DAYS ON SITE: 222: 365

STORAGE CONTAINER 223:
☐ a. ABOVE GROUND TANK ☐ e. PLASTIC/NONMETALLIC DRUM ☐ i. FIBER DRUM ☐ m. GLASS BOTTLE ☐ q. RAIL CAR
☐ b. UNDERGROUND TANK ☐ f. CAN ☐ j. BAG ☐ n. PLASTIC BOTTLE ☐ r. OTHER
☐ c. TANK INSIDE BUILDING ☐ g. CARBOY ☐ k. BOX ☒ o. TOTE BIN
☐ d. STEEL DRUM ☐ h. SILO ☐ l. CYLINDER ☐ p. TANK WAGON

STORAGE PRESSURE 224: ☒ a. AMBIENT ☐ b. ABOVE AMBIENT ☐ c. BELOW AMBIENT

STORAGE TEMPERATURE 225: ☒ a. AMBIENT ☐ b. ABOVE AMBIENT ☐ c. BELOW AMBIENT ☐ d. CRYOGENIC

	%WT	HAZARDOUS COMPONENT (For mixture or waste only)	EHS	CAS #
1	40 226	Ferric Chloride 227	☐ Yes ☒ No 228	7705-08-0 229
2	230	231	☐ Yes ☐ No 232	233
3	234	235	☐ Yes ☐ No 236	237
4	238	239	☐ Yes ☐ No 240	241
5	242	243	☐ Yes ☐ No 244	245

If more hazardous components are present at greater than 1% by weight if non-carcinogenic, or > 0.1% by weight if carcinogenic, attach additional sheets of paper capturing the required information.

ADDITIONAL LOCALLY COLLECTED INFORMATION 246

If EPCRA, Please Sign Here

5

San Bernardino County Fire Department • Hazardous Materials Division
HAZARDOUS MATERIALS INVENTORY – CHEMICAL DESCRIPTION

☒MATERIAL ☐WASTE — Page _20__ of _35__

I. FACILITY INFORMATION

BUSINESS NAME (Same as FACILITY NAME or DBA – Doing Business As) 3
Mojave Solar Project LLC

FACILITY ID # F A — 1 — MAP# 203: 1-A — GRID# 204: E35, F31, C22

II. CHEMICAL INFORMATION

CHEMICAL NAME 205: Sodium Bisulfite – 35%

TRADE SECRET ☐ Yes ☒ No 206
If Subject to EPCRA, refer to instructions

COMMON NAME 207: Sodium Bisulfite

EHS* ☐ Yes ☒ No 208

CAS# 7631-90-5 209

*If EHS is "Yes", all amounts below must be in lbs.

HAZARDOUS MATERIAL TYPE (Check one item only) 211: ☐ a. PURE ☒ b. MIXTURE ☐ c. WASTE

RADIOACTIVE ☐ Yes ☒ No 212

CURIES 213

PHYSICAL STATE (Check one item only) 214: ☐ a. SOLID ☒ b. LIQUID ☐ c. GAS

LARGEST CONTAINER 215: 330 gallon

FED HAZARD CATEGORIES (Check all that apply) 216: ☐ a. FIRE ☐ b. REACTIVE ☐ c. PRESSURE RELEASE ☐ d. ACUTE HEALTH ☒ e. CHRONIC HEALTH

AVERAGE DAILY AMOUNT 217	MAXIMUM DAILY AMOUNT 218	ANNUAL WASTE AMOUNT 219	STATE WASTE CODE 220
450	660		

UNITS* (Check one item only) 221: ☐ a. GALLONS ☐ b. CUBIC FEET ☐ c. POUNDS ☐ d. TONS
* If EHS, amount must be in pounds.

DAYS ON SITE: 222: 365

STORAGE CONTAINER 223:
☐ a. ABOVE GROUND TANK ☐ e. PLASTIC/NONMETALLIC DRUM ☐ i. FIBER DRUM ☐ m. GLASS BOTTLE ☐ q. RAIL CAR
☐ b. UNDERGROUND TANK ☐ f. CAN ☐ j. BAG ☐ n. PLASTIC BOTTLE ☐ r. OTHER
☐ c. TANK INSIDE BUILDING ☐ g. CARBOY ☐ k. BOX ☒ o. TOTE BIN
☐ d. STEEL DRUM ☐ h. SILO ☐ l. CYLINDER ☐ p. TANK WAGON

STORAGE PRESSURE 224: ☒ a. AMBIENT ☐ b. ABOVE AMBIENT ☐ c. BELOW AMBIENT

STORAGE TEMPERATURE 225: ☒ a. AMBIENT ☐ b. ABOVE AMBIENT ☐ c. BELOW AMBIENT ☐ d. CRYOGENIC

	%WT	HAZARDOUS COMPONENT (For mixture or waste only)	EHS	CAS #
1	35 226	Sodium Bisulfite 227	☐ Yes ☒ No 228	7631-90-5 229
2	230	231	☐ Yes ☐ No 232	233
3	234	235	☐ Yes ☐ No 236	237
4	238	239	☐ Yes ☐ No 240	241
5	242	243	☐ Yes ☐ No 244	245

If more hazardous components are present at greater than 1% by weight if non-carcinogenic, or > 0.1% by weight if carcinogenic, attach additional sheets of paper capturing the required information.

ADDITIONAL LOCALLY COLLECTED INFORMATION 246

If EPCRA, Please Sign Here

)

San Bernardino County Fire Department • Hazardous Materials Division
HAZARDOUS MATERIALS INVENTORY – CHEMICAL DESCRIPTION

☒MATERIAL ☐WASTE — Page _21__ of _35__

I. FACILITY INFORMATION

BUSINESS NAME (Same as FACILITY NAME or DBA – Doing Business As) 3
Mojave Solar Project LLC

FACILITY ID # F A 1 | MAP# 203: 1-A | GRID# 204: E35, F31, C22

II. CHEMICAL INFORMATION

CHEMICAL NAME 205: Phosphoric Acid
TRADE SECRET ☐ Yes ☒ No 206
If Subject to EPCRA, refer to instructions

COMMON NAME 207: Phosphoric Acid
EHS* ☐ Yes ☒ No 208

CAS#7664-38-2 209
*If EHS is "Yes", all amounts below must be in lbs.

HAZARDOUS MATERIAL TYPE (Check one item only) ☐ a. PURE ☒ b. MIXTURE ☐ c. WASTE 211
RADIOACTIVE ☐ Yes ☒ No 212
CURIES 213

PHYSICAL STATE (Check one item only) ☐ a. SOLID ☒ b. LIQUID ☐ c. GAS 214
LARGEST CONTAINER 330 gallon 215

FED HAZARD CATEGORIES (Check all that apply) ☐ a. FIRE ☒ b. REACTIVE ☐ c. PRESSURE RELEASE ☒ d. ACUTE HEALTH ☒ e. CHRONIC HEALTH 216

AVERAGE DAILY AMOUNT 217	MAXIMUM DAILY AMOUNT 218	ANNUAL WASTE AMOUNT 219	STATE WASTE CODE 220
330	660		

UNITS* (Check one item only) ☒ a. GALLONS ☐ b. CUBIC FEET ☐ c. POUNDS ☐ d. TONS 221
* If EHS, amount must be in pounds.
DAYS ON SITE: 365 222

STORAGE CONTAINER
☐ a. ABOVE GROUND TANK ☐ b. UNDERGROUND TANK ☐ c. TANK INSIDE BUILDING ☐ d. STEEL DRUM
☐ e. PLASTIC/NONMETALLIC DRUM ☐ f. CAN ☐ g. CARBOY ☐ h. SILO
☐ i. FIBER DRUM ☐ j. BAG ☐ k. BOX ☐ l. CYLINDER
☐ m. GLASS BOTTLE ☐ n. PLASTIC BOTTLE ☒ o. TOTE BIN ☐ p. TANK WAGON
☐ q. RAIL CAR ☐ r. OTHER 223

STORAGE PRESSURE ☒ a. AMBIENT ☐ b. ABOVE AMBIENT ☐ c. BELOW AMBIENT 224

STORAGE TEMPERATURE ☒ a. AMBIENT ☐ b. ABOVE AMBIENT ☐ c. BELOW AMBIENT ☐ d. CRYOGENIC 225

	%WT	HAZARDOUS COMPONENT (For mixture or waste only)	EHS	CAS #
1	226	Phosphoric Acid 227	☐ Yes ☒ No 228	7664-38-2 229
2	230	231	☐ Yes ☐ No 232	233
3	234	235	☐ Yes ☐ No 236	237
4	238	239	☐ Yes ☐ No 240	241
5	242	243	☐ Yes ☐ No 244	245

If more hazardous components are present at greater than 1% by weight if non-carcinogenic, or > 0.1% by weight if carcinogenic, attach additional sheets of paper capturing the required information.

ADDITIONAL LOCALLY COLLECTED INFORMATION 246

If EPCRA, Please Sign Here

San Bernardino County Fire Department • Hazardous Materials Division
HAZARDOUS MATERIALS INVENTORY – CHEMICAL DESCRIPTION

☒MATERIAL ☐WASTE — Page _22__ of _35__

I. FACILITY INFORMATION

BUSINESS NAME (Same as FACILITY NAME or DBA – Doing Business As) 3
Mojave Solar Project LLC

FACILITY ID # F A | 1 | MAP# 203: 1-A | GRID# 204: E35, F31, C22

II. CHEMICAL INFORMATION

CHEMICAL NAME 205: Liquid Carbon Dioxide
TRADE SECRET 206: ☐ Yes ☒ No (If Subject to EPCRA, refer to instructions)
COMMON NAME 207: Liquid CO2
EHS* 208: ☐ Yes ☒ No
CAS# 124-38-9 209
*If EHS is "Yes", all amounts below must be in lbs.

HAZARDOUS MATERIAL TYPE (Check one item only) 211: ☒ a. PURE ☐ b. MIXTURE ☐ c. WASTE
RADIOACTIVE 212: ☐ Yes ☒ No
CURIES 213:
PHYSICAL STATE (Check one item only) 214: ☐ a. SOLID ☒ b. LIQUID ☐ c. GAS
LARGEST CONTAINER 215: 13000 gallon
FED HAZARD CATEGORIES (Check all that apply) 216: ☐ a. FIRE ☐ b. REACTIVE ☐ c. PRESSURE RELEASE ☒ d. ACUTE HEALTH ☐ e. CHRONIC HEALTH

AVERAGE DAILY AMOUNT 217	MAXIMUM DAILY AMOUNT 218	ANNUAL WASTE AMOUNT 219	STATE WASTE CODE 220
20000	26000		

UNITS* (Check one item only) 221: ☒ a. GALLONS ☐ b. CUBIC FEET ☐ c. POUNDS ☐ d. TONS (* If EHS, amount must be in pounds.)
DAYS ON SITE: 222: 365

STORAGE CONTAINER 223:
☒ a. ABOVE GROUND TANK ☐ b. UNDERGROUND TANK ☐ c. TANK INSIDE BUILDING ☐ d. STEEL DRUM ☐ e. PLASTIC/NONMETALLIC DRUM ☐ f. CAN ☐ g. CARBOY ☐ h. SILO ☐ i. FIBER DRUM ☐ j. BAG ☐ k. BOX ☐ l. CYLINDER ☐ m. GLASS BOTTLE ☐ n. PLASTIC BOTTLE ☐ o. TOTE BIN ☐ p. TANK WAGON ☐ q. RAIL CAR ☐ r. OTHER

STORAGE PRESSURE 224: ☐ a. AMBIENT ☒ b. ABOVE AMBIENT ☐ c. BELOW AMBIENT

STORAGE TEMPERATURE 225: ☐ a. AMBIENT ☐ b. ABOVE AMBIENT ☐ c. BELOW AMBIENT ☒ d. CRYOGENIC

	%WT	HAZARDOUS COMPONENT (For mixture or waste only)	EHS	CAS #
1	100 226	Carbon Dioxide 227	☐ Yes ☒ No 228	124-38-9 229
2	230	231	☐ Yes ☐ No 232	233
3	234	235	☐ Yes ☐ No 236	237
4	238	239	☐ Yes ☐ No 240	241
5	242	243	☐ Yes ☐ No 244	245

If more hazardous components are present at greater than 1% by weight if non-carcinogenic, or > 0.1% by weight if carcinogenic, attach additional sheets of paper capturing the required information.

ADDITIONAL LOCALLY COLLECTED INFORMATION 246

If EPCRA, Please Sign Here

UPCF (Rev. 12/2007)

San Bernardino County Fire Department • Hazardous Materials Division
HAZARDOUS MATERIALS INVENTORY – CHEMICAL DESCRIPTION

☒MATERIAL ☐WASTE — Page _23__ of _35__

I. FACILITY INFORMATION

BUSINESS NAME (Same as FACILITY NAME or DBA – Doing Business As) 3
Mojave Solar Project LLC

FACILITY ID # F A — 1 — MAP# 203: 1-A — GRID# 204: E35, F31, C22

II. CHEMICAL INFORMATION

CHEMICAL NAME 205: Sodium EDTA
TRADE SECRET ☐ Yes ☒ No 206 — If Subject to EPCRA, refer to instructions
COMMON NAME 207: Sodium EDTA
EHS* ☐ Yes ☒ No 208
CAS# 8013-51-2 209
*If EHS is "Yes", all amounts below must be in lbs.

HAZARDOUS MATERIAL TYPE (Check one item only) ☐ a. PURE ☒ b. MIXTURE ☐ c. WASTE 211
RADIOACTIVE ☐ Yes ☒ No 212
CURIES 213

PHYSICAL STATE (Check one item only) ☒ a. SOLID ☐ b. LIQUID ☐ c. GAS 214
LARGEST CONTAINER 100 lb bags 215

FED HAZARD CATEGORIES (Check all that apply) 216
☐ a. FIRE ☐ b. REACTIVE ☐ c. PRESSURE RELEASE ☐ d. ACUTE HEALTH ☒ e. CHRONIC HEALTH

AVERAGE DAILY AMOUNT 217	MAXIMUM DAILY AMOUNT 218	ANNUAL WASTE AMOUNT 219	STATE WASTE CODE 220
350	600		

UNITS* (Check one item only) 221 ☐ a. GALLONS ☐ b. CUBIC FEET ☐ c. POUNDS ☐ d. TONS
* If EHS, amount must be in pounds.
DAYS ON SITE: 365 222

STORAGE CONTAINER 223
☐ a. ABOVE GROUND TANK ☐ e. PLASTIC/NONMETALLIC DRUM ☐ i. FIBER DRUM ☐ m. GLASS BOTTLE ☐ q. RAIL CAR
☐ b. UNDERGROUND TANK ☐ f. CAN ☒ j. BAG ☐ n. PLASTIC BOTTLE ☐ r. OTHER
☐ c. TANK INSIDE BUILDING ☐ g. CARBOY ☐ k. BOX ☐ o. TOTE BIN
☐ d. STEEL DRUM ☐ h. SILO ☐ l. CYLINDER ☐ p. TANK WAGON

STORAGE PRESSURE 224: ☒ a. AMBIENT ☐ b. ABOVE AMBIENT ☐ c. BELOW AMBIENT

STORAGE TEMPERATURE 225: ☒ a. AMBIENT ☐ b. ABOVE AMBIENT ☐ c. BELOW AMBIENT ☐ d. CRYOGENIC

%WT	HAZARDOUS COMPONENT (For mixture or waste only)	EHS	CAS #
1 226	Sodium EDTA 227	☐ Yes ☒ No 228	8013-51-2 229
2 230	231	☐ Yes ☐ No 232	233
3 234	235	☐ Yes ☐ No 236	237
4 238	239	☐ Yes ☐ No 240	241
5 242	243	☐ Yes ☐ No 244	245

If more hazardous components are present at greater than 1% by weight if non-carcinogenic, or > 0.1% by weight if carcinogenic, attach additional sheets of paper capturing the required information.

ADDITIONAL LOCALLY COLLECTED INFORMATION 246

If EPCRA, Please Sign Here

UPCF (Rev. 12/2007)

San Bernardino County Fire Department • Hazardous Materials Division
HAZARDOUS MATERIALS INVENTORY – CHEMICAL DESCRIPTION

☒MATERIAL ☐WASTE — Page _24__ of _35__

I. FACILITY INFORMATION

BUSINESS NAME (Same as FACILITY NAME or DBA – Doing Business As) 3
Mojave Solar Project LLC

FACILITY ID #	F	A								1	MAP# 203	GRID# 204
											1-A	E35, F31, C22

II. CHEMICAL INFORMATION

CHEMICAL NAME 205	TRADE SECRET ☐ Yes ☒ No 206
Sulfuric Acid – 98%	If Subject to EPCRA, refer to instructions
COMMON NAME 207	EHS* ☐ Yes ☒ No 208
Sulfuric Acid	
CAS# 7664-93-9 209	*If EHS is "Yes", all amounts below must be in lbs.

HAZARDOUS MATERIAL TYPE (Check one item only) 211	RADIOACTIVE ☐ Yes ☒ No 212	CURIES 213
☐ a. PURE ☒ b. MIXTURE ☐ c. WASTE		
PHYSICAL STATE (Check one item only) 214	LARGEST CONTAINER 330	215
☐ a. SOLID ☒ b. LIQUID ☐ c. GAS		

FED HAZARD CATEGORIES (Check all that apply) 216
☐ a. FIRE ☒ b. REACTIVE ☐ c. PRESSURE RELEASE ☒ d. ACUTE HEALTH ☐ e. CHRONIC HEALTH

AVERAGE DAILY AMOUNT 217	MAXIMUM DAILY AMOUNT 218	ANNUAL WASTE AMOUNT 219	STATE WASTE CODE 220
400	660		

UNITS* (Check one item only) 221
☒ a. GALLONS ☐ b. CUBIC FEET ☐ c. POUNDS ☐ d. TONS
* If EHS, amount must be in pounds.

DAYS ON SITE: 365 222

STORAGE CONTAINER 223
☐ a. ABOVE GROUND TANK ☐ e. PLASTIC/NONMETALLIC DRUM ☐ i. FIBER DRUM ☐ m. GLASS BOTTLE ☐ q. RAIL CAR
☐ b. UNDERGROUND TANK ☐ f. CAN ☐ j. BAG ☐ n. PLASTIC BOTTLE ☐ r. OTHER
☐ c. TANK INSIDE BUILDING ☐ g. CARBOY ☐ k. BOX ☒ o. TOTE BIN
☐ d. STEEL DRUM ☐ h. SILO ☐ l. CYLINDER ☐ p. TANK WAGON

STORAGE PRESSURE 224
☒ a. AMBIENT ☐ b. ABOVE AMBIENT ☐ c. BELOW AMBIENT

STORAGE TEMPERATURE 225
☒ a. AMBIENT ☐ b. ABOVE AMBIENT ☐ c. BELOW AMBIENT ☐ d. CRYOGENIC

	%WT	HAZARDOUS COMPONENT (For mixture or waste only)	EHS	CAS #
1	98 226	Sulfuric Acid 227	☐ Yes ☒ No 228	7664-93-9 229
2	230	231	☐ Yes ☐ No 232	233
3	234	235	☐ Yes ☐ No 236	237
4	238	239	☐ Yes ☐ No 240	241
5	242	243	☐ Yes ☐ No 244	245

If more hazardous components are present at greater than 1% by weight if non-carcinogenic, or > 0.1% by weight if carcinogenic, attach additional sheets of paper capturing the required information.

ADDITIONAL LOCALLY COLLECTED INFORMATION 246

If EPCRA, Please Sign Here

San Bernardino County Fire Department • Hazardous Materials Division
HAZARDOUS MATERIALS INVENTORY – CHEMICAL DESCRIPTION

☒MATERIAL ☐WASTE — Page _25__ of _35__

I. FACILITY INFORMATION

BUSINESS NAME (Same as FACILITY NAME or DBA – Doing Business As) 3
Mojave Solar Project LLC

FACILITY ID # F A | 1 | MAP# 203: 1-A | GRID# 204: E35, F31, C22

II. CHEMICAL INFORMATION

CHEMICAL NAME 205: Sodium Hydroxide
TRADE SECRET ☐ Yes ☒ No 206 — If Subject to EPCRA, refer to instructions
COMMON NAME 207: Sodium Hydroxide
EHS* ☐ Yes ☒ No 208
CAS# 209
*If EHS is "Yes", all amounts below must be in lbs.

HAZARDOUS MATERIAL TYPE (Check one item only) ☐ a. PURE ☒ b. MIXTURE ☐ c. WASTE 211
RADIOACTIVE ☐ Yes ☒ No 212
CURIES 213

PHYSICAL STATE (Check one item only) ☐ a. SOLID ☒ b. LIQUID ☐ c. GAS 214
LARGEST CONTAINER 330 gal 215

FED HAZARD CATEGORIES (Check all that apply) 216 ☐ a. FIRE ☒ b. REACTIVE ☐ c. PRESSURE RELEASE ☒ d. ACUTE HEALTH ☐ e. CHRONIC HEALTH

AVERAGE DAILY AMOUNT 217	MAXIMUM DAILY AMOUNT 218	ANNUAL WASTE AMOUNT 219	STATE WASTE CODE 220
2500	3350		

UNITS* (Check one item only) 221 ☒ a. GALLONS ☐ b. CUBIC FEET ☐ c. POUNDS ☐ d. TONS
* If EHS, amount must be in pounds.
DAYS ON SITE: 222: 365

STORAGE CONTAINER
☒ a. ABOVE GROUND TANK ☐ b. UNDERGROUND TANK ☐ c. TANK INSIDE BUILDING ☐ d. STEEL DRUM ☐ e. PLASTIC/NONMETALLIC DRUM ☐ f. CAN ☐ g. CARBOY ☐ h. SILO ☐ i. FIBER DRUM ☐ j. BAG ☐ k. BOX ☐ l. CYLINDER ☐ m. GLASS BOTTLE ☐ n. PLASTIC BOTTLE ☐ o. TOTE BIN ☐ p. TANK WAGON ☐ q. RAIL CAR ☐ r. OTHER 223

STORAGE PRESSURE ☒ a. AMBIENT ☐ b. ABOVE AMBIENT ☐ c. BELOW AMBIENT 224

STORAGE TEMPERATURE ☒ a. AMBIENT ☐ b. ABOVE AMBIENT ☐ c. BELOW AMBIENT ☐ d. CRYOGENIC 225

	%WT	HAZARDOUS COMPONENT (For mixture or waste only)	EHS	CAS #
1	50 226	Sodium Hydroxide 227	☐ Yes ☒ No 228	1310-73-2 229
2	230	231	☐ Yes ☐ No 232	233
3	234	235	☐ Yes ☐ No 236	237
4	238	239	☐ Yes ☐ No 240	241
5	242	243	☐ Yes ☐ No 244	245

If more hazardous components are present at greater than 1% by weight if non-carcinogenic, or > 0.1% by weight if carcinogenic, attach additional sheets of paper capturing the required information.

ADDITIONAL LOCALLY COLLECTED INFORMATION 246

If EPCRA, Please Sign Here

UPCF (Rev. 12/2007)

San Bernardino County Fire Department • Hazardous Materials Division
HAZARDOUS MATERIALS INVENTORY – CHEMICAL DESCRIPTION

☒MATERIAL ☐WASTE — Page _26__ of _35__

I. FACILITY INFORMATION

BUSINESS NAME (Same as FACILITY NAME or DBA – Doing Business As) 3
Mojave Solar Project LLC

FACILITY ID #	F	A								1	MAP# 203	GRID# 204
											1-A	E35, F31, C22

II. CHEMICAL INFORMATION

CHEMICAL NAME 205: Diphenyl Ether, Biphenyl

TRADE SECRET ☐ Yes ☒ No 206 — If Subject to EPCRA, refer to instructions

COMMON NAME 207: Heat Transfer Fluid

EHS* ☐ Yes ☒ No 208

CAS# 101-84-8, 92-52-4 209

*If EHS is "Yes", all amounts below must be in lbs.

HAZARDOUS MATERIAL TYPE (Check one item only) ☐ a. PURE ☒ b. MIXTURE ☐ c. WASTE 211

RADIOACTIVE ☐ Yes ☒ No 212

CURIES 213

PHYSICAL STATE (Check one item only) ☐ a. SOLID ☒ b. LIQUID ☐ c. GAS 214

LARGEST CONTAINER 57000 gallon tank 215

FED HAZARD CATEGORIES (Check all that apply) 216
☒ a. FIRE ☒ b. REACTIVE ☐ c. PRESSURE RELEASE ☒ d. ACUTE HEALTH ☒ e. CHRONIC HEALTH

AVERAGE DAILY AMOUNT 217	MAXIMUM DAILY AMOUNT 218	ANNUAL WASTE AMOUNT 219	STATE WASTE CODE 220
2,000,000	2,300,000		

UNITS* (Check one item only) 221: ☒ a. GALLONS ☐ b. CUBIC FEET ☐ c. POUNDS ☐ d. TONS
* If EHS, amount must be in pounds.

DAYS ON SITE: 365 222

STORAGE CONTAINER 223:
☒ a. ABOVE GROUND TANK ☐ b. UNDERGROUND TANK ☐ c. TANK INSIDE BUILDING ☐ d. STEEL DRUM ☐ e. PLASTIC/NONMETALLIC DRUM ☐ f. CAN ☐ g. CARBOY ☐ h. SILO ☐ i. FIBER DRUM ☐ j. BAG ☐ k. BOX ☐ l. CYLINDER ☐ m. GLASS BOTTLE ☐ n. PLASTIC BOTTLE ☐ o. TOTE BIN ☐ p. TANK WAGON ☐ q. RAIL CAR ☒ r. OTHER

STORAGE PRESSURE 224: ☐ a. AMBIENT ☒ b. ABOVE AMBIENT ☐ c. BELOW AMBIENT

STORAGE TEMPERATURE 225: ☐ a. AMBIENT ☒ b. ABOVE AMBIENT ☐ c. BELOW AMBIENT ☐ d. CRYOGENIC

	%WT	HAZARDOUS COMPONENT (For mixture or waste only)	EHS	CAS #
1	73.5 (226)	Diphenyl Ether (227)	☐ Yes ☒ No (228)	101-84-8 (229)
2	26.5 (230)	Biphenyl (231)	☐ Yes ☐ No (232)	92-52-4 (233)
3	(234)	(235)	☐ Yes ☐ No (236)	(237)
4	(238)	(239)	☐ Yes ☐ No (240)	(241)
5	(242)	(243)	☐ Yes ☐ No (244)	(245)

If more hazardous components are present at greater than 1% by weight if non-carcinogenic, or > 0.1% by weight if carcinogenic, attach additional sheets of paper capturing the required information.

ADDITIONAL LOCALLY COLLECTED INFORMATION 246

If EPCRA, Please Sign Here

San Bernardino County Fire Department • Hazardous Materials Division
HAZARDOUS MATERIALS INVENTORY – CHEMICAL DESCRIPTION

☒MATERIAL ☐WASTE Page _27 of 35_

I. FACILITY INFORMATION

BUSINESS NAME (Same as FACILITY NAME or DBA – Doing Business As) 3
Mojave Solar Project LLC

FACILITY ID #	F	A								1	MAP# 203	GRID# 204
											1-A	E35, F31, C22

II. CHEMICAL INFORMATION

CHEMICAL NAME 205	TRADE SECRET ☐ Yes ☒ No 206
Carbon Dioxide	If Subject to EPCRA, refer to instructions
COMMON NAME 207	EHS* ☐ Yes ☒ No 208
Carbon Dioxide	
CAS# 209	*If EHS is "Yes", all amounts below must be in lbs.

HAZARDOUS MATERIAL TYPE (Check one item only) ☒ a. PURE ☐ b. MIXTURE ☐ c. WASTE 211	RADIOACTIVE ☐ Yes ☒ No 212	CURIES 213
PHYSICAL STATE (Check one item only) ☐ a. SOLID ☐ b. LIQUID ☒ c. GAS 214	LARGEST CONTAINER 196 Cu ft 215	

FED HAZARD CATEGORIES (Check all that apply) ☐ a. FIRE ☐ b. REACTIVE ☐ c. PRESSURE RELEASE ☐ d. ACUTE HEALTH ☐ e. CHRONIC HEALTH 216

AVERAGE DAILY AMOUNT 217	MAXIMUM DAILY AMOUNT 218	ANNUAL WASTE AMOUNT 219	STATE WASTE CODE 220
4800	6272		

UNITS* (Check one item only) ☐ a. GALLONS ☒ b. CUBIC FEET ☐ c. POUNDS ☐ d. TONS 221
* If EHS, amount must be in pounds.

DAYS ON SITE: 365 222

STORAGE CONTAINER
☐ a. ABOVE GROUND TANK ☐ b. UNDERGROUND TANK ☐ c. TANK INSIDE BUILDING ☐ d. STEEL DRUM ☐ e. PLASTIC/NONMETALLIC DRUM ☐ f. CAN ☐ g. CARBOY ☐ h. SILO ☐ i. FIBER DRUM ☐ j. BAG ☐ k. BOX ☒ l. CYLINDER ☐ m. GLASS BOTTLE ☐ n. PLASTIC BOTTLE ☐ o. TOTE BIN ☐ p. TANK WAGON ☐ q. RAIL CAR ☐ r. OTHER 223

STORAGE PRESSURE ☐ a. AMBIENT ☒ b. ABOVE AMBIENT ☐ c. BELOW AMBIENT 224

STORAGE TEMPERATURE ☒ a. AMBIENT ☐ b. ABOVE AMBIENT ☐ c. BELOW AMBIENT ☐ d. CRYOGENIC 225

	%WT	HAZARDOUS COMPONENT (For mixture or waste only)	EHS	CAS #
1	100 226	Carbon Dioxide 227	☐ Yes ☒ No 228	229
2	230	231	☐ Yes ☐ No 232	233
3	234	235	☐ Yes ☐ No 236	237
4	238	239	☐ Yes ☐ No 240	241
5	242	243	☐ Yes ☐ No 244	245

If more hazardous components are present at greater than 1% by weight if non-carcinogenic, or > 0.1% by weight if carcinogenic, attach additional sheets of paper capturing the required information.

San Bernardino County Fire Department • Hazardous Materials Division
HAZARDOUS MATERIALS INVENTORY – CHEMICAL DESCRIPTION

☒MATERIAL ☐WASTE — Page _28 of 35_

I. FACILITY INFORMATION

BUSINESS NAME (Same as FACILITY NAME or DBA – Doing Business As) 3
Mojave Solar Project LLC

FACILITY ID # F A — 1 — MAP# 203: 1-A — GRID# 204: E35, F31, C22

II. CHEMICAL INFORMATION

CHEMICAL NAME 205: Hydrogen Gas
TRADE SECRET ☐ Yes ☒ No 206 (If Subject to EPCRA, refer to instructions)
COMMON NAME 207: Hydrogen Gas
EHS* ☐ Yes ☒ No 208
CAS# 101-84-8 209
*If EHS is "Yes", all amounts below must be in lbs.

HAZARDOUS MATERIAL TYPE (Check one item only) ☒ a. PURE ☐ b. MIXTURE ☐ c. WASTE 211
RADIOACTIVE ☐ Yes ☒ No 212
CURIES 213

PHYSICAL STATE (Check one item only) ☐ a. SOLID ☐ b. LIQUID ☒ c. GAS 214
LARGEST CONTAINER 196 Cu ft 215

FED HAZARD CATEGORIES (Check all that apply) 216
☒ a. FIRE ☐ b. REACTIVE ☐ c. PRESSURE RELEASE ☐ d. ACUTE HEALTH ☐ e. CHRONIC HEALTH

AVERAGE DAILY AMOUNT 217	MAXIMUM DAILY AMOUNT 218	ANNUAL WASTE AMOUNT 219	STATE WASTE CODE 220
1800	3196		

UNITS* (Check one item only) 221
☐ a. GALLONS ☒ b. CUBIC FEET ☐ c. POUNDS ☐ d. TONS
* If EHS, amount must be in pounds.

DAYS ON SITE: 365 222

STORAGE CONTAINER 223
☐ a. ABOVE GROUND TANK ☐ b. UNDERGROUND TANK ☐ c. TANK INSIDE BUILDING ☐ d. STEEL DRUM
☐ e. PLASTIC/NONMETALLIC DRUM ☐ f. CAN ☐ g. CARBOY ☐ h. SILO
☐ i. FIBER DRUM ☐ j. BAG ☐ k. BOX ☒ l. CYLINDER
☐ m. GLASS BOTTLE ☐ n. PLASTIC BOTTLE ☐ o. TOTE BIN ☐ p. TANK WAGON
☐ q. RAIL CAR ☐ r. OTHER

STORAGE PRESSURE 224: ☐ a. AMBIENT ☒ b. ABOVE AMBIENT ☐ c. BELOW AMBIENT

STORAGE TEMPERATURE 225: ☒ a. AMBIENT ☐ b. ABOVE AMBIENT ☐ c. BELOW AMBIENT ☐ d. CRYOGENIC

	%WT	HAZARDOUS COMPONENT (For mixture or waste only)	EHS	CAS #
1	100 226	Hydrogen 227	☐ Yes ☒ No 228	229
	230	231	☐ Yes ☐ No 232	233
3	234	235	☐ Yes ☐ No 236	237
4	238	239	☐ Yes ☐ No 240	241
5	242	243	☐ Yes ☐ No 244	245

San Bernardino County Fire Department • Hazardous Materials Division
HAZARDOUS MATERIALS INVENTORY – CHEMICAL DESCRIPTION

☒MATERIAL ☐WASTE — Page _29 of 35_

I. FACILITY INFORMATION

BUSINESS NAME (Same as FACILITY NAME or DBA – Doing Business As) 3
Mojave Solar Project LLC

FACILITY ID #	F	A								1	MAP# 203	GRID# 204
											1-A	E35, F31, C22

II. CHEMICAL INFORMATION

CHEMICAL NAME 205	TRADE SECRET ☐ Yes ☒ No 206
Nitrogen	If Subject to EPCRA, refer to instructions
COMMON NAME 207	EHS* ☐ Yes ☒ No 208
Nitrogen	
CAS# 101-84-8 209	*If EHS is "Yes", all amounts below must be in lbs.

HAZARDOUS MATERIAL TYPE (Check one item only)	RADIOACTIVE	CURIES
☒ a. PURE ☐ b. MIXTURE ☐ c. WASTE 211	☐ Yes ☒ No 212	213
PHYSICAL STATE (Check one item only)	LARGEST CONTAINER	215
☐ a. SOLID ☒ b. LIQUID ☐ c. GAS 214	13000 gallon	

FED HAZARD CATEGORIES (Check all that apply) 216
☐ a. FIRE ☐ b. REACTIVE ☐ c. PRESSURE RELEASE ☐ d. ACUTE HEALTH ☐ e. CHRONIC HEALTH

AVERAGE DAILY AMOUNT 217	MAXIMUM DAILY AMOUNT 218	ANNUAL WASTE AMOUNT 219	STATE WASTE CODE 220
18000	26000		

UNITS* (Check one item only) 221	DAYS ON SITE: 222
☒ a. GALLONS ☐ b. CUBIC FEET ☐ c. POUNDS ☐ d. TONS * If EHS, amount must be in pounds.	365

STORAGE CONTAINER
☒ a. ABOVE GROUND TANK ☐ b. UNDERGROUND TANK ☐ c. TANK INSIDE BUILDING ☐ d. STEEL DRUM ☐ e. PLASTIC/NONMETALLIC DRUM ☐ f. CAN ☐ g. CARBOY ☐ h. SILO ☐ i. FIBER DRUM ☐ j. BAG ☐ k. BOX ☐ l. CYLINDER ☐ m. GLASS BOTTLE ☐ n. PLASTIC BOTTLE ☐ o. TOTE BIN ☐ p. TANK WAGON ☐ q. RAIL CAR ☐ r. OTHER 223

STORAGE PRESSURE ☐ a. AMBIENT ☒ b. ABOVE AMBIENT ☐ c. BELOW AMBIENT 224

STORAGE TEMPERATURE ☐ a. AMBIENT ☐ b. ABOVE AMBIENT ☐ c. BELOW AMBIENT ☒ d. CRYOGENIC 225

%WT	HAZARDOUS COMPONENT (For mixture or waste only)	EHS	CAS #
1 100 226	Nitrogen 227	☐ Yes ☒ No 228	229
230	231	☐ Yes ☐ No 232	233
3 234	235	☐ Yes ☐ No 236	237
4 238	239	☐ Yes ☐ No 240	241
5 242	243	☐ Yes ☐ No 244	245

San Bernardino County Fire Department • Hazardous Materials Division
HAZARDOUS MATERIALS INVENTORY – CHEMICAL DESCRIPTION

☒MATERIAL ☐WASTE — Page _30 of 35_

I. FACILITY INFORMATION

BUSINESS NAME (Same as FACILITY NAME or DBA – Doing Business As) 3
Mojave Solar Project LLC

FACILITY ID #	F	A								1	MAP# 203	GRID# 204
											1-A	E35, F31, C22

II. CHEMICAL INFORMATION

CHEMICAL NAME 205	TRADE SECRET ☐ Yes ☒ No 206
Ammonium Hydroxide	If Subject to EPCRA, refer to instructions
COMMON NAME 207	EHS* ☐ Yes ☒ No 208
Ammonium Hydroxide	
CAS# 1336-21-6 209	*If EHS is "Yes", all amounts below must be in lbs.

HAZARDOUS MATERIAL TYPE (Check one item only) 211	RADIOACTIVE ☐ Yes ☒ No 212	CURIES 213
☐ a. PURE ☒ b. MIXTURE ☐ c. WASTE		
PHYSICAL STATE (Check one item only) 214	LARGEST CONTAINER 6900 gallon 215	
☐ a. SOLID ☒ b. LIQUID ☐ c. GAS		

FED HAZARD CATEGORIES (Check all that apply) 216
☐ a. FIRE ☐ b. REACTIVE ☐ c. PRESSURE RELEASE ☒ d. ACUTE HEALTH ☐ e. CHRONIC HEALTH

AVERAGE DAILY AMOUNT 217	MAXIMUM DAILY AMOUNT 218	ANNUAL WASTE AMOUNT 219	STATE WASTE CODE 220
6400	8840		

UNITS* (Check one item only) 221
☒ a. GALLONS ☐ b. CUBIC FEET ☐ c. POUNDS ☐ d. TONS
* If EHS, amount must be in pounds.

DAYS ON SITE: 365 222

STORAGE CONTAINER 223
☒ a. ABOVE GROUND TANK ☐ b. UNDERGROUND TANK ☐ c. TANK INSIDE BUILDING ☐ d. STEEL DRUM ☐ e. PLASTIC/NONMETALLIC DRUM ☐ f. CAN ☐ g. CARBOY ☐ h. SILO ☐ i. FIBER DRUM ☐ j. BAG ☐ k. BOX ☐ l. CYLINDER ☐ m. GLASS BOTTLE ☐ n. PLASTIC BOTTLE ☒ o. TOTE BIN ☐ p. TANK WAGON ☐ q. RAIL CAR ☐ r. OTHER

STORAGE PRESSURE 224
☒ a. AMBIENT ☐ b. ABOVE AMBIENT ☐ c. BELOW AMBIENT

STORAGE TEMPERATURE 225
☒ a. AMBIENT ☐ b. ABOVE AMBIENT ☐ c. BELOW AMBIENT ☐ d. CRYOGENIC

	%WT	HAZARDOUS COMPONENT (For mixture or waste only)	EHS	CAS #
1	100 226	Ammonium Hydroxide 227	☐ Yes ☒ No 228	1336-21-6 229
	230	231	☐ Yes ☐ No 232	233
3	234	235	☐ Yes ☐ No 236	237
4	238	239	☐ Yes ☐ No 240	241
5	242	243	☐ Yes ☐ No 244	245

San Bernardino County Fire Department • Hazardous Materials Division
HAZARDOUS MATERIALS INVENTORY – CHEMICAL DESCRIPTION

☒MATERIAL ☐WASTE — Page _31 of 35_

I. FACILITY INFORMATION

BUSINESS NAME (Same as FACILITY NAME or DBA – Doing Business As) 3
Mojave Solar Project LLC

FACILITY ID #	F	A								1	MAP# 203	GRID# 204
											1-A	E35, F31, C22

II. CHEMICAL INFORMATION

CHEMICAL NAME 205	TRADE SECRET ☐ Yes ☒ No 206
Citric Acid	If Subject to EPCRA, refer to instructions
COMMON NAME 207	EHS* ☐ Yes ☒ No 208
Citric Acid	
CAS# 77-92-9 209	*If EHS is "Yes", all amounts below must be in lbs.

HAZARDOUS MATERIAL TYPE (Check one item only)	RADIOACTIVE	CURIES
☐ a. PURE ☒ b. MIXTURE ☐ c. WASTE 211	☐ Yes ☒ No 212	213
PHYSICAL STATE (Check one item only)	LARGEST CONTAINER	215
☐ a. SOLID ☒ b. LIQUID ☐ c. GAS 214	6900 gallon	

FED HAZARD CATEGORIES (Check all that apply) 216
☐ a. FIRE ☐ b. REACTIVE ☐ c. PRESSURE RELEASE ☐ d. ACUTE HEALTH ☒ e. CHRONIC HEALTH

AVERAGE DAILY AMOUNT 217	MAXIMUM DAILY AMOUNT 218	ANNUAL WASTE AMOUNT 219	STATE WASTE CODE 220
7000	9420		

UNITS* (Check one item only) 221
☒ a. GALLONS ☐ b. CUBIC FEET ☐ c. POUNDS ☐ d. TONS
* If EHS, amount must be in pounds.

DAYS ON SITE: 222
365

STORAGE CONTAINER 223
☒ a. ABOVE GROUND TANK ☐ b. UNDERGROUND TANK ☐ c. TANK INSIDE BUILDING ☐ d. STEEL DRUM ☐ e. PLASTIC/NONMETALLIC DRUM ☐ f. CAN ☐ g. CARBOY ☐ h. SILO ☐ i. FIBER DRUM ☐ j. BAG ☐ k. BOX ☐ l. CYLINDER ☐ m. GLASS BOTTLE ☐ n. PLASTIC BOTTLE ☒ o. TOTE BIN ☐ p. TANK WAGON ☐ q. RAIL CAR ☐ r. OTHER

STORAGE PRESSURE 224
☐ a. AMBIENT ☒ b. ABOVE AMBIENT ☐ c. BELOW AMBIENT

STORAGE TEMPERATURE 225
☐ a. AMBIENT ☐ b. ABOVE AMBIENT ☐ c. BELOW AMBIENT ☒ d. CRYOGENIC

	%WT	HAZARDOUS COMPONENT (For mixture or waste only)	EHS	CAS #
1	100 226	Citric Acid 227	☐ Yes ☒ No 228	77-92-9 229
	230	231	☐ Yes ☐ No 232	233
3	234	235	☐ Yes ☐ No 236	237
4	238	239	☐ Yes ☐ No 240	241
5	242	243	☐ Yes ☐ No 244	245

San Bernardino County Fire Department • Hazardous Materials Division
HAZARDOUS MATERIALS INVENTORY – CHEMICAL DESCRIPTION

☒MATERIAL ☐WASTE — Page _32 of 35_

I. FACILITY INFORMATION

BUSINESS NAME (Same as FACILITY NAME or DBA – Doing Business As) 3
Mojave Solar Project LLC

FACILITY ID #	F	A								1	MAP# 203	GRID# 204
											1-A	E35, F31, C22

II. CHEMICAL INFORMATION

CHEMICAL NAME 205	TRADE SECRET ☐ Yes ☒ No 206
Bonderite	If Subject to EPCRA, refer to instructions
COMMON NAME 207	EHS* ☐ Yes ☒ No 208
Bonderite	
CAS# 107-21-1 209	*If EHS is "Yes", all amounts below must be in lbs.

HAZARDOUS MATERIAL TYPE (Check one item only)	RADIOACTIVE	CURIES
☒ a. PURE ☐ b. MIXTURE ☐ c. WASTE 211	☐ Yes ☒ No 212	213
PHYSICAL STATE (Check one item only)	LARGEST CONTAINER	215
☐ a. SOLID ☒ b. LIQUID ☐ c. GAS 214	55 gallon	

FED HAZARD CATEGORIES (Check all that apply) 216
☐ a. FIRE ☐ b. REACTIVE ☐ c. PRESSURE RELEASE ☐ d. ACUTE HEALTH ☐ e. CHRONIC HEALTH

AVERAGE DAILY AMOUNT 217	MAXIMUM DAILY AMOUNT 218	ANNUAL WASTE AMOUNT 219	STATE WASTE CODE 220
180	240		

UNITS* (Check one item only) 221 ☒ a. GALLONS ☐ b. CUBIC FEET ☐ c. POUNDS ☐ d. TONS
* If EHS, amount must be in pounds.

DAYS ON SITE: 365 222

STORAGE CONTAINER 223
☐ a. ABOVE GROUND TANK ☒ e. PLASTIC/NONMETALLIC DRUM ☐ i. FIBER DRUM ☐ m. GLASS BOTTLE ☐ q. RAIL CAR
☐ b. UNDERGROUND TANK ☐ f. CAN ☐ j. BAG ☐ n. PLASTIC BOTTLE ☐ r. OTHER
☐ c. TANK INSIDE BUILDING ☐ g. CARBOY ☐ k. BOX ☐ o. TOTE BIN
☐ d. STEEL DRUM ☐ h. SILO ☐ l. CYLINDER ☐ p. TANK WAGON

STORAGE PRESSURE 224 ☒ a. AMBIENT ☐ b. ABOVE AMBIENT ☐ c. BELOW AMBIENT

STORAGE TEMPERATURE 225 ☒ a. AMBIENT ☐ b. ABOVE AMBIENT ☐ c. BELOW AMBIENT ☐ d. CRYOGENIC

	%WT	HAZARDOUS COMPONENT (For mixture or waste only)	EHS	CAS #
1	100 226	Bonderite 227	☐ Yes ☒ No 228	107-21-1 229
	230	231	☐ Yes ☐ No 232	233
3	234	235	☐ Yes ☐ No 236	237
4	238	239	☐ Yes ☐ No 240	241
5	242	243	☐ Yes ☐ No 244	245

San Bernardino County Fire Department • Hazardous Materials Division
HAZARDOUS MATERIALS INVENTORY – CHEMICAL DESCRIPTION

☒MATERIAL ☐WASTE — Page _33 of 35_

I. FACILITY INFORMATION

BUSINESS NAME (Same as FACILITY NAME or DBA – Doing Business As) 3
Mojave Solar Project LLC

FACILITY ID #	F	A								1	MAP# 203	GRID# 204
											1-A	E35, F31, C22

II. CHEMICAL INFORMATION

CHEMICAL NAME 205	TRADE SECRET ☐ Yes ☒ No 206
Sodium Nitrite	If Subject to EPCRA, refer to instructions
COMMON NAME 207	EHS* ☐ Yes ☒ No 208
Sodium Nitrite	
CAS# 7632-00-0 209	*If EHS is "Yes", all amounts below must be in lbs.

HAZARDOUS MATERIAL TYPE (Check one item only)	RADIOACTIVE	CURIES
☐ a. PURE ☒ b. MIXTURE ☐ c. WASTE 211	☐ Yes ☒ No 212	213
PHYSICAL STATE (Check one item only)	LARGEST CONTAINER	215
☒ a. SOLID ☐ b. LIQUID ☐ c. GAS 214	50 lb bag	

FED HAZARD CATEGORIES (Check all that apply) 216
☐ a. FIRE ☐ b. REACTIVE ☐ c. PRESSURE RELEASE ☐ d. ACUTE HEALTH ☐ e. CHRONIC HEALTH

AVERAGE DAILY AMOUNT 217	MAXIMUM DAILY AMOUNT 218	ANNUAL WASTE AMOUNT 219	STATE WASTE CODE 220
6000	8200		

UNITS* (Check one item only) 221 ☐ a. GALLONS ☐ b. CUBIC FEET ☒ c. POUNDS ☐ d. TONS
* If EHS, amount must be in pounds.

DAYS ON SITE: 365 222

STORAGE CONTAINER 223
☐ a. ABOVE GROUND TANK ☐ e. PLASTIC/NONMETALLIC DRUM ☐ i. FIBER DRUM ☐ m. GLASS BOTTLE ☐ q. RAIL CAR
☐ b. UNDERGROUND TANK ☐ f. CAN ☒ j. BAG ☐ n. PLASTIC BOTTLE ☐ r. OTHER
☐ c. TANK INSIDE BUILDING ☐ g. CARBOY ☐ k. BOX ☐ o. TOTE BIN
☐ d. STEEL DRUM ☐ h. SILO ☐ l. CYLINDER ☐ p. TANK WAGON

STORAGE PRESSURE 224 ☒ a. AMBIENT ☐ b. ABOVE AMBIENT ☐ c. BELOW AMBIENT

STORAGE TEMPERATURE 225 ☒ a. AMBIENT ☐ b. ABOVE AMBIENT ☐ c. BELOW AMBIENT ☐ d. CRYOGENIC

	%WT	HAZARDOUS COMPONENT (For mixture or waste only)	EHS	CAS #
1	100 226	Sodium Nitrate 227	☐ Yes ☒ No 228	7632-00-0 229
	230	231	☐ Yes ☐ No 232	233
3	234	235	☐ Yes ☐ No 236	237
4	238	239	☐ Yes ☐ No 240	241
5	242	243	☐ Yes ☐ No 244	245

San Bernardino County Fire Department • Hazardous Materials Division
HAZARDOUS MATERIALS INVENTORY – CHEMICAL DESCRIPTION

☒MATERIAL ☐WASTE — Page _29 of 29_

I. FACILITY INFORMATION

BUSINESS NAME (Same as FACILITY NAME or DBA – Doing Business As) 3
Mojave Solar Project LLC

FACILITY ID #	F	A								1	MAP# 203	GRID# 204
											1-A	E35, F31, C22

II. CHEMICAL INFORMATION

CHEMICAL NAME 205	TRADE SECRET ☐ Yes ☒ No 206
Surfactant NP95	If Subject to EPCRA, refer to instructions
COMMON NAME 207	EHS* ☐ Yes ☒ No 208
Surfactant	
CAS# 9016-45-9 209	*If EHS is "Yes", all amounts below must be in lbs.

HAZARDOUS MATERIAL TYPE (Check one item only) 211	RADIOACTIVE ☐ Yes ☒ No 212	CURIES 213
☐ a. PURE ☒ b. MIXTURE ☐ c. WASTE		
PHYSICAL STATE (Check one item only) 214	LARGEST CONTAINER 55 gallon drum 215	
☐ a. SOLID ☒ b. LIQUID ☐ c. GAS		

FED HAZARD CATEGORIES (Check all that apply) 216
☐ a. FIRE ☐ b. REACTIVE ☐ c. PRESSURE RELEASE ☐ d. ACUTE HEALTH ☐ e. CHRONIC HEALTH

AVERAGE DAILY AMOUNT 217	MAXIMUM DAILY AMOUNT 218	ANNUAL WASTE AMOUNT 219	STATE WASTE CODE 220
300	440		

UNITS* (Check one item only) 221
☒ a. GALLONS ☐ b. CUBIC FEET ☐ c. POUNDS ☐ d. TONS
* If EHS, amount must be in pounds.

DAYS ON SITE: 222
365

STORAGE CONTAINER 223
☐ a. ABOVE GROUND TANK ☐ e. PLASTIC/NONMETALLIC DRUM ☐ i. FIBER DRUM ☐ m. GLASS BOTTLE ☐ q. RAIL CAR
☐ b. UNDERGROUND TANK ☐ f. CAN ☐ j. BAG ☐ n. PLASTIC BOTTLE ☐ r. OTHER
☐ c. TANK INSIDE BUILDING ☐ g. CARBOY ☐ k. BOX ☐ o. TOTE BIN
☒ d. STEEL DRUM ☐ h. SILO ☐ l. CYLINDER ☐ p. TANK WAGON

STORAGE PRESSURE 224
☒ a. AMBIENT ☐ b. ABOVE AMBIENT ☐ c. BELOW AMBIENT

STORAGE TEMPERATURE 225
☒ a. AMBIENT ☐ b. ABOVE AMBIENT ☐ c. BELOW AMBIENT ☐ d. CRYOGENIC

	%WT	HAZARDOUS COMPONENT (For mixture or waste only)	EHS	CAS #
1	100 226	Surfactant 227	☐ Yes ☒ No 228	9016-45-9 229
	230	231	☐ Yes ☐ No 232	233
3	234	235	☐ Yes ☐ No 236	237
4	238	239	☐ Yes ☐ No 240	241
5	242	243	☐ Yes ☐ No 244	245

CALIFORNIA ACCIDENTAL RELEASE PREVENTION PROGRAM (CalARP) REGISTRATION

FACILITY ID # [redacted] F A 1

I. FACILITY / STATIONARY SOURCE IDENTIFICATION

STATIONARY SOURCE NAME 2203	PHONE 2204
STATIONARY SOURCE ADDRESS 2205	CITY 2206

II. OWNER/OPERATOR IDENTIFICATION

OWNER/OPERATOR NAME 2207		PHONE 2208	
MAILING ADDRESS 2209	CITY 2210	STATE 2211	ZIP CODE 2212

III. REGULATED SUBSTANCES LIST

A. Name of Each Regulated Substance:

	2213	2214 Percent by Weight	2215 Process Maximum Quantity (lbs.)	2216 CAS #
1.				
2.				
3.				

B. Name of Each Regulated Substance in a Mixture:

	2217	2218 Percent by Weight	2219 Process Maximum Quantity (lbs.)	2220 CAS #
1a.	NOT APPLICABLE			
1b.				
1c.				
2a.				
2b.				
2c.				

NOTES *(Conversion Factors, Calculation Notes, Mixture Information, etc. Note which substance or mixture the note applies to):* 2223

IV. CERTIFICATION

I, as the owner or operator of the aforementioned business, hereby certify that the registration information provided above is true, accurate and complete to the best of my knowledge, based upon reasonable inquiry. I am fully aware that this certification, executed on the date indicated below, is made under penalty of perjury under the laws of the State of California.

	DATE 2224
NAME OF OWNER/OPERATOR 2225	TITLE OF OWNER/OPERATOR 2226

ABENGOA EPC

MOJAVE

Emergency Plan - HMBP

Title: Annex 02 Material Safety Data Sheets
Process: Business Emergency Contingency Plan
Project: Mojave Solar Project

Document No:	PEM-0002-01 Annex 02
Revision:	01
Date:	03/15/14

Prepared by:	
Kirk Anderson – Environmental Engineer	Electronic Signature

Reviewed by:	
Efrain Perez – Quality Manager	Electronic Signature
Steven Pochmara – Permitting Manager	Electronic Signature

Approved by:	
Nicolas Gallo – Project Sub Director	Electronic Signature
Rafael Sanchez Mendoza – Project Director	Electronic Signature

This document belongs to the Abener Teyma Mojaves. Its total or partial reproduction, by any means, as well as distribution to third parties without the express written consent of the Abener Teyma Mojave is strictly forbidden.

Sodium hypochlorite, 10-25% chlorine

MSDS Name Sodium hypochlorite, 10-25% chlorine
Catalog Numbers 1932, 1933
7681-52-9 Sodium hypochlorite 10-25%
231-668-3 Hazard Symbols: C Risk Phrases: 31 34

EMERGENCY OVERVIEW
Contact with acids liberates toxic gas. Causes burns.Light sensitive.
POTENTIAL HEALTH EFFECTS
Eye: Causes eye burns. Causes redness and pain.
Skin: Causes skin burns. Causes redness and pain.
Ingestion: Causes gastrointestinal irritation with nausea, vomiting and diarrhea.
Causes gastrointestinal tract burns.
Inhalation: May cause severe irritation of the respiratory tract with sore throat, coughing, shortness of breath and delayed lung edema. Causes chemical burns to the respiratory tract.

Eyes: Immediately flush eyes with plenty of water for at least 15 minutes, occasionally lifting the upper and lower eyelids. Get medical aid.
Skin: Get medical aid. Flush skin with plenty of water for at least 15 minutes while removing contaminated clothing and shoes. Immediately flush skin with plenty of water for at least 15 minutes while removing contaminated clothing and shoes.
Ingestion: Do NOT induce vomiting. If conscious and alert, rinse mouth and drink 2-4 cupfuls of milk or water.
Inhalation: Remove from exposure and move to fresh air immediately. If not breathing, give artificial respiration. If breathing is difficult, give oxygen.
Get medical aid.

General Information:
As in any fire, wear a self-contained breathing apparatus in pressure demand, MSHA/NIOSH (approved or equivalent), and full protective gear. Substance is noncombustible.
Oxidizer. Greatly increases the burning rate of combustible materials.
Extinguishing Media:
Use water spray, dry chemical, carbon dioxide, or chemical foam.

General Information:
Use proper personal protective equipment as indicated in Section 8.
Spills/Leaks: Absorb spill with inert material (e.g. vermiculite, sand or earth), then place in suitable container.

Handling: Do not breathe dust, vapor, mist, or gas. Do not get in eyes, on skin, or on clothing. Use only in a chemical fume hood.
Storage: Store in a tightly closed container. Store in a dry area. Keep refrigerated. (Store below 4°C/39°F.)

Engineering Controls
Facilities storing or utilizing this material should be equipped with an eyewash facility and a safety shower. Use adequate ventilation to keep airborne concentrations low.
PERSONAL PROTECTIVE EQUIPMENT
Eyes: Wear chemical splash goggles.
Skin: Wear appropriate protective gloves to prevent skin exposure.
Clothing: Wear appropriate protective clothing to prevent skin exposure.
Respirators: Follow the OSHA respirator regulations found in 29 CFR 1910.134 or European Standard EN 149. Use a NIOSH/MSHA or European Standard EN 149 approved respirator if exposure limits are exceeded or if irritation or other symptoms are experienced.

Physical State: Clear liquid
Color: yellow

Odor: disagreeable odor - sweetish odor
pH: Not available
Vapor Pressure: 17.5 mm Hg @ 20 deg C
Viscosity: Not available
Boiling Point: Not available
Freezing/Melting Point: -16 deg C (3.20°F)
Autoignition Temperature: Not available
Flash Point: Not available
Explosion Limits: Lower: Not available
Explosion Limits: Upper: Not available
Decomposition Temperature: Not available
Solubility in water: Soluble
Specific Gravity/Density: 1.2090g/cm3
Molecular Formula: NaOCl
Molecular Weight: 74.44

Chemical Stability: Stable under normal temperatures and pressures.
Conditions to Avoid: Incompatible materials, light, combustible materials, temperatures above 40°C.
Incompatibilities Metals, reducing agents, strong acids, amines, ammonia, acids with Other Materials (organic, e.g. acetic acid, benzoic acid, formic acid, methanoic acid, oxalic acid), methanol, ammonium salts.
Hazardous Decomposition Products
Hydrogen chloride, chlorine, sodium oxide.
Hazardous Polymerization
Will not occur.

RTECS#: CAS# 7681-52-9: NH3486300
LD50/LC50: RTECS:
CAS# 7681-52-9: Draize test, rabbit, eye: 10 mg Moderate;
Draize test, rabbit, eye: 1.31 mg Mild;
Oral, mouse: LD50 = 5800 mg/kg;
.
Carcinogenicity: Sodium hypochlorite - IARC: Group 3 (not classifiable)
Other: See actual entry in RTECS for complete information.

Ecotoxicity Fish: Rainbow trout: 0.07 mg/l; 48h; .
Fish: Fathead Minnow: 5.9 mg/l; 96h; .

Dispose of in a manner consistent with federal, state, and local regulations.
Section 14 - Transport Information
HS Code 2828 90 00 **Storage class (VCI)** 8 B Non-flammable corrosive materials
GGVS Packing category
A **WGK** 2 (polluting substance)
Storage Store below +15ºC.
Domestic (Land, ADR.)

Proper Shipping Name: HYPOCHLORITE SOLUTION
Hazard Class: 8
Hazard Code: C9
UN No. : 1791
Packing Group: III
GGVS 8/C 9 III **GGVE** 8/C 9 III
ADR 8/C 9 III **RID** 8/C 9 III
International (Water, I.M.O.)

Proper Shipping Name: HYPOCHLORITE SOLUTION
Hazard Class: 8
Hazard Code: C9

UN No. : 1791
Packing Group: III
IMDG Code 8/III **UN number**
(transport by sea)
1791
International (Air, I.C.A.O.)

Proper Shipping Name: HYPOCHLORITE SOLUTION
Hazard Class: 8
Hazard Code: C9
UN No. : 1791
Packing Group: III
UN number
(transport by air)
1791 **CAO CARGO**
Packing
instructions
821
PAX Packing
instructions
819
Section 15 - Regulatory Information
European/International Regulations
WGK (Water Danger/Protection)
CAS# 7681-52-9: 2
Canada
CAS# 7681-52-9 is listed on Canada's DSL List
US Federal
European Labeling in Accordance with EC Directives
Hazard Symbols: C
Risk Phrases:
R 31 Contact with acids liberates toxic gas.
R 34 Causes burns.
Safety Phrases:
S 28A After contact with skin, wash immediately with plenty of water.
S 45 In case of accident or if you feel unwell, seek medical advice immediately (show the label where possible).
S 50A Do not mix with acids.
TSCA
CAS# 7681-52-9 is listed on the TSCA Inventory.
Section 16 - Additional Information
The information above is believed to be accurate and represents the best information currently available to us. However, we make no warranty, and assume no liability resulting from its use. Users should make their own inquiry to determine the suitability of the information for their particular purposes. In no way the company or any of it employees will be liable for any kind of damages, howsoever arising, even if the company has been advised of the possibility of such damages.
Date of issue 01.08.08

SODIUM BISULPHITE SOLUTION 35% P/V PRS

SODIUM BISULPHITE SOLUTION 35% P/V PRS
Material Safety Data Sheets (MSDS)
Revision date: 20/3/2008
Página 1 de 5
SODIUM BISULPHITE SOLUTION 35% P/V PRS MSDS (MATERIAL SAFETY DATA SHEETS)

1. IDENTIFICATION OF THE SUBSTANCE/PREPARATION AND OF THE COMPANY/UNDERTAKING.
1.1 Identification of the substance or preparation.
Name: SODIUM BISULPHITE SOLUTION 35% P/V PRS
Code: B1100

1.2 Use of the substance/preparation.

2. HAZARDS IDENTIFICATION.
Harmful if swallowed.
Contact with acids liberates toxic gas.

3. COMPOSITION OF/INFORMATION ABOUT THE COMPONENTS.
Substances presenting a health or environmental hazard within the meaning of Directive 67/548/EEC:
Index No CAS No. EC No Registration
number Name Concentrate % Symbols R phrases *

016-064-00-8 7631-90-5 231-548-0 sodium bisulphite
35% 25 - 50 % Xn R22 R31

* The complete text of the R phrases is given in section 16 of this Safety Data Sheet.
4. FIRST AID.
In case of doubt or when symptoms of feeling unwell persist, get medical attention. Never administer anything orally to persons who are unconscious.
Inhalation.
Take the victim into open air; keep them warm and calm. If breathing is irregular or stops, perform artificial respiration. Do not administer anything orally. If unconscious, place them in a suitable position and seek medical assistance.
Eye contact.
If wearing contact lenses, remove them. Wash eyes with plenty of clean and cool water for at least 10 minutes while pulling eyelids up, and seek medical assistance.
Skin contact.
Remove contaminated clothing. Wash skin vigorously with water and soap or a suitable skin cleaner. **NEVER** use solvents or thinners.
Ingestion.
If accidentally ingested, seek immediate medical attention. Keep calm. **NEVER** induce vomiting.
5. FIRE FIGHTING MEASURES.
Recommended extinguishing methods.
Extinguisher powder or CO2. In case of more serious fires, also alcohol-resistant foam and water spray. Do not use a direct stream of water to extinguish.
Special risks.
Fire can cause thick, black smoke. As a result of thermal decomposition, dangerous products can form: carbon monoxide, carbon dioxide. Exposure to combustion or decomposition products can be harmful to your health.
Fire protection equipment.
According to the size of the fire, it may be necessary to use protective suits against the heat, individual breathing equipment, gloves, protective goggles or facemasks, and gloves.
Other recommendations.
Use water to cool tanks, cisterns, or containers close to the heat source or fire. Take wind direction into account.
Prevent the products used to fight the fire from going into drains, sewers, or waterways.

6. MEASURES TO TAKE IN CASE OF ACCIDENTAL SPILL.
Individual precautions.
Eliminate possible ignition points and ventilate the area. Avoid breathing fumes. For exposure control and individual protection measures, see section 8.
Cleaning methods.
Pick up the spill with non-combustible absorbent materials (soil, sand, vermiculite, diatomite, etc.). Pour the product and the absorbent in an appropriate container. The contaminated area should be immediately cleaned with an appropriate de-

contaminator. Pour the decontaminator on the remains in an opened container and let it act various days until no further reaction is produced. For later elimination of waste, follow the recommendations under section 13.
Environmental protection precautions.
Prevent the contamination of drains, surface or subterranean waters, and the ground. In case of large spills or if the product contaminates lakes, rivers, or sewers, inform the responsible authorities according to local legislation.

7. HANDLING AND STORAGE.
7.1 Handling.
The fumes are heavier than air and can spread across the ground. They can form explosive mixtures with air. Prevent the creation of flammable or explosive fume concentrations in the air; prevent fume concentrations above work exposure limits. The preparation must only be used in areas where all unprotected flames and other ignition points have been eliminated. Electrical equipment has to be protected according to applicable standards. The preparation can be electrostatically charged: always use earth grounds when transferring the product. Operators must use anti-static footwear and clothing, and floors must be conductors. Keep the container tightly closed and isolated from heat sources, sparks, and fire. Do not use tools that can cause sparks. Prevent the preparation from contacting the skin or eyes. Avoid the inhalation of fumes and mists that form when spraying. For personal protection, see section 8. Never use pressure to empty the containers. They are not pressure-resistant containers. In the application area, smoking, eating, and drinking must be prohibited. Follow legislation on occupational health and safety. Keep the product in containers made of a material identical to the original.

Revision date: 20/3/2008
Página 3 de 5
SODIUM BISULPHITE SOLUTION 35% P/V PRS MSDS (MATERIAL SAFETY DATA SHEETS)

7.2 Storage.
Store according to local legislation. Observe indications on the label. Store the containers between 5 and 35º C, in a dry and well-ventilated place, far from sources of heat and direct solar light. Keep far away from ignition points. Keep away from oxidising agents and from highly acidic or alkaline materials. Do not smoke. Prevent the entry of non-authorized persons. Once the containers are open, they must be carefully closed and placed vertically to prevent spills.

7.3 Specific use(s).

8. EXPOSURE CONTROL/PERSONAL PROTECTION.
8.1 Exposure limits.
Work exposure limit for:
Name
VLA-ED * VLA-EC *
ppm mg/m3 ppm mg/m3

* According to the list of Limit Environmental Professional Exposure Values adopted by the National Institute for Safety and Hygiene at Work for the year 2007.

8.2 Exposure controls
Measures of a technical nature: provide adequate ventilation, which can be achieved by using good local exhaustventilation and a good general exhaust system. If this were not enough to keep the particulate and fume concentrations of the solvent below the work exposure limit, suitable breathing equipment must be used. Breathing protection: when workers are subjected to concentrations above the exposure limit, they must use suitable and officially approved equipment. Use active carbon masks. Hand protection: for prolonged or repeated contact, use polyvinyl alcohol or nitrile rubber types of gloves. Protective creams can help to protect exposed areas of the skin. These creams must **NEVER** be applied once exposure has occurred. Eye protection: use protective goggles especially designed to protect against liquid splatters. Install emergency eyewashes near the use area. Skin protection: personnel must wear anti-static clothing made of natural fibre or synthetic fibres resistant to high temperatures. All body parts that have been in contact with the preparation must be washed.

9. PHYSICAL AND CHEMICAL PROPERTIES.
9.1. General information.
Aspect: Liquid with characteristic odour and colour
Smell:

9.2. Important health, safety and environmental information.
pH:
Boiling Point: ºC
Flash point: ºC
Inflammability (solid, gas):
Explosive properties:
Combustive properties:
Vapour pressure:

Relative density: gr/cm3
Solubility
Hydrosolubility:
Liposolubility:
Distribution coefficient (n-octanol/water):
Viscosity:
Vapour density:
Evaporation velocity:

10. STABILITY AND REACTIVITY.
Stable under the recommended handling and storage conditions (see section 7). In case of fire, dangerous decomposition products can be generated, such as carbon monoxide and dioxide and nitrogen fumes and oxides. Keep away from oxidising agents and from highly alkaline or acidic materials in order to prevent exothermic reactions.

11. TOXICOLOGICAL INFORMATION.
There are no tested data available on the product. Exposure to concentrations of solvent fumes above the work exposure limit can have negative effects (for example, irritation of the mucous membranes and respiratory system, adverse effects on the kidneys, liver, and the central nervous system). Among the symptoms are headaches, vertigo, fatigue, muscular weakness, drowsiness, and in extreme cases, unconsciousness. Repeated or prolonged contact with the preparation can cause the elimination of oil from the skin, giving rise to nonallergic contact dermatitis and absorption of the preparation through the skin. Splatters in the eyes can cause irritation and irreversible damage.

12. ECOLOGICAL INFORMATION.
There are no tested data available on the preparation. The product must not be allowed to go into sewers or waterways.
Prevent penetration into the ground. Prevent the emission of solvents into the atmosphere.

13. ELIMINATION CONSIDERATIONS.
Dumping into sewers or waterways is prohibited. Waste and empty containers must be handled and eliminated according to current, local/national legislation.

14. INFORMATION PERTAINING TO TRANSPORT.
Transport following ADR/TPC rules for highway transport, RID rules for railway, IMDG for sea, and ICAO/IATA for air transport.
Transport method
14.1 Land: Transport by road: ADR 2007, Transport by rail: RID
UN no.: 2693 Class: 8 Packaging group: III
Labels: 8 Hazard number: 80
Transport documentation: Consignment note and written instructions
14.2 Sea: Transport by ship: IMDG 33-06
UN no.: 2693 Class: 8
Packaging group: III Labels: 8
FEm – Emergency sheets (F – Fire, S - Spills): F-A,S-B
Sea pollutant (PP – Strong sea pollutant, P – Sea pollutant):
Transport documentation: Bill of lading
14.3 Air: Transport by plane: IATA/ICAO
UN no.: 2693 Class: 8 Packaging group: III
Labels: 8
Transport document: Airway bill

15. REGULATORY INFORMATION.

R22 Harmful if swallowed.
R31 Contact with acids liberates toxic gas.
S2 Keep out of the reach of children.
S25 Avoid contact with eyes.
S46 If swallowed, seek medical advice immediately and show this container or label.
Contains: sodium bisulphite 35%

16. OTHER INFORMATION.
Complete text of the R phrases that appear in section 3:
R22 Harmful if swallowed.
R31 Contact with acids liberates toxic gas.
The information given in this Safety Data Sheet has been drafted in accordance with REGULATION (EC) No 1907/2006 OF THE EUROPEAN PARLIAMENT AND OF THE COUNCIL of 18 December 2006 concerning the Registration, Evaluation,

Authorisation and Restriction of Chemicals (REACH), establishing a European Chemicals Agency, amending Directive 1999/45/EC and repealing Council Regulation (EEC) No 793/93 and Commission Regulation (EC) No 1488/94 as well as Council Directive 76/769/EEC and Commission Directives 91/155/EEC, 93/67/EEC, 93/105/EC and 2000/21/EC.

The information in this Safety Data Sheet on the Preparation is based on current knowledge and on current EC and national laws, as far as the working conditions of the users is beyond our knowledge and control. The product must not be used for purposes other than those that are specified without first having written instructions on how to handle. It is always the responsibility of the user to take the appropriate measures in order to comply with the requirements established by current legislation. The information contained in this Safety Sheet only states a description of the safety requirements for the preparation, and it must not be considered as a guarantee of its properties.

Sulfuric acid MSDS

Section 1: Chemical Product and Company Identification
Product Name: Sulfuric acid
Catalog Codes: SLS2539, SLS1741, SLS3166, SLS2371, SLS3793
CAS#: 7664-93-9
RTECS: WS5600000
TSCA: TSCA 8(b) inventory: Sulfuric acid
CI#: Not applicable.
Synonym: Oil of Vitriol; Sulfuric Acid
Chemical Name: Hydrogen sulfate
Chemical Formula: H2-SO4
Section 2: Composition and Information on Ingredients
Composition:
Name CAS # % by Weight
Sulfuric acid 7664-93-9 95 - 98
Toxicological Data on Ingredients: Sulfuric acid: ORAL (LD50): Acute: 2140 mg/kg [Rat.]. VAPOR (LC50): Acute: 510 mg/m
2 hours [Rat]. 320 mg/m 2 hours [Mouse].
Section 3: Hazards Identification
Potential Acute Health Effects:
Very hazardous in case of skin contact (corrosive, irritant, permeator), of eye contact (irritant, corrosive), of ingestion, of inhalation. Liquid or spray mist may produce tissue damage particularly on mucous membranes of eyes, mouth and respiratory tract. Skin contact may produce burns. Inhalation of the spray mist may produce severe irritation of respiratory tract, characterized by coughing, choking, or shortness of breath. Severe over-exposure can result in death. Inflammation of the eye is characterized by redness, watering, and itching. Skin inflammation is characterized by itching, scaling, reddening, or, occasionally, blistering.
Potential Chronic Health Effects:
CARCINOGENIC EFFECTS: Classified 1 (Proven for human.) by IARC, + (Proven.) by OSHA. Classified A2 (Suspected for human.) by ACGIH. MUTAGENIC EFFECTS: Not available. TERATOGENIC EFFECTS: Not available. DEVELOPMENTAL TOXICITY: Not available. The substance may be toxic to kidneys, lungs, heart, cardiovascular system, upper respiratory tract, eyes, teeth. Repeated or prolonged exposure to the substance can produce target organs damage. Repeated or prolonged
Page. 2

contact with spray mist may produce chronic eye irritation and severe skin irritation. Repeated or prolonged exposure to spray mist may produce respiratory tract irritation leading to frequent attacks of bronchial infection. Repeated exposure to a highly toxic material may produce general deterioration of health by an accumulation in one or many human organs.
Section 4: First Aid Measures
Eye Contact:
Check for and remove any contact lenses. In case of contact, immediately flush eyes with plenty of water for at least 15 minutes. Cold water may be used. Get medical attention immediately.
Skin Contact:
In case of contact, immediately flush skin with plenty of water for at least 15 minutes while removing contaminated clothing and shoes. Cover the irritated skin with an emollient. Cold water may be used.Wash clothing before reuse. Thoroughly clean shoes before reuse. Get medical attention immediately.
Serious Skin Contact:
Wash with a disinfectant soap and cover the contaminated skin with an anti-bacterial cream. Seek immediate medical attention.
Inhalation:
If inhaled, remove to fresh air. If not breathing, give artificial respiration. If breathing is difficult, give oxygen. Get medical attention immediately.
Serious Inhalation:
Evacuate the victim to a safe area as soon as possible. Loosen tight clothing such as a collar, tie, belt or waistband. If breathing is difficult, administer oxygen. If the victim is not breathing, perform mouth-to-mouth resuscitation. WARNING: It may
be hazardous to the person providing aid to give mouth-to-mouth resuscitation when the inhaled material is toxic, infectious or
corrosive. Seek immediate medical attention.
Ingestion:
Do NOT induce vomiting unless directed to do so by medical personnel. Never give anything by mouth to an unconscious person. Loosen tight clothing such as a collar, tie, belt or waistband. Get medical attention if symptoms appear.
Serious Ingestion: Not available.

Section 5: Fire and Explosion Data
Flammability of the Product: Non-flammable.
Auto-Ignition Temperature: Not applicable.
Flash Points: Not applicable.
Flammable Limits: Not applicable.
Products of Combustion:
Products of combustion are not available since material is non-flammable. However, products of decompostion include fumes of oxides of sulfur. Will react with water or steam to produce toxic and corrosive fumes. Reacts with carbonates to generate carbon dioxide gas. Reacts with cyanides and sulfides to form poisonous hydrogen cyanide and hydrogen sulfide respectively.
Fire Hazards in Presence of Various Substances: Combustible materials
Explosion Hazards in Presence of Various Substances:
Risks of explosion of the product in presence of mechanical impact: Not available. Risks of explosion of the product in presence of static discharge: Not available. Slightly explosive in presence of oxidizing materials.
Fire Fighting Media and Instructions: Not applicable.
Special Remarks on Fire Hazards:
Metal acetylides (Monocesium and Monorubidium), and carbides ignite with concentrated sulfuric acid. White Phosphorous + boiling Sulfuric acid or its vapor ignites on contact. May ignite other combustible materials. May cause fire when sulfuric acid is mixed with Cyclopentadiene, cyclopentanone oxime, nitroaryl amines, hexalithium disilicide, phorphorous (III) oxide, and oxidizing agents such as chlorates, halogens, permanganates.

Special Remarks on Explosion Hazards:
Mixturesofsulfuricacidandanyofthefollowingcanexplode:
p-nitrotoluene,
pentasilver trihydroxydiaminophosphate, perchlorates, alcohols with strong hydrogen peroxide, ammonium tetraperoxychromate, mercuric nitrite, potassium chlorate, potassium permanganate with potassium chloride, carbides, nitro compounds, nitrates, carbides, phosphorous, iodides, picratres, fulminats, dienes, alcohols (when heated) Nitramide decomposes explosively on contact with concentrated sulfuric acid. 1,3,5-Trinitrosohexahydro-1,3,5-triazine + sulfuric acid causes explosive decompositon.
Section 6: Accidental Release Measures
Small Spill:
Dilute with water and mop up, or absorb with an inert dry material and place in an appropriate waste disposal container. If necessary: Neutralize the residue with a dilute solution of sodium carbonate.
Large Spill:
Corrosive liquid. Poisonous liquid. Stop leak if without risk. Absorb with DRY earth, sand or other non-combustible material. Do not get water inside container. Do not touch spilled material. Use water spray curtain to divert vapor drift. Use water spray to reduce vapors. Prevent entry into sewers, basements or confined areas; dike if needed. Call for assistance on disposal. Neutralize the residue with a dilute solution of sodium carbonate. Be careful that the product is not present at a concentration level above TLV. Check TLV on the MSDS and with local authorities.
Section 7: Handling and Storage
Precautions:
Keep locked up.. Keep container dry. Do not ingest. Do not breathe gas/fumes/ vapor/spray. Never add water to this product. In case of insufficient ventilation, wear suitable respiratory equipment. If ingested, seek medical advice immediately and show the container or the label. Avoid contact with skin and eyes. Keep away from incompatibles such as oxidizing agents, reducing agents, combustible materials, organic materials, metals, acids, alkalis, moisture. May corrode metallic surfaces. Store in a metallic or coated fiberboard drum using a strong polyethylene inner package.
Storage:
Hygroscopic. Reacts. violently with water. Keep container tightly closed. Keep container in a cool, well-ventilated area. Do not store above 23°C (73.4°F).
Section 8: Exposure Controls/Personal Protection
Engineering Controls:
Provide exhaust ventilation or other engineering controls to keep the airborne concentrations of vapors below their respective threshold limit value. Ensure that eyewash stations and safety showers are proximal to the work-station location.
Personal Protection:
Face shield. Full suit. Vapor respirator. Be sure to use an approved/certified respirator or equivalent. Gloves. Boots.
Personal Protection in Case of a Large Spill:
Splash goggles. Full suit. Vapor respirator. Boots. Gloves. A self contained breathing apparatus should be used to avoid inhalation of the product. Suggested protective clothing might not be sufficient; consult a specialist BEFORE handling this product.

Exposure Limits:
TWA: 1 STEL: 3 (mg/m3) [Australia] Inhalation TWA: 1 (mg/m3) from OSHA (PEL) [United States] Inhalation TWA: 1 STEL: 3
(mg/m3) from ACGIH (TLV) [United States] [1999] Inhalation TWA: 1 (mg/m3) from NIOSH [United States] Inhalation TWA: 1 (mg/m3) [United Kingdom (UK)]Consult local authorities for acceptable exposure limits.

Section 9: Physical and Chemical Properties
Physical state and appearance: Liquid. (Thick oily liquid.)
Odor: Odorless, but has a choking odor when hot.
Taste: Marked acid taste. (Strong.)
Molecular Weight: 98.08 g/mole
Color: Colorless.
pH (1% soln/water): Acidic.
Boiling Point:
270°C (518°F) - 340 deg. C Decomposes at 340 deg. C
Melting Point: -35°C (-31°F) to 10.36 deg. C (93% to 100% purity)
Critical Temperature: Not available.
Specific Gravity: 1.84 (Water = 1)
Vapor Pressure: Not available.
Vapor Density: 3.4 (Air = 1)
Volatility: Not available.
Odor Threshold: Not available.
Water/Oil Dist. Coeff.: Not available.
Ionicity (in Water): Not available.
Dispersion Properties: See solubility in water.
Solubility:
Easily soluble in cold water. Sulfuric is soluble in water with liberation of much heat. Soluble in ethyl alcohol.
Section 10: Stability and Reactivity Data
Stability: The product is stable.
Instability Temperature: Not available.
Conditions of Instability:
Conditions to Avoid: Incompatible materials, excess heat, combustible material materials, organic materials, exposure to moist air or water, oxidizers, amines, bases. Always add the acid to water, never the reverse.
Incompatibility with various substances:
Reactive with oxidizing agents, reducing agents, combustible materials, organic materials, metals, acids, alkalis, moisture.
Corrosivity:
Extremely corrosive in presence of aluminum, of copper, of stainless steel(316). Highly corrosive in presence of stainless steel(304). Non-corrosive in presence of glass.
Special Remarks on Reactivity:
Hygroscopic. Strong oxidizer. Reacts violently with water and alcohol especially when water is added to the product. Incompatible (can react explosively or dangerously) with the following: ACETIC ACID, ACRYLIC ACID, AMMONIUM HYDROXIDE, CRESOL, CUMENE, DICHLOROETHYL ETHER, ETHYLENE CYANOHYDRIN, ETHYLENEIMINE, NITRIC ACID, 2-NITROPROPANE, PROPYLENE OXIDE, SULFOLANE, VINYLIDENE CHLORIDE, DIETHYLENE GLYCOL MONOMETHYL ETHER, ETHYL ACETATE, ETHYLENE CYANOHYDRIN, ETHYLENE GLYCOL MONOETHYL ETHER ACETATE, GLYOXAL, METHYL ETHYL KETONE, dehydrating agents, organic materials, moisture (water), Acetic anhydride, Acetone, cyanohydrin, Acetone+nitric acid, Acetone + potassium dichromate, Acetonitrile, Acrolein, Acrylonitrile, Acrylonitrile + water, Alcohols + hydrogen peroxide, ally compounds such as Allyl alcohol, and Allyl Chloride, 2-Aminoethanol, Ammonium hydroxide, Ammonium triperchromate, Aniline, Bromate + metals, Bromine pentafluoride, n-Butyraldehyde, Carbides, Cesium acetylene carbide, Chlorates, Cyclopentanone oxime, chlorinates, Chlorates + metals, Chlorine trifluoride, Chlorosulfonic acid, 2-cyano-4-nitrobenzenediazonium hydrogen sulfate, Cuprous nitride, p-chloronitrobenzene, 1,5-Dinitronaphthlene + sulfur, Diisobutylene, p-dimethylaminobenzaldehyde, 1,3-Diazidobenzene, Dimethylbenzylcarbinol + hydrogen peroxide, Epichlorohydrin, Ethyl alcohol + hydrogen peroxide, Ethylene diamine, Ethylene glycol and other glycols, Ethylenimine, Fulminates, hydrogen peroxide, Hydrochloric acid, Hydrofluoric acid, Iodine heptafluoride, Indane + nitric acid, Iron, Isoprene, Lithium silicide, Mercuric nitride, Mesityl oxide, Mercury nitride, Metals (powdered), Nitromethane, Nitric acid + glycerides, p-Nitrotoluene, Pentasilver trihydroxydiaminophosphate, Perchlorates, Perchloric acid, Permanganates + benzene, 1-Phenyl-2-methylpropyl alcohol + hydrogen peroxide, Phosphorus, Phosphorus isocyanate, Picrates, Potassium tert-butoxide, Potassium chlorate, Potassium Permanganate and other permanganates, halogens, amines, Potassium Permanganate + Potassium chloride, Potassium Permanganate + water, Propiolactone (beta)-, Pyridine, Rubidium aceteylene carbide, Silver permanganate, Sodium, Sodium carbonate, sodium hydroxide, Steel, styrene monomer, toluene + nitric acid, Vinyl acetate, Thalium (I) azidodithiocarbonate, Zinc chlorate, Zinc Iodide, azides, carbonates, cyanides, sulfides, sulfites, alkali hydrides, carboxylic acid anhydrides, nitriles, olefinic organics, aqueous acids, cyclopentadiene, cyano-alcohols, metal acetylides,

Hydrogen gas is generated by the action of the acid on most metals (i.e. lead, copper, tin, zinc, aluminum, etc.). Concentrated sulfuric acid oxidizes, dehydrates, or sulfonates most organic compounds.
Special Remarks on Corrosivity:
Non-corrosive to lead and mild steel, but dillute acid attacks most metals. Attacks many metals releasing hydrogen. Minor corrosive effect on bronze. No corrosion data on brass or zinc.
Polymerization: Will not occur.
Section 11: Toxicological Information
Routes of Entry: Absorbed through skin. Dermal contact. Eye contact. Inhalation. Ingestion.
Toxicity to Animals:

WARNING: THE LC50 VALUES HEREUNDER ARE ESTIMATED ON THE BASIS OF A 4-HOUR EXPOSURE. Acute oral toxicity (LD50): 2140 mg/kg [Rat.]. Acute toxicity of the vapor (LC50): 320 mg/m3 2 hours [Mouse].

Chronic Effects on Humans:
CARCINOGENIC EFFECTS: Classified 1 (Proven for human.) by IARC, + (Proven.) by OSHA. Classified A2 (Suspected for human.) by ACGIH. May cause damage to the following organs: kidneys, lungs, heart, cardiovascular system, upper respiratory tract, eyes, teeth.

Other Toxic Effects on Humans:
Extremely hazardous in case of inhalation (lung corrosive). Very hazardous in case of skin contact (corrosive, irritant, permeator), of eye contact (corrosive), of ingestion, .

Special Remarks on Toxicity to Animals: Not available.

Special Remarks on Chronic Effects on Humans:
Mutagenicity: Cytogenetic Analysis: Hamster, ovary = 4mmol/L Reproductive effects: May cause adverse reproductive effects based on animal data. Developmental abnormalities (musculoskeletal) in rabbits at a dose of 20 mg/m3 for 7 hrs.(RTECS) Teratogenecity: neither embryotoxic, fetoxic, nor teratogenetic in mice or rabbits at inhaled doses producing some maternal toxicity

Special Remarks on other Toxic Effects on Humans:
Acute Potential Health Effects: Skin: Causes severe skin irritation and burns. Continued contact can cause tissue necrosis. Eye: Causes severe eye irritation and burns. May cause irreversible eye injury. Ingestion: Harmful if swallowed. May cause permanent damage to the digestive tract. Causes gastrointestial tract burns. May cause perforation of the stomach, GI bleeding, edema of the glottis, necrosis and scarring, and sudden circulatory collapse(similar to acute inhalation). It may also cause systemic toxicity with acidosis. Inhalation: May cause severe irritation of the respiratory tract and mucous membranes with sore throat, coughing, shortness of breath, and delayed lung edema. Causes chemical burns to the repiratory
tract. Inhalation may be fatal as a result of spasm, inflammation, edema of the larynx and bronchi, chemical pneumonitis, and pulmonary edema. Cause corrosive action on mucous membranes. May affect cardiovascular system (hypotension, depressed cardiac output, bradycardia). Circulatory collapse with clammy skin, weak and rapid pulse, shallow respiration, and scanty urine may follow. Circulatory shock is often the immediate cause of death. May also affect teeth(changes in teeth and supporting structures - erosion, discoloration). Chronic Potential Health Effects: Inhalation: Prolonged or repeated inhalation may affect behavior (muscle contraction or spasticity), urinary system (kidney damage), and cardiovascular system, heart (ischemic heart leisons), and respiratory system/lungs(pulmonary edema, lung damage), teeth (dental discoloration, erosion). Skin: Prolonged or repeated skin contact may cause dermatitis, an allergic skin reaction.

Section 12: Ecological Information

Ecotoxicity: Ecotoxicity in water (LC50): 49 mg/l 48 hours [bluegill/sunfish].

BOD5 and COD: Not available.

Products of Biodegradation:
Possibly hazardous short term degradation products are not likely. However, long term degradation products may arise.

Toxicity of the Products of Biodegradation: The products of degradation are less toxic than the product itself.

Special Remarks on the Products of Biodegradation: Not available.

Section 13: Disposal Considerations

Waste Disposal:
Sulfuric acid may be placed in sealed container or absorbed in vermiculite, dry sand, earth, or a similar material. It may also be diluted and neutralized. Be sure to consult with local or regional authorities (waste regulators) prior to any disposal. Waste must be disposed of in accordance with federal, state and local environmental control regulations.

Section 14: Transport Information

DOT Classification: Class 8: Corrosive material

Identification: : Sulfuric acid UNNA: 1830 PG: II

Special Provisions for Transport: Not available.

Section 15: Other Regulatory Information

Federal and State Regulations:
Illinois toxic substances disclosure to employee act: Sulfuric acid New York release reporting list: Sulfuric acid Rhode Island RTK hazardous substances: Sulfuric acid Pennsylvania RTK: Sulfuric acid Minnesota: Sulfuric acid Massachusetts RTK: Sulfuric acid New Jersey: Sulfuric acid California Director's List of Hazardous Substances (8 CCR 339): Sulfuric acid Tennessee RTK: Sulfuric acid TSCA 8(b) inventory: Sulfuric acid SARA 302/304/311/312 extremely hazardous substances: Sulfuric acid SARA 313 toxic chemical notification and release reporting: Sulfuric acid CERCLA: Hazardous substances.: Sulfuric acid: 1000 lbs. (453.6 kg)

Other Regulations:
OSHA: Hazardous by definition of Hazard Communication Standard (29 CFR 1910.1200). EINECS: This product is on the European Inventory of Existing Commercial Chemical Substances.

Other Classifications:

WHMIS (Canada):
CLASS D-1A: Material causing immediate and serious toxic effects (VERY TOXIC). CLASS E: Corrosive liquid.

DSCL (EEC):
R35- Causes severe burns. S2- Keep out of the reach of children. S26- In case of contact with eyes, rinse immediately with plenty of water and seek medical advice. S30- Never add water to this product. S45- In case of accident or if you feel unwell, seek medical advice immediately (show the label where possible).

HMIS (U.S.A.):
Health Hazard: 3
Fire Hazard: 0
Reactivity: 2
Personal Protection:
National Fire Protection Association (U.S.A.):
Health: 3
Flammability: 0
Reactivity: 2
Specific hazard:
Protective Equipment:
Gloves. Full suit. Vapor respirator. Be sure to use an approved/certified respirator or equivalent. Wear appropriate respirator when ventilation is inadequate. Face shield.
Section 16: Other Information
References:
-Material safety data sheet emitted by: la Commission de la Santé et de la Sécurité du Travail du Québec. -The Sigma-Aldrich Library of Chemical Safety Data, Edition II. -Hawley, G.G.. The Condensed Chemical Dictionary, 11e ed., New York N.Y., Van Nostrand Reinold, 1987.
Other Special Considerations: Not available.
Created: 10/09/2005 11:58 PM
Last Updated: 06/09/2012 12:00 PM

Sodium Hydroxide, 50% MSDS

Section 1: Chemical Product and Company Identification
Product Name: Sodium Hydroxide, 50%
Catalog Codes: SLS3127, SLS4549
CAS#: Mixture.
RTECS: Not applicable.
TSCA: TSCA 8(b) inventory: Sodium hydroxide; Water
CI#: Not applicable.
Synonym: Sodium Hydroxide, 50% Solution
Chemical Name: Not applicable.
Chemical Formula: Not applicable.
Section 2: Composition and Information on Ingredients
Composition:
Name CAS # % by Weight
Sodium hydroxide 1310-73-2 50
Water 7732-18-5 50
Toxicological Data on Ingredients: Sodium hydroxide LD50: Not available. LC50: Not available.
Section 3: Hazards Identification
Potential Acute Health Effects:
Very hazardous in case of skin contact (corrosive, irritant, permeator), of eye contact (irritant, corrosive), of ingestion, . Slightly hazardous in case of inhalation (lung sensitizer). Liquid or spray mist may produce tissue damage particularly on mucous membranes of eyes, mouth and respiratory tract. Skin contact may produce burns. Inhalation of the spray mist may produce severe irritation of respiratory tract, characterized by coughing, choking, or shortness of breath. Severe over-exposure can result in death. Inflammation of the eye is characterized by redness, watering, and itching. Skin inflammation is characterized by itching, scaling, reddening, or, occasionally, blistering.
Potential Chronic Health Effects:
CARCINOGENIC EFFECTS: Not available. MUTAGENIC EFFECTS: Not available. TERATOGENIC EFFECTS: Not available.
DEVELOPMENTAL TOXICITY: Not available. The substance is toxic to lungs. Repeated or prolonged exposure to the substance can produce target organs damage. Repeated or prolonged contact with spray mist may produce chronic eye irritation and severe skin irritation. Repeated or prolonged exposure to spray mist may produce respiratory tract irritation leading to frequent attacks of bronchial infection. Repeated exposure to a highly toxic material may produce general deterioration of health by an accumulation in one or many human organs.
Section 4: First Aid Measures
Eye Contact:
Check for and remove any contact lenses. Immediately flush eyes with running water for at least 15 minutes, keeping eyelids open. Cold water may be used. Get medical attention immediately. Finish by rinsing thoroughly with running water to avoid a possible infection.
Skin Contact:
In case of contact, immediately flush skin with plenty of water for at least 15 minutes while removing contaminated clothing and shoes. Cover the irritated skin with an emollient. Cold water may be used.Wash clothing before reuse. Thoroughly clean shoes before reuse. Get medical attention immediately.
Serious Skin Contact:
Wash with a disinfectant soap and cover the contaminated skin with an anti-bacterial cream. Seek immediate medical attention.
Inhalation:
If inhaled, remove to fresh air. If not breathing, give artificial respiration. If breathing is difficult, give oxygen. Get medical attention immediately.
Serious Inhalation:
Evacuate the victim to a safe area as soon as possible. Loosen tight clothing such as a collar, tie, belt or waistband. If breathing is difficult, administer oxygen. If the victim is not breathing, perform mouth-to-mouth resuscitation. Seek medical attention.
Ingestion:
If swallowed, do not induce vomiting unless directed to do so by medical personnel. Never give anything by mouth to an unconscious person. Loosen tight clothing such as a collar, tie, belt or waistband. Get medical attention immediately.
Serious Ingestion: Not available.
Section 5: Fire and Explosion Data
Flammability of the Product: Non-flammable.
Auto-Ignition Temperature: Not applicable.
Flash Points: Not applicable.
Flammable Limits: Not applicable.
Products of Combustion: Not available.

Fire Hazards in Presence of Various Substances: Not applicable.
Explosion Hazards in Presence of Various Substances: Non-explosive in presence of open flames and sparks, of shocks.
Fire Fighting Media and Instructions: Not applicable.
Special Remarks on Fire Hazards: Not available.
Special Remarks on Explosion Hazards:
Sodium hydroxide reacts to form explosive products with ammonia + silver nitrate. Benzene extract of allyl benzene sulfonate prepared from allyl alcohol, and benzene sulfonyl chloride in presence of aquesous sodium hydroxide, under vacuum distillation, residue darkened and exploded. Sodium Hydroxde + impure tetrahydrofuran, which can contain peroxides, can cause serious explosions. Dry mixtures of sodium hydroxide and sodium tetrahydroborate liberate hydrogen explosively at 230-270 deg. C. Sodium Hydroxide reacts with sodium salt of trichlorophenol + methyl alcohol + trichlorobenzene + heat to cause an explosion. (Sodium hydroxide)
Section 6: Accidental Release Measures
Small Spill:
Dilute with water and mop up, or absorb with an inert dry material and place in an appropriate waste disposal container. If necessary: Neutralize the residue with a dilute solution of acetic acid.
Large Spill:
Corrosive liquid. Poisonous liquid. Stop leak if without risk. Absorb with DRY earth, sand or other non-combustible material. Do not get water inside container. Do not touch spilled material. Use water spray curtain to divert vapor drift. Use water spray to reduce vapors. Prevent entry into sewers, basements or confined areas; dike if needed. Call for assistance on disposal. Neutralize the residue with a dilute solution of acetic acid. Be careful that the product is not present at a concentration level above TLV. Check TLV on the MSDS and with local authorities.
Section 7: Handling and Storage
Precautions:
Do not ingest. Do not breathe gas/fumes/ vapor/spray. Never add water to this product. In case of insufficient ventilation, wear suitable respiratory equipment. If ingested, seek medical advice immediately and show the container or the label. Avoid contact with skin and eyes. Keep away from incompatibles such as oxidizing agents, reducing agents, metals, acids, alkalis, moisture.
Storage: Keep container tightly closed. Keep container in a cool, well-ventilated area.
Section 8: Exposure Controls/Personal Protection
Engineering Controls:
Provide exhaust ventilation or other engineering controls to keep the airborne concentrations of vapors below their respective threshold limit value.
Personal Protection:
Face shield. Full suit. Vapor respirator. Be sure to use an approved/certified respirator or equivalent. Gloves. Boots.
Personal Protection in Case of a Large Spill:
Splash goggles. Full suit. Vapor respirator. Boots. Gloves. A self contained breathing apparatus should be used to avoid inhalation of the product. Suggested protective clothing might not be sufficient; consult a specialist BEFORE handling this product.
Exposure Limits:
Sodium hydroxide STEL: 2 (mg/m3) from ACGIH (TLV) [United States] TWA: 2 CEIL: 2 (mg/m3) from OSHA (PEL) [United States] CEIL: 2 (mg/m3) from NIOSHConsult local authorities for acceptable exposure limits.
Section 9: Physical and Chemical Properties
Physical state and appearance: Liquid.
Odor: Odorless.
Taste: Alkaline. Bitter. (Strong.)
Molecular Weight: Not applicable.
Color: Clear Colorless.
pH (1% soln/water): Basic.
Boiling Point: 140°C (284°F)
Melting Point: 12°C (53.6°F)
Critical Temperature: Not available.
Specific Gravity: 1.53 (Water = 1)
Vapor Pressure: The highest known value is 2.3 kPa (@ 20°C) (Water).
Vapor Density: The highest known value is 0.62 (Air = 1) (Water).
Volatility: Not available.
Odor Threshold: Not available.
Water/Oil Dist. Coeff.: Not available.
Ionicity (in Water): Not available.
Dispersion Properties: See solubility in water.
Solubility: Easily soluble in cold water.
Section 10: Stability and Reactivity Data
Stability: The product is stable.
Instability Temperature: Not available.
Conditions of Instability: Excess heat, incompatible materials, water/moisture

Incompatibility with various substances:
Reactive with oxidizing agents, reducing agents, metals, acids, alkalis. Slightly reactive with water
Corrosivity:
Extremely corrosive in presence of aluminum, brass. Corrosive in presence of copper, of stainless steel(304), of stainless steel(316). Non-corrosive in presence of glass.
Special Remarks on Reactivity:
Hygroscopic. Much heat is evolved when solid material is dissolved in water. Therefore cold water and caution must be used for this process. Generates considerable heat when a sodium hydroxide solution is mixed with an acid Sodium hydroxide solution and octanol + diborane during a work-up of a reaction mixture of oxime and diborane in tetrahyrofuran is very exothermic, a mild explosion being noted on one occassion. Reactive with water, acids (mineral, non-oxidizing, e.g. hydrochloric, hydrofluoric acid, muriatic acid, phosphoric), acids (mineral, oxidizing e.g. chromic acid, hypochlorous acid, nitric acid, sulfuric acid), acids (organic e.g. acetic acid, benzoic acid, formic acid, methanoic acid, oxalic acid), aldehydes (e.g. acetaldehyde, acrolein, chloral hydrate, foraldehyde), carbamates (e.g. carbanolate, carbofuran), esters (e.g. butyl acetate, ethyl acetate, propyl formate), halogenated organics (dibromoethane, hexachlorobenzene, methyl chloride, trichloroethylene), isocyanates (e.g. methyl isocyanate), ketones (acetone, acetophenone, MEK, MIBK), acid chlorides, strong bases, strong oxidizing agents, strong reducing agents, flammable liquids, powdered metals and metals (i.e aluminum, tin, zinc, hafnium, raney nickel), metals (alkali and alkaline e.g. cesium, potassium, sodium), metal compounds (toxic e.g. berylium, lead acetate, nickel carbonyl, tetraethyl lead), mitrides (e.g. potassium nitride, sodium nitride), nitriles (e.g. acetonitrile, methyl cyanide), nitro compounds (organic e.g. nitrobenzene, nitromethane), acetic anhydride, hydroquinone, chlorohydrin, chlorosulfonic acid, ethylene cyanohydrin, glyoxal, hydrosulfuric acid, oleum, propiolactone, acylonitrile, phorosous pentoxide, chloroethanol, chloroform-methanol, tetrahydroborate, cyanogen azide, 1,2,4,5 tetrachlorobenzene, cinnamaldehyde. Reacts with formaldehyde hydroxide to yield formic acid, and hydrogen. (Sodium hydroxide)
Special Remarks on Corrosivity: Very caustic to aluminum and other metals in presence of moisture.
Polymerization: Will not occur.
Section 11: Toxicological Information
Routes of Entry: Absorbed through skin. Dermal contact. Eye contact. Inhalation.
Toxicity to Animals:
LD50: Not available. LC50: Not available.
Chronic Effects on Humans: Not available.
Other Toxic Effects on Humans:
Extremely hazardous in case of inhalation (lung corrosive). Very hazardous in case of skin contact (corrosive, irritant, permeator), of eye contact (corrosive), of ingestion, .
Special Remarks on Toxicity to Animals: Not available.
Special Remarks on Chronic Effects on Humans: Investigation as a mutagen (cytogenetic analysis), but no data available. (Sodium hydroxide)
Special Remarks on other Toxic Effects on Humans:
Acute Potential Health Effects: Skin: May be harmful if absorbed through skin. Causes severe skin irritation and burns. May cause deep penetrating ulcers of the skin. Eyes: Causes severe eye irritation and burns. May cause chemical conjunctivitis and corneal damage. Inhalation: Harmful if inhaled. Causes severe irritation of the respiratory tract and mucous membranes with coughing, burns, breathing difficulty, and possible coma. Irritation may lead the chemical pneumonitis and pulmonary edema. Causes chemical burns to the respiratory tract and mucous membranes. Ingestion: May be fatal if swallowed. May cause severe and permanent damage to the digestive tract. Causes
Section 12: Ecological Information
Ecotoxicity: Not available.
BOD5 and COD: Not available.
Products of Biodegradation:
Possibly hazardous short term degradation products are not likely. However, long term degradation products may arise.
Toxicity of the Products of Biodegradation: The products of degradation are less toxic than the product itself.
Special Remarks on the Products of Biodegradation: Not available.
Section 13: Disposal Considerations
Waste Disposal:
Waste must be disposed of in accordance with federal, state and local environmental control regulations.
Section 14: Transport Information
DOT Classification: Class 8: Corrosive material
Identification: : Sodium hydroxide, solution (Sodium hydroxide) UNNA: UN1824 PG: II
Special Provisions for Transport: Not available.
Section 15: Other Regulatory Information
Federal and State Regulations:
Illinois toxic substances disclosure to employee act: Sodium hydroxide Illinois chemical safety act: Sodium hydroxide New York release reporting list: Sodium hydroxide Rhode Island RTK hazardous substances: Sodium hydroxide Pennsylvania RTK: Sodium hydroxide Minnesota: Sodium hydroxide Massachusetts RTK: Sodium hydroxide New Jersey: Sodium hydroxide Louisiana spill reporting: Sodium hydroxide TSCA 8(b) inventory: Sodium hydroxide; Water CERCLA: Hazardous substances.: Sodium hydroxide: 1000 lbs. (453.6 kg);
Other Regulations: OSHA: Hazardous by definition of Hazard Communication Standard (29 CFR 1910.1200).
Other Classifications:

WHMIS (Canada):
CLASS D-2A: Material causing other toxic effects (VERY TOXIC). CLASS E: Corrosive liquid.
DSCL (EEC):
HMIS (U.S.A.):
Health Hazard: 3
Fire Hazard: 0
Reactivity: 1
Personal Protection:
National Fire Protection Association (U.S.A.):
Health: 3
Flammability: 0
Reactivity: 1
Specific hazard:
Protective Equipment:
Gloves. Full suit. Vapor respirator. Be sure to use an approved/certified respirator or equivalent. Wear appropriate respirator when ventilation is inadequate. Face shield.
Section 16: Other Information
References: Not available.
Other Special Considerations: Not available.
Created: 10/09/2005 06:32 PM
Last Updated: 06/09/2012 12:00 PM

Ferric Chloride, 41 Be' (40% w/v) MSDS

Section 1: Chemical Product and Company Identification
Product Name: Ferric Chloride, 41 Be' (40% w/v)
Catalog Codes: SLF1105
CAS#: Mixture.
RTECS: Not applicable.
TSCA: TSCA 8(b) inventory: Ferric chloride; Water
CI#: Not available.
Synonym:
Chemical Name: Not applicable.
Chemical Formula: Not applicable.
Section 2: Composition and Information on Ingredients
Composition:
Name CAS # % by Weight
Ferric chloride 7705-08-0 40
Water 7732-18-5 60
Toxicological Data on Ingredients: Ferric chloride: ORAL (LD50): Acute: 900 mg/kg [Rat]. 1278 mg/kg [Mouse].
Section 3: Hazards Identification
Potential Acute Health Effects:
Extremely hazardous in case of skin contact (irritant), of eye contact (irritant), of ingestion, of inhalation. Very hazardous in case of skin contact (corrosive). Liquid or spray mist may produce tissue damage particularly on mucous membranes of eyes, mouth and respiratory tract. Skin contact may produce burns. Inhalation of the spray mist may produce severe irritation of respiratory tract, characterized by coughing, choking, or shortness of breath. Inflammation of the eye is characterized by redness, watering, and itching. Skin inflammation is characterized by itching, scaling, reddening, or, occasionally, blistering.
Potential Chronic Health Effects:
Extremely hazardous in case of skin contact (irritant), of eye contact (irritant), of ingestion, of inhalation. Very hazardous in case of skin contact (corrosive). Non-sensitizer for skin. Non-permeator by skin. CARCINOGENIC EFFECTS: Not available. MUTAGENIC EFFECTS: Not available. TERATOGENIC EFFECTS: Not available. DEVELOPMENTAL TOXICITY: Not available. The substance is toxic to lungs, mucous membranes. Repeated or prolonged exposure to the substance can produce target organs damage. Repeated or prolonged contact with spray mist may produce chronic eye irritation and severe skin irritation. Repeated or prolonged exposure to spray mist may produce respiratory tract irritation leading to frequent attacks of bronchial infection. Repeated or prolonged inhalation of vapors may lead to chronic respiratory irritation.
Section 4: First Aid Measures
Eye Contact:
Check for and remove any contact lenses. Immediately flush eyes with running water for at least 15 minutes, keeping eyelids open. Cold water may be used. Do not use an eye ointment. Seek medical attention.
Skin Contact:
If the chemical got onto the clothed portion of the body, remove the contaminated clothes as quickly as possible, protecting your own hands and body. Place the victim under a deluge shower. If the chemical got on the victim's exposed skin, such as the hands : Gently and thoroughly wash the contaminated skin with running water and non-abrasive soap. Be particularly careful to clean folds, crevices, creases and groin. Cold water may be used. If irritation persists, seek medical attention. Wash contaminated clothing before reusing.
Serious Skin Contact:
Wash with a disinfectant soap and cover the contaminated skin with an anti-bacterial cream. Seek medical attention.
Inhalation: Allow the victim to rest in a well ventilated area. Seek immediate medical attention.
Serious Inhalation:
Evacuate the victim to a safe area as soon as possible. Loosen tight clothing such as a collar, tie, belt or waistband. If breathing is difficult, administer oxygen. If the victim is not breathing, perform mouth-to-mouth resuscitation. WARNING: It may be hazardous to the person providing aid to give mouth-to-mouth resuscitation when the inhaled material is toxic, infectious or corrosive. Seek immediate medical attention.
Ingestion:
Do not induce vomiting. Loosen tight clothing such as a collar, tie, belt or waistband. If the victim is not breathing, perform mouth-to-mouth resuscitation. Seek immediate medical attention.
Serious Ingestion: Not available.
Section 5: Fire and Explosion Data
Flammability of the Product: Non-flammable.
Auto-Ignition Temperature: Not applicable.
Flash Points: Not applicable.
Flammable Limits: Not applicable.
Products of Combustion: Not available.
Fire Hazards in Presence of Various Substances: Not applicable.

Explosion Hazards in Presence of Various Substances:
Risks of explosion of the product in presence of mechanical impact: Not available. Risks of explosion of the product in presence of static discharge: Not available.
Fire Fighting Media and Instructions: Not applicable.
Special Remarks on Fire Hazards: Not available.
Special Remarks on Explosion Hazards: Not available.
Section 6: Accidental Release Measures
Small Spill:
Dilute with water and mop up, or absorb with an inert dry material and place in an appropriate waste disposal container. If necessary: Neutralize the residue with a dilute solution of sodium carbonate.
Large Spill:
Corrosive liquid. Stop leak if without risk. Absorb with DRY earth, sand or other non-combustible material. Do not get water inside container. Do not touch spilled material. Use water spray curtain to divert vapor drift. Prevent entry into sewers, basements or confined areas; dike if needed. Call for assistance on disposal. Neutralize the residue with a dilute solution of sodium carbonate. Be careful that the product is not present at a concentration level above TLV. Check TLV on the MSDS and with local authorities.
Section 7: Handling and Storage
Precautions:
Keep container dry. Do not ingest. Do not breathe gas/fumes/ vapour/spray. Never add water to this product In case of insufficient ventilation, wear suitable respiratory equipment If ingested, seek medical advice immediately and show the container or the label. Avoid contact with skin and eyes
Storage:
May corrode metallic surfaces. Store in a metallic or coated fiberboard drum using a strong polyethylene inner package. Corrosive materials should be stored in a separate safety storage cabinet or room.
Section 8: Exposure Controls/Personal Protection
Engineering Controls:
Provide exhaust ventilation or other engineering controls to keep the airborne concentrations of vapors below their respective threshold limit value. Ensure that eyewash stations and safety showers are proximal to the work-station location.
Personal Protection:
Face shield. Full suit. Vapor respirator. Be sure to use an approved/certified respirator or equivalent. Gloves. Boots.
Personal Protection in Case of a Large Spill:
Splash goggles. Full suit. Vapor respirator. Boots. Gloves. A self contained breathing apparatus should be used to avoid inhalation of the product. Suggested protective clothing might not be sufficient; consult a specialist BEFORE handling this product.
Exposure Limits:
Ferric chloride TWA: 1 CEIL: 2 (mg/m3)Consult local authorities for acceptable exposure limits.
Section 9: Physical and Chemical Properties
Physical state and appearance: Liquid.
Odor: Not available.
Taste: Not available.
Molecular Weight: Not applicable.
Color: Yellowish-brown. (Dark.)
pH (1% soln/water): Acidic.
Boiling Point: The lowest known value is 100°C (212°F) (Water).
Melting Point: Not available.
Critical Temperature: Not available.
Specific Gravity: 1.394 (Water = 1)
Vapor Pressure: The highest known value is 17.535 mm of Hg (@ 20°C) (Water).
Vapor Density: The highest known value is 0.62 (Air = 1) (Water).
Volatility: Not available.
Odor Threshold: Not available.
Water/Oil Dist. Coeff.: Not available.
Ionicity (in Water): Not available.
Dispersion Properties: See solubility in water.
Solubility: Easily soluble in cold water, hot water.
Section 10: Stability and Reactivity Data
Stability: The product is stable.
Instability Temperature: Not available.
Conditions of Instability: Not available.
Incompatibility with various substances: Not available.
Corrosivity:
Highly corrosive in presence of copper. Non-corrosive in presence of glass.
Special Remarks on Reactivity: Not available.
Special Remarks on Corrosivity: Not available.

Polymerization: No.
Section 11: Toxicological Information
Routes of Entry: Eye contact. Inhalation. Ingestion.
Toxicity to Animals: Acute oral toxicity (LD50): 2250 mg/kg (Rat) (Calculated value for the mixture).
Chronic Effects on Humans: The substance is toxic to lungs, mucous membranes.
Other Toxic Effects on Humans:
Extremely hazardous in case of skin contact (irritant), of ingestion, of inhalation. Very hazardous in case of skin contact (corrosive).
Special Remarks on Toxicity to Animals: Not available.
Special Remarks on Chronic Effects on Humans: Not available.
Special Remarks on other Toxic Effects on Humans: Not available.
Section 12: Ecological Information
Ecotoxicity: Not available.
BOD5 and COD: Not available.
Products of Biodegradation:
Possibly hazardous short term degradation products are not likely. However, long term degradation products may arise.
Toxicity of the Products of Biodegradation: The product itself and its products of degradation are not toxic.
Special Remarks on the Products of Biodegradation: Not available.
Section 13: Disposal Considerations
Waste Disposal:
Section 14: Transport Information
DOT Classification: CLASS 8: Corrosive liquid.
Identification: : Ferric chloride, Solution (Ferric chloride) : UN2582 PG: III
Special Provisions for Transport: Not available.
Section 15: Other Regulatory Information
Federal and State Regulations:
Pennsylvania RTK: Ferric chloride Massachusetts RTK: Ferric chloride TSCA 8(b) inventory: Ferric chloride; Water CERCLA: Hazardous substances.: Ferric chloride;
Other Regulations: OSHA: Hazardous by definition of Hazard Communication Standard (29 CFR 1910.1200).
Other Classifications:
WHMIS (Canada):
CLASS D-2A: Material causing other toxic effects (VERY TOXIC). CLASS E: Corrosive liquid.
DSCL (EEC): R35- Causes severe burns.
HMIS (U.S.A.):
Health Hazard: 3
Fire Hazard: 0
Reactivity: 0
Personal Protection:
National Fire Protection Association (U.S.A.):
Health: 3
Flammability: 0
Reactivity: 0
Specific hazard:
Protective Equipment:
Gloves. Full suit. Vapor respirator. Be sure to use an approved/certified respirator or equivalent. Wear appropriate respirator when ventilation is inadequate. Face shield.
Section 16: Other Information
References: Not available.
Other Special Considerations: Not available.
Created: 10/09/2005 05:32 PM
Last Updated: 06/09/2012 12:00 PM

Magnesium Sulfate Anhydrous MSDS

Section 1: Chemical Product and Company Identification
Product Name: Magnesium sulfate anhydrous
Catalog Codes: SLM2992, SLM2227
CAS#: 7487-88-9
RTECS: OM4500000
TSCA: TSCA 8(b) inventory: Magnesium sulfate anhydrous
CI#: Not available.
Synonym:
Chemical Formula: MgSO4
Contact Information:
Sciencelab.com, Inc.
14025 Smith Rd.
Houston, Texas 77396
US Sales: **1-800-901-7247**
International Sales: **1-281-441-4400**
Order Online: ScienceLab.com
CHEMTREC (24HR Emergency Telephone), call:
1-800-424-9300
International CHEMTREC, call: 1-703-527-3887
For non-emergency assistance, call: 1-281-441-4400
Section 2: Composition and Information on Ingredients
Composition:
Name CAS # % by Weight
Magnesium sulfate anhydrous 7487-88-9 100
Toxicological Data on Ingredients: Not applicable.
Section 3: Hazards Identification
Potential Acute Health Effects:
Hazardous in case of ingestion. Slightly hazardous in case of skin contact (irritant), of eye contact (irritant), of inhalation.
Potential Chronic Health Effects:
CARCINOGENIC EFFECTS: Not available. MUTAGENIC EFFECTS: Not available. TERATOGENIC EFFECTS: Not available.
DEVELOPMENTAL TOXICITY: Not available. Repeated or prolonged exposure is not known to aggravate medical condition.
Section 4: First Aid Measures
Eye Contact: Immediately flush eyes with running water for at least 15 minutes, keeping eyelids open. Cold water may be used.
Skin Contact:
After contact with skin, wash immediately with plenty of water. Gently and thoroughly wash the contaminated skin with running water and non-abrasive soap. Be particularly careful to clean folds, crevices, creases and groin. Cold water may be used. Cover the irritated skin with an emollient. If irritation persists, seek medical attention.
Serious Skin Contact: Not available.
Inhalation: Allow the victim to rest in a well ventilated area. Seek immediate medical attention.
Serious Inhalation: Not available.
Ingestion:
Do not induce vomiting. Loosen tight clothing such as a collar, tie, belt or waistband. If the victim is not breathing, perform mouth-to-mouth resuscitation. Seek immediate medical attention.
Serious Ingestion: Not available.
Section 5: Fire and Explosion Data
Flammability of the Product: Non-flammable.
Auto-Ignition Temperature: Not applicable.
Flash Points: Not applicable.
Flammable Limits: Not applicable.
Products of Combustion: Not available.
Fire Hazards in Presence of Various Substances: Not applicable.
Explosion Hazards in Presence of Various Substances:
Risks of explosion of the product in presence of mechanical impact: Not available. Risks of explosion of the product in presence of static discharge: Not available.
Fire Fighting Media and Instructions: Not applicable.
Special Remarks on Fire Hazards: Not available.
Special Remarks on Explosion Hazards: Not available.
Section 6: Accidental Release Measures
Small Spill:

Use appropriate tools to put the spilled solid in a convenient waste disposal container. Finish cleaning by spreading water on the contaminated surface and dispose of according to local and regional authority requirements.

Large Spill:

Use a shovel to put the material into a convenient waste disposal container. Finish cleaning by spreading water on the contaminated surface and allow to evacuate through the sanitary system.

Section 7: Handling and Storage

Precautions: No specific safety phrase has been found applicable for this product.

Storage:

No specific storage is required. Use shelves or cabinets sturdy enough to bear the weight of the chemicals. Be sure that it is not necessary to strain to reach materials, and that shelves are not overloaded.

Section 8: Exposure Controls/Personal Protection

Engineering Controls:

Use process enclosures, local exhaust ventilation, or other engineering controls to keep airborne levels below recommended exposure limits. If user operations generate dust, fume or mist, use ventilation to keep exposure to airborne contaminants below the exposure limit.

Personal Protection: Safety glasses. Lab coat. Dust respirator. Be sure to use an approved/certified respirator or equivalent. Gloves.

Personal Protection in Case of a Large Spill:

Splash goggles. Full suit. Dust respirator. Boots. Gloves. A self contained breathing apparatus should be used to avoid inhalation of the product. Suggested protective clothing might not be sufficient; consult a specialist BEFORE handling this product.

Exposure Limits: Not available.

Section 9: Physical and Chemical Properties

Physical state and appearance: Solid.

Odor: Not available.

Taste: Not available.

Molecular Weight: 120.38 g/mole

Color: Not available.

pH (1% soln/water): Not available.

Boiling Point: Not available.

Melting Point: Not available.

Critical Temperature: Not available.

Specific Gravity: Not available.

Vapor Pressure: Not applicable.

Vapor Density: Not available.

Volatility: Not available.

Odor Threshold: Not available.

Water/Oil Dist. Coeff.: Not available.

Ionicity (in Water): Not available.

Dispersion Properties: See solubility in water.

Solubility: Easily soluble in cold water.

Section 10: Stability and Reactivity Data

Stability: The product is stable.

Instability Temperature: Not available.

Conditions of Instability: Not available.

Incompatibility with various substances: Not available.

Corrosivity: Non-corrosive in presence of glass.

Special Remarks on Reactivity: Not available.

Special Remarks on Corrosivity: Not available.

Polymerization: No.

Section 11: Toxicological Information

Routes of Entry: Ingestion.

Toxicity to Animals:

LD50: Not available. LC50: Not available.

Chronic Effects on Humans: Not available.

Other Toxic Effects on Humans:

Hazardous in case of ingestion. Slightly hazardous in case of skin contact (irritant), of inhalation.

Special Remarks on Toxicity to Animals: Not available.

Special Remarks on Chronic Effects on Humans: Human: passes through the placenta, excreted in maternal milk.

Special Remarks on other Toxic Effects on Humans: Not available.

Section 12: Ecological Information

Ecotoxicity: Not available.

BOD5 and COD: Not available.

Products of Biodegradation:

Possibly hazardous short term degradation products are not likely. However, long term degradation products may arise.
Toxicity of the Products of Biodegradation: The products of degradation are more toxic.
Special Remarks on the Products of Biodegradation: Not available.
Section 13: Disposal Considerations
Waste Disposal:
Section 14: Transport Information
DOT Classification: Not a DOT controlled material (United States).
Identification: Not applicable.
Special Provisions for Transport: Not applicable.
Section 15: Other Regulatory Information
Federal and State Regulations: TSCA 8(b) inventory: Magnesium sulfate anhydrous
Other Regulations: Not available..
Other Classifications:
WHMIS (Canada): Not controlled under WHMIS (Canada).
DSCL (EEC):
This product is not classified according to the EU regulations.
HMIS (U.S.A.):
Health Hazard: 1
Fire Hazard: 0
Reactivity: 0
Personal Protection: E
National Fire Protection Association (U.S.A.):
Health: 1
Flammability: 0
Reactivity: 0
Specific hazard:
Protective Equipment:
Gloves. Lab coat. Dust respirator. Be sure to use an approved/certified respirator or equivalent. Safety glasses.
Section 16: Other Information
References: Not available.
Other Special Considerations: Not available.
Created: 10/10/2005 08:22 PM
Last Updated: 06/09/2012 12:00 PM

Dihydroxyaluminum Sodium Carbonate MSDS

Section 1: Chemical Product and Company Identification
Product Name: Dihydroxyaluminum Sodium Carbonate
Catalog Codes: SLD2683
CAS#: 16482-55-6
RTECS: Not available.
TSCA: TSCA 8(b) inventory: No products were found.
CI#: Not available.
Synonym: Rolaids; Aluminum sodium carbonate hydroxide; Sodium aluminum, hydroxycarbonate; Aluminate(1-), (carbonato)dihydroxy-, sodium
Chemical Name: Dihydroxyaluminum Sodium Carbonate
Chemical Formula: NaAl(OH)2CO3
Section 2: Composition and Information on Ingredients
Composition:
Name CAS # % by Weight
Dihydroxyaluminum Sodium Carbonate 16482-55-6 100
Toxicological Data on Ingredients: Not applicable.
Section 3: Hazards Identification
Potential Acute Health Effects: Slightly hazardous in case of skin contact (irritant), of eye contact (irritant), of ingestion, or inhalation.
Potential Chronic Health Effects:
CARCINOGENIC EFFECTS: Classified 4 (No evidence.) by NTP, None. by OSHA, None. by NIOSH. MUTAGENIC EFFECTS: Not available. TERATOGENIC EFFECTS: Not available. DEVELOPMENTAL TOXICITY: Not available. Repeated or prolonged exposure is not known to aggravate medical condition.
Section 4: First Aid Measures
Eye Contact:
Check for and remove any contact lenses. In case of contact, immediately flush eyes with plenty of water for at least 15 minutes. Get medical attention if irritation occurs.
Skin Contact: Wash with soap and water. Cover the irritated skin with an emollient. Get medical attention if irritation develops.
Serious Skin Contact: Not available.
Inhalation:
If inhaled, remove to fresh air. If not breathing, give artificial respiration. If breathing is difficult, give oxygen. Get medical attention.
Serious Inhalation: Not available.
Ingestion:
Do NOT induce vomiting unless directed to do so by medical personnel. Never give anything by mouth to an unconscious person. If large quantities of this material are swallowed, call a physician immediately. Loosen tight clothing such as a collar, tie, belt or waistband.
Serious Ingestion: Not available.
Section 5: Fire and Explosion Data
Flammability of the Product: Non-flammable.
Auto-Ignition Temperature: Not applicable.
Flash Points: Not applicable.
Flammable Limits: Not applicable.
Products of Combustion: Not available.
Fire Hazards in Presence of Various Substances: Not applicable.
Explosion Hazards in Presence of Various Substances:
Risks of explosion of the product in presence of mechanical impact: Not available. Risks of explosion of the product in presence of static discharge: Not available.
Fire Fighting Media and Instructions: Not applicable.
Special Remarks on Fire Hazards: Not available.
Special Remarks on Explosion Hazards: Not available.
Section 6: Accidental Release Measures
Small Spill:
Use appropriate tools to put the spilled solid in a convenient waste disposal container. Finish cleaning by spreading water on the contaminated surface and dispose of according to local and regional authority requirements.
Large Spill:
Use a shovel to put the material into a convenient waste disposal container. Finish cleaning by spreading water on the contaminated surface and allow to evacuate through the sanitary system.
Section 7: Handling and Storage

Precautions: Do not breathe dust. Keep away from incompatibles such as acids.
Storage: Keep container tightly closed. Keep container in a cool, well-ventilated area.
Section 8: Exposure Controls/Personal Protection
Engineering Controls:
Use process enclosures, local exhaust ventilation, or other engineering controls to keep airborne levels below recommended exposure limits. If user operations generate dust, fume or mist, use ventilation to keep exposure to airborne contaminants below the exposure limit.
Personal Protection: Safety glasses. Lab coat. Dust respirator. Be sure to use an approved/certified respirator or equivalent. Gloves.
Personal Protection in Case of a Large Spill:
Splash goggles. Full suit. Dust respirator. Boots. Gloves. A self contained breathing apparatus should be used to avoid inhalation of the product. Suggested protective clothing might not be sufficient; consult a specialist BEFORE handling this product.
Exposure Limits: Not available.
Section 9: Physical and Chemical Properties
Physical state and appearance: Solid. (Powdered solid.)
Odor: Not available.
Taste: Not available.
Molecular Weight: 144 g/mole
Color: White.
pH (1% soln/water): Not applicable.
Boiling Point: Not available.
Melting Point: Not available.
Critical Temperature: Not available.
Specific Gravity: 0.8 (Water = 1)
Vapor Pressure: Not applicable.
Vapor Density: Not available.
Volatility: Not available.
Odor Threshold: Not available.
Water/Oil Dist. Coeff.: Not available.
Ionicity (in Water): Not available.
Dispersion Properties: Is not dispersed in cold water, hot water.
Solubility: Insoluble in cold water, hot water.
Section 10: Stability and Reactivity Data
Stability: The product is stable.
Instability Temperature: Not available.
Conditions of Instability: Excess heat, incompatible materials
Incompatibility with various substances: Reactive with acids.
Corrosivity: Not available.
Special Remarks on Reactivity: Not available.
Special Remarks on Corrosivity: Not available.
Polymerization: Will not occur.
Section 11: Toxicological Information
Routes of Entry: Absorbed through skin. Dermal contact. Eye contact. Inhalation. Ingestion.
Toxicity to Animals:
LD50: Not available. LC50: Not available.
Chronic Effects on Humans: CARCINOGENIC EFFECTS: Classified 4 (No evidence.) by NTP, None. by OSHA, None. By NIOSH.
Other Toxic Effects on Humans: Slightly hazardous in case of skin contact (irritant), of ingestion, of inhalation.
Special Remarks on Toxicity to Animals: Not available.
Special Remarks on Chronic Effects on Humans: Not available.
Special Remarks on other Toxic Effects on Humans:
Acute Potential Health Effects: May cause skin irritation and dry skin. Eyes: Causes eye irritation. Inhalation: Excess inhalation may cause local irritation of the throat and respiratory tract. Ingestion: Low toxicity. Low hazard. Approved by FDA for use as an antacid.
Section 12: Ecological Information
Ecotoxicity: Not available.
BOD5 and COD: Not available.
Products of Biodegradation:
Possibly hazardous short term degradation products are not likely. However, long term degradation products may arise.
Toxicity of the Products of Biodegradation: The product itself and its products of degradation are not toxic.
Special Remarks on the Products of Biodegradation: Not available.
Section 13: Disposal Considerations

Waste Disposal:
Waste must be disposed of in accordance with federal, state and local environmental control regulations.
Section 14: Transport Information
DOT Classification: Not a DOT controlled material (United States).
Identification: Not applicable.
Special Provisions for Transport: Not applicable.
Section 15: Other Regulatory Information
Federal and State Regulations: No products were found.
Other Regulations: EINECS: This product is on the European Inventory of Existing Commercial Chemical Substances.
Other Classifications:
WHMIS (Canada): Not controlled under WHMIS (Canada).
DSCL (EEC):
This product is not classified according to the EU regulations. Not applicable.
HMIS (U.S.A.):
Health Hazard: 1
Fire Hazard: 0
Reactivity: 0
Personal Protection: E
National Fire Protection Association (U.S.A.):
Health: 1
Flammability: 0
Reactivity: 0
Specific hazard:
Protective Equipment:
Gloves. Lab coat. Dust respirator. Be sure to use an approved/certified respirator or equivalent. Safety glasses.

Section 16: Other Information

References: Not available.
Other Special Considerations: Not available.
Created: 10/10/2005 01:03 AM
Last Updated: 06/09/2012 12:00 PM

Hydrated lime

MATERIAL SAFETY DATA SHEET

(Prepared in accordance with Annex II of the REACH Regulation (EC) 1907/2006)

1: Identification of the substance / preparation and of the company / undertaking

1.1: Identification of the substance or preparation

Substance Name **Hydrated lime**

Synonyms

Slaked lime, Air slaked lime, Building lime, Fat lime, Chemical lime, Coarse Lime, Finishing lime, Mason's lime, Calcium dihydroxide, Calcium hydroxide, Calcium hydrate, Lime, Lime water, Bulk Hydrate, Hydrated Lime, Milk of Lime, Thick Lime Milk, Lime Putty, Bagged Hydrate, Hydrapure, White Rhino, White Rhino Hydrated Lime.

Please note that this list may not be exhaustive.

Chemical Name and Formula **Calcium dihydroxide – Ca(OH)2**

Trade Name **Hydrapure, White Rhino Hydrated Lime**

CAS N° 1305-62-0

EINECS N° 215-137-3

Molecular Weight 74,09

1.2: Use of the substance

Building material industry
Chemical industry
Agriculture
Biocidal use
Environmental protection (e.g. flue gas treatment, waste water treatment, sludge treatment)
Drinking water treatment
Feed, food and pharmaceutical industry
Civil engineering
Paper and paint industry
Glass industry

Hydrated Lime MSDS – Page 2/7

2: Hazard identification

2.1: Indication of hazard

Xi Irritant

2.2: Human health

Risk phrases

R37 Irritating to respiratory system
R38 Irritating to skin
R41 Risk of serious damage to eyes

Warning phrase

In contrast to the powder itself, the product, when diluted with water, can produce severe skin damage in humans, (alkaline burns), especially if prolonged skin contacts takes place.

3: Composition / information on ingredients

3.1: Composition

Calcium dihydroxide, and minor constituents of geological origin, varying from source to source.

4: First–aid measures

4.1: Eyes

Irrigate eyes immediately with plenty of water and seek medical advice.

4.2: Inhalation

Move source of dust or move person to fresh air.
Obtain medical attention immediately.

4.3: Ingestion

Wash mouth with water and drink copious quantities of water. Do not induce vomiting. Seek medical advice immediately.

4.4: Skin

Carefully and gently brush the contaminated body surfaces in order to remove all traces of product. Wash affected area immediately with plenty of water. Remove contaminated clothing. If necessary seek medical advice.

4.5: General advise

No known delayed effects. Consult a physician for all exposures except for minor instances.

5: Fire-fighting measures

5.1: Flammability

The substance is not flammable, and noncombustible,

it inhibits the spread of flame.
Hydrated Lime MSDS – Page 3/7
5.2: Extinguishing media
The product does not burn. Use a dry powder, foam
or CO2 type of fire extinguishers to fight the
surrounding fire.
5.3: Combustion products
When heated above 580°C, calcium hydroxide decomposes to produce calcium oxide (CaO) and water (H2O). Calcium oxide reacts with water and generates heat. This may cause risk to flammable material.
6: Accidental release measures
6.1: Personal precautions
Avoid contact with skin and eyes, keep dust levels to a minimum, and ensure that sufficient ventilation or
suitable respiratory protective equipment is used (section 8).
6.2: Environmental precautions
Contain the spillage. Keep the material dry if possible. Cover area if possible to avoid unnecessary
dust hazard. Avoid uncontrolled spills to watercourses and drains (pH rising). Any large
spillage into watercourses must be alerted to the Environment Agency or other regulatory body.
6.3: Methods for cleaning up
Keep the material dry if possible. Pick up the product mechanically in a dry way. Use vacuum suction unit,
or shovel into bags.
7: Handling and storage
7.1: Handling
7.1.1: Precautions for safe handling
Avoid contact with skin and eyes. Wear protective equipment (see section 8). Keep dust levels to a minimum. Minimize dust generation. Enclose dust sources, use exhaust ventilation (dust collector at handling points). Handling systems should preferably be enclosed. When handling bags usual precautions should be paid to the risks outlined in the Council Directive 90/269/EEC.
7.2: Storage
7.2.1: Precautions for safe storage
Store under dry conditions. Minimise contact with air and moisture. Bulk storage should be in purpose –designed silos. Keep away from acids, significant quantities of paper, straw, and nitro compounds. Keep out of reach of children. Do not use aluminium for transport or storage if there is a risk of contact with water.
Hydrated Lime MSDS – Page 4/7
8: Exposure controls / personal protection
8.1: Exposure limit values
8.1.1: CAS N° / EINECS N° 1305-62-0 / 215-137-3
8.1.2: Chemical name Calcium dihydroxide
8.1.3: Occupational exposure standard (OES) (OEL) 5mg/m3, (8hr TWA)
8.2: Exposure controls
8.2.1: Occupational exposure controls
Handling systems should preferably be enclosed or suitable ventilation installed to maintain atmospheric
dust below the OES, if not wear suitable protective equipment.
8.2.1.1: Respiratory protection
Use appropriate respiratory protection against particles according to the risk level.
8.2.1.2: Hand protection
Use approved nitrile impregnated gloves having CE marks.
8.2.1.3: Eye protection
Tight fitting goggles with side shields, or wide vision
full goggles. Do not wear contact lenses when handling this product.
It is also advisable to have individualpocket eyewash.
8.2.1.4: Skin protection
Use clothing fully covering skin, full length pants, long sleeved overalls, with close fittings at openings.
Footwear resistant to caustics, and avoiding dust penetration.
8.2.1.5: General safety and hygiene measure Wear clean, dry personal protective equipment. Barrier cream can be used if necessary. If heavily exposed daily, employees must shower, and if necessary use a barrier cream to protect exposed skin, particularly neck, face and wrists.
8.2.2: Environmental exposure controls. All ventilation systems should be filtered before
discharge to atmosphere.
9: Physical and chemical properties
9.1: General information
9.1.1: Appearance White or off white (beige) fine powder.
9.1.2: Odor Slight earthy odor.
9.2: Important health, safety and environmental information
pH 12,4 Ca(OH)2 saturated solution at 25°C
Solubility in water

1850 mg/l at 0°C
1650 mg/l at 20°C
770 mg/l at 100°C
Hydrated Lime MSDS – Page 5/7
9.3: Other information
Melting point Decomposition at 580°C, to form CaO and H2O
Boiling point Not applicable
Specific gravity 2,24 g/cm3 at 20°C
Bulk density 200 – 800 kg/m3 at 20°C
Vapour pressure Non volatile
Partition coefficient Not applicable
Flash point Not applicable
Flammability Not flammable
Explosive properties Not flammable
10: Stability and reactivity
10.1: Conditions to avoid
Minimise exposure to air and moisture to avoid degradation.
When heated above 580°C, calcium hydroxide decomposes to produce calcium oxide (CaO) and water (H2O): Ca(OH)2 □□CaO + H2O
10.2: Materials to avoid
Calcium hydroxide reacts with carbon dioxide to form Calcium carbonate:
Ca(OH)2 + CO2 □□CaCO3 + H2O Calcium hydroxide reacts with acids to form Calcium salts. Calcium hydroxide reacts with aluminium and brass in the presence of moisture,under formation (or release) of hydrogen gas: Ca(OH)2 + 2 Al + 6 H2O → Ca(Al (OH)4)2 + 3 H2
10.3: Additional remarks
Calcium dihydroxide absorbs carbon dioxide from air to form calcium carbonate, which is a common material in the nature.
11: Toxicological information
11.1: Acute effect
Eye contact Risk of serious damage to eyes. Inhalation Inhalation of dust causes discomfort to the upper respiratory tract. Irritant to the respiratory tract in high concentration of dust.
Ingestion: Calcium dihydroxide is not toxic, a large amount may cause irritation to the gastrointestinal tract. Skin contact Irritating to skin in the presence of moisture.
11.2: Long term exposure
Eye contact Risk of serious damage to eyes.
Inhalation: Prolonged and repeated inhalation of dust may affect the respiratory tract.

Skin contact
In case of prolonged skin contact, product may cause serious damage to skin in combination with moisture.
Hydrated Lime MSDS – Page 6/7
12: Ecological information
12.1: Ecotoxicity
12.1.1: Acute/Prolonged toxicity to fish
On Gambusia affinis LC50 = 160 mg/l for 96 hours, the substance is non-toxic, because LC50-value is > 100 mg/l.
12.1.2: Acute/Prolonged toxicity to aquatic invertebrates
No test data
12.1.3: Acute/Prolonged toxicity to aquatic plants
No test data
12.1.4: Toxicity to micro-organisms e.g. bacteria
At high concentration, through the rise of pH, calcium dihydroxide is used for disinfection of sewage sludges.
12.1.5: Chronic toxicity to aquatic organisms No data
12.1.6: Toxicity to soil dwelling organisms No data
12.1.7: Toxicity to terrestrial plants
No data, but calcium dihydroxide is used as a fertilizer.
12.1.8: General effect
Acute pH-effect. Although this product is useful to correct water acidity, an excess of more than 1 g/l may be harmful to aquatic life. pH-value of > 12 will rapidly decrease as result of dilution and carbonation.

12.2: Mobility
Calcium dihydroxide reacts and/or carbon dioxide to form calcium carbonate, which is sparingly soluble, and so presents a low mobility in most ground. Moreover this product is used as fertilisers.
12.3: Persistence and degradability
Not relevant for inorganic substances.
12.4: Bioaccumulative potential
Not relevant for inorganic substances.
13: Disposal considerations
Disposal should be in accordance with local and national legislation.
14: Transport information
14.1: Transport consideration
14.1.1: Classification Not classified as hazardous for transport.
14.1.2: ADR (Road) Not subject to identification
14.1.3: RID (Rail) Not subject to identification
14.1.4: IMDG / GGVSea (Sea) Not subject to identification
14.1.5:IATA-DGR / ICTAO-TI(Air) Not subject to identification
14.2: Special precaution
Avoid any release of dust during transportation, by using tight tanks.
Hydrated Lime MSDS – Page 7/7
15: Regulatory information
15.1: Labeling according to EEC-directives
15.1.1: Symbol and classification of the substance according to Directive 67/548/EEC
Xi Irritant
15.1.2: Restriction of marketing and employment
None
15.1.3: National regulations Water endangering class 1 (Germany)
16: Other information
16.1: Risk phrases
R37 Irritating to respiratory system
R38 Irritating to skin
R41 Risk of serious damage to eyes
16.2: Safety phrases
S2 Keep out of reach of children
S25 Avoid contact with eyes
S26 In case of contact with eyes, rinse immediately with plenty of water and seek medical advice
S37 Wear suitable gloves
S39 Wear eye/face protection
16.3: Further information
This safety data sheet supplements the technical use instructions without replacing them. The information contained therein is based on the state of our knowledge regarding the product, at the mentioned date. They are provided in good faith. It does not exempt the user from knowing and applying all texts regulating his activity. It will be his sole responsibility to take all necessary precautions when using the product.
16.4: Guidance and references
Data sheet prepared in accordance with:
Annex II of the REACH Regulation (EC) 1907/2006.
References:
1. Council Directive 90/269/EEC
2. Booklet L64 - Safety Signs and Signals. The Health and Safety (Safety Signs and Signals) Regulations 1996 - Guidance on Regulations (HSE) - ISBN 0 7176 0870 0
3. IUCLID Dataset –2000
4. The Merck Index (Ed. Merck & Co, Rahway, USA)
16.5: Revision
The additions or modifications are announced in italic.The present version is a renewed version, in order to be in accordance with the Annex II of the REACH Regulation (EC) 1907/2006. Version November 2008
End of the safety data sheet

Carbon Dioxide

Material Safety Data Sheet

Section 1. Chemical product

Carbon Dioxide 124-38-9 100 **ACGIH TLV (United States, 9/2004).**
STEL: 54000 mg/m3 15 minute(s). Form: All forms
STEL: 30000 ppm 15 minute(s). Form: All forms
TWA: 9000 mg/m 3 8 hour(s). Form: All forms
TWA: 5000 ppm 8 hour(s). Form: All forms
NIOSH REL (United States, 6/2001).
STEL: 54000 mg/m3 15 minute(s). Form: All forms
STEL: 30000 ppm 15 minute(s). Form: All forms
TWA: 9000 mg/m 3 10 hour(s). Form: All forms
TWA: 5000 ppm 10 hour(s). Form: All forms
OSHA PEL (United States, 6/1993).
TWA: 9000 mg/m 3 8 hour(s). Form: All forms
TWA: 5000 ppm 8 hour(s). Form: All forms

Section 2. Composition, Information on Ingredients

Name CAS number % Volume Exposure limits
Inhalation,Dermal,Eyes
Emergency overview

Section 3. Hazards identification

Routes of entry
Potential acute health effects
Moderately irritating to the respiratory system.
Moderately irritating to the eyes.
Ingestion is not a normal route of exposure for gases
Moderately irritating to the skin.

Physical state Gas.
Warning!
CONTENTS UNDER PRESSURE.
CAUSES DAMAGE TO THE FOLLOWING ORGANS: LUNGS, CARDIOVASCULAR SYSTEM, SKIN, EYES, CENTRAL NERVOUS SYSTEM, EYE, LENS OR CORNEA.
MAY CAUSE RESPIRATORY TRACT, EYE AND SKIN IRRITATION.
Avoid contact with skin and clothing. Avoid breathing gas. Do not puncture or incinerate container. Keep container closed. Use only with adequate ventilation. Wash thoroughly after handling.
Contact with rapidly expanding gas, liquid, or solid can cause frostbite.
Build 1.1 ***Page: 1/6***
Carbon Dioxide
See toxicological Information (section 11)
CARCINOGENIC EFFECTS: Not available.
MUTAGENIC EFFECTS: Not available.
TERATOGENIC EFFECTS: Not available.
Medical conditions aggravated by overexposure
Acute or chronic respiratory conditions may be aggravated by overexposure to this gas.
Potential chronic health effects
Do NOT induce vomiting unless directed to do so by medical personnel. Never give anything by mouth to an unconscious person. Get medical attention if symptoms appear. In case of contact, immediately flush eyes with plenty of water for at least 15 minutes. Get medical attention immediately. In case of contact, immediately flush skin with plenty of water. Remove contaminated clothing and shoes. Wash clothing before reuse. Thoroughly clean shoes before reuse.
Get medical attention. If inhaled, remove to fresh air. If not breathing, give artificial respiration. If breathing is difficult, give oxygen. Get medical attention.

Section 4. First aid measures

Eye contact

Skin contact
Inhalation
Ingestion
No action shall be taken involving any personal risk or without suitable training.If fumes are still suspected to be present, the rescuer should wear an appropriate mask or a self-contained breathing apparatus.It may be dangerous to the person providing aid to give mouth-to-mouth resuscitation.
Frostbite : Try to warm up the frozen tissues and seek medical attention.
Non-flammable.
Use an extinguishing agent suitable for surrounding fires.

Section 5. Fire fighting measures

Flammability of the product
Fire fighting media and instructions
If involved in fire, shut off flow immediately if it can be done without risk. Apply water from a safe distance to cool container and protect surrounding area. No specific hazard.
Special protective equipment for fire-fighters
Fire fighters should wear appropriate protective equipment and self-contained breathing apparatus (SCBA) with a full facepiece operated in positive pressure mode. Immediately contact emergency personnel. Keep unnecessary personnel away. Use suitable protective equipment (Section 8). Shut off gas supply if this can be done safely.
Isolate area until gas has dispersed.
Environmental precautions

Section 6. Accidental release measures

: Avoid dispersal of spilled material and runoff and contact with soil, waterways, drains and sewers.
Personal precautions :
Keep container tightly closed. Keep container in a cool, well-ventilated area. Cylinders should be stored upright, with valve protection cap in place, and firmly secured to prevent falling or being knocked over. Cylinder temperatures should not exceed 52 °C (125 °F).
Avoid contact with eyes, skin and clothing. Keep container closed. Use only with adequate ventilation. Do not puncture or incinerate container. Wash thoroughly after handling. High pressure gas. Use equipment rated for cylinder pressure. Close valve after each use and when empty. Protect cylinders from physical damage; do not drag, roll, slide, or drop. Use a suitable hand truck for cylinder movement. Never allow any unprotected part of the body to touch uninsulated pipes or vessels that contain cryogenic liquids. Prevent entrapment of liquid in closed systems or piping without pressure relief devices. Some materials may become brittle at low temperatures and will easily fracture.

Section 7. Handling and storage

Handling
Storage

Carbon Dioxide
Use only with adequate ventilation. Use process enclosures, local exhaust ventilation, or other engineering controls to keep airborne levels below recommended exposure limits.

Section 8. Exposure Controls, Personal Protection

Engineering controls
Use a properly fitted, air-purifying or air-fed respirator complying with an approved standard if a risk assessment indicates this is necessary.Respirator selection must be based on known or anticipated exposure levels, the hazards of the product and the safe working limits of the selected respirator.
Safety eyewear complying with an approved standard should be used when a risk assessment indicates this is necessary to avoid exposure to liquid splashes, mists or dusts.
Personal protective equipment for the body should be selected based on the task being performed and the risks involved and should be approved by a specialist before handling this product.
Personal protection
Eyes
Skin
Respiratory
Consult local authorities for acceptable exposure limits.
Personal protection in case of a large spill

: A self-contained breathing apparatus should be used to avoid inhalation of the product. Chemical-resistant, impervious gloves or gauntlets complying with an approved standard should be worn at all times when handling chemical products if a risk assessment indicates this is necessary.

Hands :

The applicable standards are (US) 29 CFR 1910.134 and (Canada) Z94.4-93
When working with cryogenic liquids, wear a full face shield.
Insulated gloves suitable for low temperatures
-78.55°C (-109.4°F)
Sublimation temperature: -78.5°C (-109.3°F)
1.53 (Air = 1)
830 psig
30.9°C (87.6°F)
44.01 g/mole

Boiling/condensation point

Melting/freezing point

Not available.

Section 9. Physical and chemical properties

Molecular weight

Critical temperature

Vapor pressure

Vapor density

Physical chemical comments

Molecular formula CO_2

Specific Volume (ft^3/lb) : 8.77193

Gas Density (lb/ft^3) : 0.114

The product is stable.

Section 10. Stability and reactivity

Stability and reactivity :

Section 11. Toxicological information

Specific effects

Carcinogenic effects No known significant effects or critical hazards.

Mutagenic effects No known significant effects or critical hazards.

Reproduction toxicity No known significant effects or critical hazards.

No specific information is available in our database regarding the other toxic effects of this material for humans.
Causes damage to the following organs: lungs, cardiovascular system, skin, eyes, central nervous system (CNS), eye, lens or cornea.

Chronic effects on humans

Other toxic effects on humans

Toxicity data

IDLH : 40000 ppm

These products are carbon oxides (CO, CO_2).
The product itself and its products of degradation are not toxic.

Section 12. Ecological information

Toxicity of the products of biodegradation

Products of degradation :

Environmental fate : Not available.

Environmental hazards : No known significant effects or critical hazards.

Toxicity to the environment : Not available.

Section 13. Disposal considerations

Product removed from the cylinder must be disposed of in accordance with appropriate Federal, State, local regulation.Return cylinders with residual product to Airgas, Inc.Do not dispose of locally.

Section 14. Transport information

2.2 **Limited quantity**
Yes.
Packaging instruction
Passenger Aircraft Quantity limitation: 75 kg
Cargo Aircraft Quantity limitation: 150 kg
DOT Classification
TDG Classification 2.2

CARBON DIOXIDE
Carbon dioxide,
refrigerated liquid
UN1013
UN2187
CARBON DIOXIDE
Carbon dioxide,
refrigerated liquid
Regulatory information
UN number Proper shipping name
Class Packing group Label Additional information
UN1013
UN2187
Explosive Limit and Limited Quantity Index 0.125
Passenger Carrying Road or Rail Index 75
Mexico Classification
UN1013
UN2187
CARBON DIOXIDE
Carbon dioxide, refrigerated liquid
Not applicable (gas).

Section 15. Regulatory information

U.S. Federal regulations
Pennsylvania RTK: Carbon Dioxide: (generic environmental hazard)
Massachusetts RTK: Carbon Dioxide
New Jersey: Carbon Dioxide
TSCA 8(b) inventory: Carbon Dioxide
Clean Water Act (CWA) 307: No products were found.
Clean Water Act (CWA) 311: No products were found.
Clean air act (CAA) 112 accidental release prevention: No products were found.
Clean air act (CAA) 112 regulated flammable substances: No products were found.
Clean air act (CAA) 112 regulated toxic substances: No products were found.
State regulations
CEPA DSL: Carbon Dioxide
WHMIS (Canada) Class A: Compressed gas.
SARA 302/304/311/312 extremely hazardous substances: No products were found.
SARA 302/304 emergency planning and notification: No products were found.
SARA 302/304/311/312 hazardous chemicals: Carbon Dioxide
SARA 311/312 MSDS distribution - chemical inventory - hazard identification: Carbon Dioxide: Sudden Release of Pressure, Immediate (Acute) Health Hazard, Delayed (Chronic) Health Hazard
Canada
United States

Section 16. Other information

Reactivity
Personal protection
CONTENTS UNDER PRESSURE.
CAUSES DAMAGE TO THE FOLLOWING ORGANS: LUNGS, CARDIOVASCULAR SYSTEM, SKIN, EYES, CENTRAL NERVOUS SYSTEM, EYE, LENS OR CORNEA.
MAY CAUSE RESPIRATORY TRACT, EYE AND SKIN IRRITATION.

CORTROL OS5607

1 Identification

Identification of substance or preparation
CORTROL OS5607
Product Application Area
Water based dissolved oxygen scavenger/metal passivator.
Company/Undertaking Identification
GE Betz, Inc.
4636 Somerton Road
Trevose, PA 19053
T 215 355-3300, F 215 953 5524
Emergency Telephone
(800) 877-1940
Prepared by Product Stewardship Group: T 215-355-3300 Prepared on: 25-MAY-2011

2 Hazard(s) identification

****
EMERGENCY OVERVIEW
CAUTION
May cause slight irritation to the skin. May cause slight irritation to the eyes. Mists/aerosols may cause irritation to upper respiratory tract.
DOT hazard is not applicable
Odor: Slight; Appearance: Colorless To Light Yellow, Liquid
Fire fighters should wear positive pressure self-contained breathing apparatus(full face-piece type). Proper fire-extinguishing media: dry chemical, carbon dioxide, foam or water
****
POTENTIAL HEALTH EFFECTS
ACUTE SKIN EFFECTS:
Primary route of exposure; May cause slight irritation to the skin.
ACUTE EYE EFFECTS:
May cause slight irritation to the eyes.
ACUTE RESPIRATORY EFFECTS:
Mists/aerosols may cause irritation to upper respiratory tract.
Substance or Preparation: CORTROL OS5607 Page 1
INGESTION EFFECTS:
May cause gastrointestinal irritation.
TARGET ORGANS:
No evidence of potential chronic effects.
MEDICAL CONDITIONS AGGRAVATED:
Not known.
SYMPTOMS OF EXPOSURE:
May cause redness or itching of skin.

3 Composition / information on ingredients

Information for specific product ingredients as required by the U.S. OSHA HAZARD COMMUNICATION STANDARD is listed. Refer to additional sections of this MSDS for our assessment of the potential hazards of this formulation.
HAZARDOUS INGREDIENTS:
Cas# Chemical Name Range(w/w%)
497-18-7 CARBONIC DIHYDRAZIDE 5-10
Exothermic hydrolysis to hydrazine can occur with high temperature; also occurs by contact with mineral acids, oxidizers, or low grade metals;
irritant (skin and eyes)
Aviod contact with low grade metals (LCS, AL, Cu), mineral acids and oxidizers to avoid accelerated actives degradation.
Do not mix with other chemicals. Feed independently to system.

4 First-aid measures

SKIN CONTACT:
Wash thoroughly with soap and water. Remove contaminated clothing. Get medical attention if irritation develops or persists.
EYE CONTACT:
Remove contact lenses. Hold eyelids apart. Immediately flush eyes with plenty of low-pressure water for at least 15 minutes. Get medical attention if irritation persists after flushing.
INHALATION:
If nasal, throat or lung irritation develops - remove to fresh air
and get medical attention.
INGESTION:
Do not feed anything by mouth to an unconscious or convulsive victim. Do not induce vomiting. Immediately contact physician. Dilute contents of stomach using 2-8 fluid ounces (60-240 mL) of
milk or water.
NOTES TO PHYSICIANS:
No special instructions

5 Fire-fighting measures

Substance or Preparation: CORTROL OS5607 Page 2
FIRE FIGHTING INSTRUCTIONS:
Fire fighters should wear positive pressure self-contained breathing
apparatus (full face-piece type).
EXTINGUISHING MEDIA:
dry chemical, carbon dioxide, foam or water
HAZARDOUS DECOMPOSITION PRODUCTS:
oxides of carbon and nitrogen
FLASH POINT:
> 200F > 93C P-M(CC)

6 Accidental release measures

PROTECTION AND SPILL CONTAINMENT:
Ventilate area. Use specified protective equipment. Contain and absorb on absorbent material. Place in waste disposal container. Flush area with water. Wet area may be slippery. Spread sand/grit.
DISPOSAL INSTRUCTIONS:
Water contaminated with this product may be sent to a sanitary sewer treatment facility,in accordance with any local agreement,a permitted waste treatment facility or discharged under a permit. Product as is - Incinerate or land dispose in an approved landfill.

7 Handling and storage

HANDLING:
Contact with oxidizers, peroxide and metal oxide may result in a violent reaction. Contamination with low pH products and low grade metal accelerate decomposition to hydrazine.
STORAGE:
Keep containers closed when not in use. Store in a manner that minimizes potential contamination. Store only in vented containers. Protect from freezing. Shelf life 180 days.

8 Exposure controls / personal protection

EXPOSURE LIMITS
CHEMICAL NAME
CARBONIC DIHYDRAZIDE
PEL (OSHA): LIMITS HAVE NOT BEEN ESTABLISHED BY US OSHA.
TLV (ACGIH): LIMITS HAVE NOT BEEN ESTABLISHED BY ACGIH.
ENGINEERING CONTROLS:
adequate ventilation
PERSONAL PROTECTIVE EQUIPMENT:
Use protective equipment in accordance with 29CFR 1910 Subpart I
RESPIRATORY PROTECTION:
A RESPIRATORY PROTECTION PROGRAM THAT MEETS OSHA'S 29 CFR
1910.134 AND ANSI Z88.2 REQUIREMENTS MUST BE FOLLOWED WHENEVER
WORKPLACE CONDITIONS WARRANT A RESPIRATOR'S USE.
USE AIR PURIFYING RESPIRATORS WITHIN USE LIMITATIONS ASSOCIATED
WITH THE EQUIPMENT OR ELSE USE SUPPLIED AIR-RESPIRATORS.
If air-purifying respirator use is appropriate, use a
respirator with ammonia/methylamine cartridges.
SKIN PROTECTION:
rubber, viton or neoprene gloves -- Wash off after each use.
Substance or Preparation: CORTROL OS5607 Page 3

Replace as necessary.
EYE PROTECTION:
splash proof chemical goggles

9 Physical and chemical properties

Spec. Grav.(70F,21C) 1.021 Vapor Pressure (mmHG) ~ 18.0
Freeze Point (F) 32 Vapor Density (air=1) < 1.00
Freeze Point (C) 0
Viscosity(cps 70F,21C) 9 % Solubility (water) 100.0
Odor Slight
Appearance Colorless To Light Yellow
Physical State Liquid
Flash Point P-M(CC) > 200F > 93C
pH As Is (approx.) 8.0
Evaporation Rate (Ether=1) < 1.00
Percent VOC: 0.0
NA = not applicable ND = not determined

10 Stability and reactivity

CHEMICAL STABILITY:
Stable under normal storage conditions.
POSSIBILITY OF HAZARDOUS REACTIONS:
Contact with water reactive compounds may cause fire or explosion.
INCOMPATIBILITIES:
May react with strong oxidizers.
DECOMPOSITION PRODUCTS:
oxides of carbon and nitrogen

11 Toxicological information

Oral LD50 RAT: >2,000 mg/kg
NOTE - Value is for testing of similar material.
Dermal LD50 RABBIT: >2,000 mg/kg
NOTE - Value is for testing of similar material.
Skin Irritation Score RABBIT: 0.23
NOTE - Value is for testing of similar material.
Eye Irritation Score RABBIT: 0.33
NOTE - Value is for testing of similar material.

12 Ecological information

Substance or Preparation: CORTROL OS5607 Page 4
AQUATIC TOXICOLOGY
Ceriodaphnia 48 Hour Static Renewal Bioassay
LC50= 160; 10% Mortality= 96 mg/L
Daphnia magna 48 Hour Static Renewal Bioassay
LC50= 850; No Effect Level= 190 mg/L
Fathead Minnow 96 Hour Static Renewal Bioassay
LC50= 260; 5% Mortality= 96 mg/L
BIODEGRADATION
No Data Available.

13 Disposal considerations

If this undiluted product is discarded as a waste, the US RCRA hazardous waste identification number is :
Not applicable.
Please be advised; however, that state and local requirements for waste disposal may be more restrictive or otherwise different from federal regulations. Consult state and local regulations regarding the proper disposal of this material.

14 Transport information

Transportation Hazard: Not Applicable
DOT: Not Regulated
DOT EMERGENCY RESPONSE GUIDE #: Not applicable
Note: Some containers may be DOT exempt, please check BOL for exact container classification
IATA: Not Regulated
IMDG: Not Regulated

15 Regulatory information

TSCA:
All components of this product are included on or are in compliance with the U.S. TSCA regulations.
CERCLA AND/OR SARA REPORTABLE QUANTITY (RQ):
No regulated constituent present at OSHA thresholds
NSF Registered and/or meets USDA (according to 1998 Guidelines):
Registration number: Not Registered
SARA SECTION 312 HAZARD CLASS:
Immediate(acute)
SARA SECTION 302 CHEMICALS:
No regulated constituent present at OSHA thresholds
SARA SECTION 313 CHEMICALS:
No regulated constituent present at OSHA thresholds
CALIFORNIA REGULATORY INFORMATION
CALIFORNIA SAFE DRINKING WATER AND TOXIC ENFORCEMENT ACT (PROPOSITION 65):
This product contains one or more ingredients at trace levels known to the state of California to cause cancer and reproductive toxicity.
Substance or Preparation: CORTROL OS5607 Page 5
MICHIGAN REGULATORY INFORMATION
No regulated constituent present at OSHA thresholds

16 Other information

HMIS vII CODE TRANSLATION
Health 1 Slight Hazard
Fire 1 Slight Hazard
Reactivity 0 Minimal Hazard
Special NONE No special Hazard
(1) Protective Equipment B Goggles,Gloves
(1) refer to section 8 of MSDS for additional protective equipment recommendations.

FLOGARD MS6209

1 Identification

Identification of substance or preparation
FLOGARD MS6209
Product Application Area
Water-based corrosion inhibitor.
Company/Undertaking Identification
GE Betz, Inc.
4636 Somerton Road
Trevose, PA 19053
T 215 355-3300, F 215 953 5524
Emergency Telephone
(800) 877-1940
Prepared by Product Stewardship Group: T 215-355-3300 Prepared on: 03-OCT-2011

2 Hazard(s) identification

****
EMERGENCY OVERVIEW
DANGER
Corrosive to skin. Corrosive to the eyes. Mists/aerosols cause irritation to the upper respiratory tract.
DOT hazard: Corrosive to skin/steel
Odor: Slight; Appearance: Colorless To Yellow, Liquid
Fire fighters should wear positive pressure self-contained breathing apparatus(full face-piece type). Proper fire-extinguishing media: dry chemical/CO2/foam or water--slippery condition; use sand/grit.
****
POTENTIAL HEALTH EFFECTS
ACUTE SKIN EFFECTS:
Primary route of exposure; Corrosive to skin.
ACUTE EYE EFFECTS:
Corrosive to the eyes.
ACUTE RESPIRATORY EFFECTS:
Mists/aerosols cause irritation to the upper respiratory tract.
INGESTION EFFECTS:
Substance or Preparation: FLOGARD MS6209 Page 1
May cause severe irritation or burning of mouth, throat, and gastrointestinal tract with severe chest and abdominal pain, nausea, vomiting, diarrhea, lethargy and collapse. Possible death when ingested in very large doses.
TARGET ORGANS:
Prolonged or repeated exposures may cause tissue necrosis.
MEDICAL CONDITIONS AGGRAVATED:
Not known.
SYMPTOMS OF EXPOSURE:
Causes severe irritation, burns or tissue ulceration with subsequent scarring.

3 Composition / information on ingredients

Information for specific product ingredients as required by the U.S. OSHA HAZARD COMMUNICATION STANDARD is listed. Refer to additional sections of this MSDS for our assessment of the potential hazards of this formulation.
HAZARDOUS INGREDIENTS:
Cas# Chemical Name Range(w/w%)
13598-37-3 PHOSPHORIC ACID, ZINC SALT (2:1) 40-70
Irritant
7664-38-2 PHOSPHORIC ACID 15-40
Corrosive

4 First-aid measures

SKIN CONTACT:
URGENT! Wash thoroughly with soap and water. Remove contaminated clothing. Get immediate medical attention. Thoroughly wash clothing

before reuse.
EYE CONTACT:
URGENT! Immediately flush eyes with plenty of low-pressure water for at least 20 minutes while removing contact lenses. Hold eyelids apart. Get immediate medical attention.
INHALATION:
Remove to fresh air. If breathing is difficult, give oxygen. If breathing has stopped, give artificial respiration. Get immediate medical attention.
INGESTION:
Do not feed anything by mouth to an unconscious or convulsive victim. Do not induce vomiting. Immediately contact physician. Rinse mouth with plenty of water. Dilute contents of stomach using 4-10 fluid ounces (120-300 mL) of milk or water.
NOTES TO PHYSICIANS:
Material is corrosive. It may not be advisable to induce vomiting. Possible mucosal damage may contraindicate the use of gastric lavage.
Substance or Preparation: FLOGARD MS6209 Page 2

5 Fire-fighting measures

FIRE FIGHTING INSTRUCTIONS:
Fire fighters should wear positive pressure self-contained breathing apparatus (full face-piece type).
EXTINGUISHING MEDIA:
dry chemical/CO2/foam or water--slippery condition; use sand/grit.
HAZARDOUS DECOMPOSITION PRODUCTS:
oxides of phosphorus
FLASH POINT:
> 200F > 93C P-M(CC)
MISCELLANEOUS:
Corrosive to skin/steel
UN 1805;Emergency Response Guide #154

6 Accidental release measures

PROTECTION AND SPILL CONTAINMENT:
Ventilate area. Use specified protective equipment. Contain and absorb on absorbent material. Place in waste disposal container. Flush area with water. Wet area may be slippery. Spread sand/grit.
DISPOSAL INSTRUCTIONS:
Water contaminated with this product may be sent to a sanitary sewer treatment facility,in accordance with any local agreement,a permitted waste treatment facility or discharged under a permit. Product as is - Incinerate or land dispose in an approved landfill.

7 Handling and storage

HANDLING:
Acidic. Corrosive(Skin/eyes). Do not mix with alkaline material.
STORAGE:
Keep containers closed when not in use. Preferably stored between 40-100F (5-38C).

8 Exposure controls / personal protection

EXPOSURE LIMITS
CHEMICAL NAME
PHOSPHORIC ACID, ZINC SALT (2:1)
PEL (OSHA): LIMITS HAVE NOT BEEN ESTABLISHED BY US OSHA.
TLV (ACGIH): LIMITS HAVE NOT BEEN ESTABLISHED BY ACGIH.
PHOSPHORIC ACID
PEL (OSHA): 1 MG/M3
TLV (ACGIH): TWA = 1 MG/M3; STEL = 3 MG/M3
MISC: NIOSH REL = 1 MG/M3; NIOSH STEL = 3 MG/M3; NIOSH IDLH = 1000 MG/M3
ENGINEERING CONTROLS:
Adequate ventilation to maintain air contaminants below exposure limits.
PERSONAL PROTECTIVE EQUIPMENT:

Use protective equipment in accordance with 29CFR 1910 Subpart I
Substance or Preparation: FLOGARD MS6209 Page 3
RESPIRATORY PROTECTION:
A RESPIRATORY PROTECTION PROGRAM THAT MEETS OSHA'S 29 CFR 1910.134 AND ANSI Z88.2 REQUIREMENTS MUST BE FOLLOWED WHENEVER WORKPLACE CONDITIONS WARRANT A RESPIRATOR'S USE. USE AIR PURIFYING RESPIRATORS WITHIN USE LIMITATIONS ASSOCIATED WITH THE EQUIPMENT OR ELSE USE SUPPLIED AIR-RESPIRATORS.
If air-purifying respirator use is appropriate, use any ofthe following particulate respirators: N95, N99, N100, R95,R99, R100, P95, P99 or P100.
SKIN PROTECTION:
gauntlet-type rubber, butyl or neoprene gloves, chemical resistant apron -- Wash off after each use. Replace as necessary.
EYE PROTECTION:
splash proof chemical goggles, face shield

9 Physical and chemical properties

Spec. Grav.(70F,21C) 1.711 Vapor Pressure (mmHG) ~ 15.0
Freeze Point (F) < -30 Vapor Density (air=1) < 1.00
Freeze Point (C) < -34
Viscosity(cps 70F,21C) 70 % Solubility (water) 100.0
Odor Slight
Appearance Colorless To Yellow
Physical State Liquid
Flash Point P-M(CC) > 200F > 93C
pH As Is (approx.) < 1.0
Evaporation Rate (Ether=1) < 1.00
Percent VOC: 0.0
NA = not applicable ND = not determined

10 Stability and reactivity

CHEMICAL STABILITY:
Stable under normal storage conditions.
POSSIBILITY OF HAZARDOUS REACTIONS:
Contact with strong bases may cause a violent reaction releasing heat.
INCOMPATIBILITIES:
May react with bases or strong oxidizers.
DECOMPOSITION PRODUCTS:
oxides of phosphorus

11 Toxicological information

Oral LD50 RAT: 2830 mg/kg
NOTE - Calculated value according to GHS additivity formula
Dermal LD50 RABBIT: 3890 mg/kg
NOTE - Calculated value according to GHS additivity formula
Skin Irritation Score RABBIT: CORROSIVE
NOTE - EPA Category I
Eye Irritation Score RABBIT: CORROSIVE
NOTE - Estimated value
Substance or Preparation: FLOGARD MS6209 Page 4

12 Ecological information

AQUATIC TOXICOLOGY
Ceriodaphnia 48 Hour Static Renewal Bioassay
LC50= 1.5; No Effect Level= .63 mg/L
Ceriodaphnia 7 Day Static Renewal Bioassay
IC25 = 1.9 mg/L
Daphnia magna 48 Hour Static Renewal Bioassay
LC50= 12; No Effect Level= 1.5 mg/L
Fathead Minnow 7 Day Static Renewal Bioassay
IC25 = 5 mg/L
Fathead Minnow 96 Hour Static Renewal Bioassay
LC50= 14; No Effect Level= 2.5 mg/L
Rainbow Trout 96 Hour Static Renewal Bioassay
LC50= 4.9; No Effect Level= 1.6 mg/L
BIODEGRADATION
Product contains only inorganics that are not subject to typical biological degradation. Assimilation by microbes may occur in

waste treatment or the environment.

13 Disposal considerations

If this undiluted product is discarded as a waste, the US RCRA hazardous waste identification number is :
D002=Corrosive (pH,steel); D006=Cadmium; D008=Lead.
Please be advised; however, that state and local requirements for waste disposal may be more restrictive or otherwise different from federal regulations. Consult state and local regulations regarding the proper disposal of this material.

14 Transport information

Transportation Hazard: Corrosive to skin/steel
DOT: PHOSPHORIC ACID SOLUTION
8, UN 1805, PG III, RQ
DOT EMERGENCY RESPONSE GUIDE #: 154
Note: Some containers may be DOT exempt, please check BOL for exact container classification
IATA: PHOSPHORIC ACID SOLUTION
8, UN 1805, PG III
IMDG: PHOSPHORIC ACID SOLUTION
8, UN 1805, PG III

15 Regulatory information

TSCA:
All components of this product are included on or are in compliance with the U.S. TSCA regulations.
CERCLA AND/OR SARA REPORTABLE QUANTITY (RQ):
1,962 gallons due to PHOSPHORIC ACID;
FOOD AND DRUG ADMINISTRATION:
Substance or Preparation: FLOGARD MS6209 Page 5
21 CFR 176.170 (components of paper and paperboard in contact with aqueous and fatty foods)
NSF Registered and/or meets USDA (according to 1998 Guidelines):
Registration number: 140901
Category Code(s):
SARA SECTION 312 HAZARD CLASS:
Immediate(acute);Delayed(Chronic)
SARA SECTION 302 CHEMICALS:
No regulated constituent present at OSHA thresholds
SARA SECTION 313 CHEMICALS:
CAS# CHEMICAL NAME RANGE
13598-37-3 PHOSPHORIC ACID, ZINC SALT (2:1) 41.0-50.0%
CALIFORNIA REGULATORY INFORMATION
CALIFORNIA SAFE DRINKING WATER AND TOXIC ENFORCEMENT ACT (PROPOSITION 65):
This product contains one or more ingredients at trace levels known to the state of California to cause cancer and reproductive toxicity.
MICHIGAN REGULATORY INFORMATION
No regulated constituent present at OSHA thresholds

16 Other information

HMIS vII CODE TRANSLATION
Health 3 Serious Hazard
Fire 0 Minimal Hazard
Reactivity 0 Minimal Hazard
Special CORR DOT corrosive
(1) Protective Equipment D Goggles,Face Shield,Gloves,Apron
(1) refer to section 8 of MSDS for additional protective equipment recommendations.

1 Identification

Identification of substance or preparation
GENGARD GN8004
Product Application Area

Corrosion inhibitor

Company/Undertaking Identification

GE Betz, Inc.
4636 Somerton Road
Trevose, PA 19053
T 215 355-3300, F 215 953 5524

Emergency Telephone

(800) 877-1940

Prepared by Product Stewardship Group: T 215-355-3300 Prepared on: 30-MAR-2012

2 Hazard(s) identification

****

EMERGENCY OVERVIEW

CAUTION

May cause slight irritation to the skin. May cause slight irritation to the eyes. Not expected to cause respiratory tract irritation.
DOT hazard is not applicable
Odor: Mild; Appearance: Amber, Liquid
Fire fighters should wear positive pressure self-contained breathing apparatus(full face-piece type). Proper fire-extinguishing media: dry chemical, carbon dioxide, foam or water

****

POTENTIAL HEALTH EFFECTS

ACUTE SKIN EFFECTS:

Primary route of exposure; May cause slight irritation to the skin.

ACUTE EYE EFFECTS:

May cause slight irritation to the eyes.

ACUTE RESPIRATORY EFFECTS:

Not expected to cause respiratory tract irritation.
Substance or Preparation: GENGARD GN8004 Page 1

INGESTION EFFECTS:

May cause gastrointestinal irritation with possible nausea, vomiting, abdominal discomfort and diarrhea.

TARGET ORGANS:

Repeated skin contact may cause sensitization.

MEDICAL CONDITIONS AGGRAVATED:

Not known.

SYMPTOMS OF EXPOSURE:

May cause redness or itching of skin.

3 Composition / information on ingredients

Information for specific product ingredients as required by the U.S. OSHA HAZARD COMMUNICATION STANDARD is listed. Refer to additional sections of this MSDS for our assessment of the potential hazards of this formulation.

HAZARDOUS INGREDIENTS:

This product is not hazardous as defined by OSHA regulations.
No component is considered to be a carcinogen by the National Toxicology Program, the International Agency for Research on Cancer, or the Occupational Safety and Health Administration at OSHA thresholds for carcinogens.

4 First-aid measures

SKIN CONTACT:

Wash thoroughly with soap and water. Remove contaminated clothing. Get medical attention if irritation develops or persists.

EYE CONTACT:

Remove contact lenses. Hold eyelids apart. Immediately flush eyes with plenty of low-pressure water for at least 15 minutes. Get medical attention if irritation persists after flushing.

INHALATION:

If nasal, throat or lung irritation develops - remove to fresh air and get medical attention.

INGESTION:

Do not feed anything by mouth to an unconscious or convulsive victim. Do not induce vomiting. Immediately contact physician. Dilute contents of stomach using 2-8 fluid ounces (60-240 mL) of milk or water.

NOTES TO PHYSICIANS:
No special instructions

5 Fire-fighting measures

Substance or Preparation: GENGARD GN8004 Page 2

FIRE FIGHTING INSTRUCTIONS:
Fire fighters should wear positive pressure self-contained breathing apparatus (full face-piece type).

EXTINGUISHING MEDIA:
dry chemical, carbon dioxide, foam or water

HAZARDOUS DECOMPOSITION PRODUCTS:
oxides of carbon

FLASH POINT:
> 213F > 101C P-M(CC)

6 Accidental release measures

PROTECTION AND SPILL CONTAINMENT:
Ventilate area. Use specified protective equipment. Contain and absorb on absorbent material. Place in waste disposal container. Flush area with water. Wet area may be slippery. Spread sand/grit.

DISPOSAL INSTRUCTIONS:
Water contaminated with this product may be sent to a sanitary sewer treatment facility,in accordance with any local agreement,a permitted waste treatment facility or discharged under a permit. Product as is - Incinerate or land dispose in an approved landfill.

7 Handling and storage

HANDLING:
Normal chemical handling.

STORAGE:
Keep containers closed when not in use. Store in cool ventilated location. Store away from oxidizers. Shelf life 360 days.

8 Exposure controls / personal protection

EXPOSURE LIMITS
This product is not hazardous as defined by OSHA regulations.

ENGINEERING CONTROLS:
adequate ventilation

PERSONAL PROTECTIVE EQUIPMENT:
Use protective equipment in accordance with 29CFR 1910 Subpart I

RESPIRATORY PROTECTION:
A RESPIRATORY PROTECTION PROGRAM THAT MEETS OSHA'S 29 CFR 1910.134 AND ANSI Z88.2 REQUIREMENTS MUST BE FOLLOWED WHENEVER WORKPLACE CONDITIONS WARRANT A RESPIRATOR'S USE.
USE AIR PURIFYING RESPIRATORS WITHIN USE LIMITATIONS ASSOCIATED WITH THE EQUIPMENT OR ELSE USE SUPPLIED AIR-RESPIRATORS.
If air-purifying respirator use is appropriate, use any of the following particulate respirators: N95, N99, N100, R95, R99, R100, P95, P99 or P100.

SKIN PROTECTION:
rubber, butyl, viton or neoprene gloves -- Wash off after each use. Replace as necessary.

EYE PROTECTION:
splash proof chemical goggles
Substance or Preparation: GENGARD GN8004 Page 3

9 Physical and chemical properties

Spec. Grav.(70F,21C) 1.134 Vapor Pressure (mmHG) ~ 18.0
Freeze Point (F) 25 Vapor Density (air=1) < 1.00
Freeze Point (C) -4
Viscosity(cps 70F,21C) 44 % Solubility (water) 100.0
Odor Mild
Appearance Amber

Physical State Liquid
Flash Point P-M(CC) > 213F > 101C
pH As Is (approx.) 5.0
Evaporation Rate (Ether=1) < 1.00
Percent VOC: 0.0
NA = not applicable ND = not determined

10 Stability and reactivity

CHEMICAL STABILITY:
Stable under normal storage conditions.
POSSIBILITY OF HAZARDOUS REACTIONS:
Contact with water reactive compounds may cause fire or explosion.
INCOMPATIBILITIES:
May react with strong oxidizers.
DECOMPOSITION PRODUCTS:
oxides of carbon

11 Toxicological information

Oral LD50 RAT: >5000 mg/kg
NOTE - Calculated value according to GHS additivity formula
Dermal LD50 RABBIT: >5000 mg/kg
NOTE - Calculated value according to GHS additivity formula

12 Ecological information

AQUATIC TOXICOLOGY
Ceriodaphnia 48 Hour Static Acute Bioassay
LC50= 1707.6; No Effect Level= 1250 mg/L
Daphnia magna 48 Hour Static Acute Bioassay
LC50= 3677; No Effect Level= 2500 mg/L
Fathead Minnow 96 Hour Static Acute Bioassay
LC50= 2367; No Effect Level= 1250 mg/L
Rainbow Trout 96 Hour Static Acute Bioassay
LC50= 1894; No Effect Level= 1250 mg/L
BIODEGRADATION
BOD-28 (mg/g): 24
BOD-5 (mg/g): 0
COD (mg/g): 385
TOC (mg/g): 109

13 Disposal considerations

Substance or Preparation: GENGARD GN8004 Page 4
If this undiluted product is discarded as a waste, the US RCRA hazardous waste identification number is :
Not applicable.
Please be advised; however, that state and local requirements for waste disposal may be more restrictive or otherwise different from federal regulations. Consult state and local regulations regarding the proper disposal of this material.

14 Transport information

Transportation Hazard: Not Applicable
DOT: Not Regulated
DOT EMERGENCY RESPONSE GUIDE #: Not applicable
Note: Some containers may be DOT exempt, please check BOL for exact container classification
IATA: Not Regulated
IMDG: Not Regulated

15 Regulatory information

TSCA:
All components of this product are included on or are in compliance with the U.S. TSCA regulations.
CERCLA AND/OR SARA REPORTABLE QUANTITY (RQ):
No regulated constituent present at OSHA thresholds
NSF Registered and/or meets USDA (according to 1998 Guidelines):
Registration number: Not Registered
SARA SECTION 312 HAZARD CLASS:
Delayed(Chronic)

SARA SECTION 302 CHEMICALS:
No regulated constituent present at OSHA thresholds
SARA SECTION 313 CHEMICALS:
No regulated constituent present at OSHA thresholds
CALIFORNIA REGULATORY INFORMATION
CALIFORNIA SAFE DRINKING WATER AND TOXIC ENFORCEMENT ACT (PROPOSITION 65):
This product contains one or more ingredients at trace levels known to the state of California to cause cancer.
MICHIGAN REGULATORY INFORMATION
No regulated constituent present at OSHA thresholds

16 Other information

HMIS vII CODE TRANSLATION
Health 1 Slight Hazard
Fire 1 Slight Hazard
Reactivity 0 Minimal Hazard
Special NONE No special Hazard
(1) Protective Equipment B Goggles,Gloves
Substance or Preparation: GENGARD GN8004 Page 5
(1) refer to section 8 of MSDS for additional protective equipment recommendations.

OPTISPERSE HP3100

1 Identification

Identification of substance or preparation
OPTISPERSE HP3100
Product Application Area
Water based internal boiler treatment chemical.
Company/Undertaking Identification
GE Betz, Inc.
4636 Somerton Road
Trevose, PA 19053
T 215 355-3300, F 215 953 5524
Emergency Telephone
(800) 877-1940
Prepared by Product Stewardship Group: T 215-355-3300 Prepared on: 03-FEB-2012

2 Hazard(s) identification

****
EMERGENCY OVERVIEW
DANGER
Corrosive to skin. Corrosive to the eyes. Mists/aerosols may cause irritation to upper respiratory tract.
DOT hazard: Corrosive to skin
Odor: None; Appearance: Colorless To Light Yellow, Liquid
Fire fighters should wear positive pressure self-contained breathing apparatus(full face-piece type). Proper fire-extinguishing media: dry chemical, carbon dioxide, foam or water
****
POTENTIAL HEALTH EFFECTS
ACUTE SKIN EFFECTS:
Primary route of exposure; Corrosive to skin.
ACUTE EYE EFFECTS:
Corrosive to the eyes.
ACUTE RESPIRATORY EFFECTS:
Mists/aerosols may cause irritation to upper respiratory tract.
INGESTION EFFECTS:
Substance or Preparation: OPTISPERSE HP3100 Page 1
May cause gastrointestinal irritation.
TARGET ORGANS:
No evidence of potential chronic effects.
MEDICAL CONDITIONS AGGRAVATED:
Not known.
SYMPTOMS OF EXPOSURE:
May cause redness or itching of skin, irritation, and/or tearing of eyes (direct contact).

3 Composition / information on ingredients

Information for specific product ingredients as required by the U.S. OSHA HAZARD COMMUNICATION STANDARD is listed. Refer to additional sections of this MSDS for our assessment of the potential hazards of this formulation.
HAZARDOUS INGREDIENTS:
Cas# Chemical Name Range(w/w%)
1310-73-2 SODIUM HYDROXIDE 3-7
Corrosive; toxic (by ingestion)

4 First-aid measures

SKIN CONTACT:
URGENT! Wash thoroughly with soap and water. Remove contaminated clothing. Get immediate medical attention. Thoroughly wash clothing before reuse.
EYE CONTACT:
URGENT! Immediately flush eyes with plenty of low-pressure water for at least 20 minutes while removing contact lenses. Hold eyelids apart. Get immediate medical attention.

INHALATION:
If nasal, throat or lung irritation develops - remove to fresh air and get medical attention.
INGESTION:
Do not feed anything by mouth to an unconscious or convulsive victim. Do not induce vomiting. Immediately contact physician. Dilute contents of stomach using 2-8 fluid ounces (60-240 mL) of milk or water.
NOTES TO PHYSICIANS:
No special instructions

5 Fire-fighting measures

FIRE FIGHTING INSTRUCTIONS:
Fire fighters should wear positive pressure self-contained breathing apparatus (full face-piece type).
EXTINGUISHING MEDIA:
dry chemical, carbon dioxide, foam or water
HAZARDOUS DECOMPOSITION PRODUCTS:
oxides of phosphorus
Substance or Preparation: OPTISPERSE HP3100 Page 2
FLASH POINT:
> 200F > 93C P-M(CC)
MISCELLANEOUS:
Corrosive to skin
UN 3266;Emergency Response Guide #154

6 Accidental release measures

PROTECTION AND SPILL CONTAINMENT:
Ventilate area. Use specified protective equipment. Contain and absorb on absorbent material. Place in waste disposal container. Flush area with water. Wet area may be slippery. Spread sand/grit.
DISPOSAL INSTRUCTIONS:
Water contaminated with this product may be sent to a sanitary sewer treatment facility,in accordance with any local agreement,a permitted waste treatment facility or discharged under a permit. Product as is - Incinerate or land dispose in an approved landfill.

7 Handling and storage

HANDLING:
Alkaline. Corrosive(Eyes). Do not mix with acidic material.
STORAGE:
Shelf life = 180 days. Keep containers closed when not in use. Protect from freezing. If frozen, thaw and mix completely prior to use. Store below 100F (38C).

8 Exposure controls / personal protection

EXPOSURE LIMITS
CHEMICAL NAME
SODIUM HYDROXIDE
PEL (OSHA): 2 MG/M3
TLV (ACGIH): TWA (Ceiling) = 2 MG/M3
ENGINEERING CONTROLS:
Adequate ventilation to maintain air contaminants below exposure limits.
PERSONAL PROTECTIVE EQUIPMENT:
Use protective equipment in accordance with 29CFR 1910 Subpart I
RESPIRATORY PROTECTION:
A RESPIRATORY PROTECTION PROGRAM THAT MEETS OSHA'S 29 CFR 1910.134 AND ANSI Z88.2 REQUIREMENTS MUST BE FOLLOWED WHENEVER WORKPLACE CONDITIONS WARRANT A RESPIRATOR'S USE.
USE AIR PURIFYING RESPIRATORS WITHIN USE LIMITATIONS ASSOCIATED WITH THE EQUIPMENT OR ELSE USE SUPPLIED AIR-RESPIRATORS.
If air-purifying respirator use is appropriate, use any of the following particulate respirators: N95, N99, N100, R95, R99, R100, P95, P99 or P100.
SKIN PROTECTION:
gauntlet-type rubber, butyl or neoprene gloves, chemical

resistant apron -- Wash off after each use. Replace as necessary.

EYE PROTECTION:

splash proof chemical goggles, face shield

Substance or Preparation: OPTISPERSE HP3100 Page 3

9 Physical and chemical properties

Spec. Grav.(70F,21C) 1.113 Vapor Pressure (mmHG) ~ 18.0
Freeze Point (F) 21 Vapor Density (air=1) < 1.00
Freeze Point (C) -6
Viscosity(cps 70F,21C) 12 % Solubility (water) 100.0
Odor None
Appearance Colorless To Light Yellow
Physical State Liquid
Flash Point P-M(CC) > 200F > 93C
pH As Is (approx.) > 13.0
Evaporation Rate (Ether=1) < 1.00
Percent VOC: 0.0

NA = not applicable ND = not determined

10 Stability and reactivity

CHEMICAL STABILITY:

Stable under normal storage conditions.

POSSIBILITY OF HAZARDOUS REACTIONS:

Contact with strong acids may cause a violent reaction releasing heat.

INCOMPATIBILITIES:

May react with acids or strong oxidizers.

DECOMPOSITION PRODUCTS:

oxides of phosphorus

11 Toxicological information

Oral LD50 RAT: 2800 mg/kg
NOTE - Calculated value according to GHS additivity formula
Dermal LD50 RABBIT: >5000 mg/kg
NOTE - Calculated value according to GHS additivity formula

12 Ecological information

AQUATIC TOXICOLOGY

Daphnia magna 48 Hour Static Renewal Bioassay (pH adjusted)
LC50= 3300; No Effect Level= 1250 mg/L
Fathead Minnow 96 Hour Static Renewal Bioassay (pH adjusted)
LC50= 5020; No Effect Level= 2750 mg/L

BIODEGRADATION

Product contains only inorganics that are not subject to typical biological degradation. Assimilation by microbes may occur in waste treatment or the environment.

13 Disposal considerations

Substance or Preparation: OPTISPERSE HP3100 Page 4

If this undiluted product is discarded as a waste, the US RCRA hazardous waste identification number is :
D002=Corrosive(pH).
Please be advised; however, that state and local requirements for waste disposal may be more restrictive or otherwise different from federal regulations. Consult state and local regulations regarding the proper disposal of this material.

14 Transport information

Transportation Hazard: Corrosive to skin
DOT: CORROSIVE LIQUID, BASIC, INORGANIC, N.O.S.(SODIUM HYDROXIDE SOLUTION) 8, UN3266, PG III, RQ DOT EMERGENCY RESPONSE GUIDE #: 154
Note: Some containers may be DOT exempt, please check BOL for exact container classification IATA: CORROSIVE LIQUID, BASIC, INORGANIC, N.O.S.(SODIUM HYDROXIDE SOLUTION) 8, UN3266, PG III
IMDG: CORROSIVE LIQUID, BASIC, INORGANIC, N.O.S.(SODIUM HYDROXIDE SOLUTION)8, UN3266, PG III

15 Regulatory information

TSCA:
All components of this product are included on or are in compliance with the U.S. TSCA regulations.
CERCLA AND/OR SARA REPORTABLE QUANTITY (RQ):
2,158 gallons due to SODIUM HYDROXIDE;
FOOD AND DRUG ADMINISTRATION:
ALL ingredients in this product are authorized in 21CFR173.310 for use as boiler water additives where the steam may contact food.
NSF Registered and/or meets USDA (according to 1998 Guidelines):
Registration number: Not Registered
This product is composed of ingredients previously approved by USDA to meet the G6 classification and may be used in boilers or steamlines where the steam produced may contact edible products.
SARA SECTION 312 HAZARD CLASS:
Immediate(acute)
SARA SECTION 302 CHEMICALS:
No regulated constituent present at OSHA thresholds
SARA SECTION 313 CHEMICALS:
No regulated constituent present at OSHA thresholds
CALIFORNIA REGULATORY INFORMATION
CALIFORNIA SAFE DRINKING WATER AND TOXIC ENFORCEMENT ACT (PROPOSITION 65):
No regulated constituents present
MICHIGAN REGULATORY INFORMATION
No regulated constituent present at OSHA thresholds
Substance or Preparation: OPTISPERSE HP3100 Page 5
16 Other information
Fire 0 Minimal Hazard
Reactivity 0 Minimal Hazard
Special CORR DOT corrosive
(1)
HMIS vII CODE TRANSLATION
Health 3 Serious Hazard
Protective Equipment D Goggles,Face Shield,Gloves,Apron
(1) refer to section 8 of MSDS for additional protective equipment recommendations.

SPECTRUS BD1500

1 Identification

Identification of substance or preparation
SPECTRUS BD1500
Product Application Area
Water-based deposit control agent.
Company/Undertaking Identification
GE Betz, Inc.
4636 Somerton Road
Trevose, PA 19053
T 215 355-3300, F 215 953 5524
Emergency Telephone
(800) 877-1940
Prepared by Product Stewardship Group: T 215-355-3300 Prepared on: 27-MAY-2011

2 Hazard(s) identification

****
EMERGENCY OVERVIEW
CAUTION
May cause slight irritation to the skin. May cause moderate irritation to the eyes. Mists/aerosols may cause irritation to upper respiratory tract.
DOT hazard is not applicable
Odor: Slight; Appearance: Colorless, Liquid
Fire fighters should wear positive pressure self-contained breathing apparatus(full face-piece type). Proper fire-extinguishing media: dry chemical, carbon dioxide, foam or water
****
POTENTIAL HEALTH EFFECTS
ACUTE SKIN EFFECTS:
Primary route of exposure; May cause slight irritation to the skin.
ACUTE EYE EFFECTS:
May cause moderate irritation to the eyes.
ACUTE RESPIRATORY EFFECTS:
Mists/aerosols may cause irritation to upper respiratory tract.
Substance or Preparation: SPECTRUS BD1500 Page 1
INGESTION EFFECTS:
May cause slight gastrointestinal irritation.
TARGET ORGANS:
No evidence of potential chronic effects.
MEDICAL CONDITIONS AGGRAVATED:
Not known.
SYMPTOMS OF EXPOSURE:
May cause redness or itching of skin.

3 Composition / information on ingredients

Information for specific product ingredients as required by the U.S. OSHA HAZARD COMMUNICATION STANDARD is listed. Refer to additional sections of this MSDS for our assessment of the potential hazards of this formulation.
HAZARDOUS INGREDIENTS:
This product is not hazardous as defined by OSHA regulations.
No component is considered to be a carcinogen by the National Toxicology Program, the International Agency for Research on Cancer, or the Occupational Safety and Health Administration at OSHA thresholds for carcinogens.

4 First-aid measures

SKIN CONTACT:
Wash thoroughly with soap and water. Remove contaminated clothing. Get medical attention if irritation develops or persists.
EYE CONTACT:
Remove contact lenses. Hold eyelids apart. Immediately flush eyes with plenty of low-pressure water for at least 15 minutes. Get

immediate medical attention.
INHALATION:
If nasal, throat or lung irritation develops - remove to fresh air and get medical attention.
INGESTION:
Do not feed anything by mouth to an unconscious or convulsive victim. Do not induce vomiting. Immediately contact physician. Dilute contents of stomach using 2-8 fluid ounces (60-240 mL) of milk or water.
NOTES TO PHYSICIANS:
No special instructions

5 Fire-fighting measures

Substance or Preparation: SPECTRUS BD1500 Page 2
FIRE FIGHTING INSTRUCTIONS:
Fire fighters should wear positive pressure self-contained breathing apparatus (full face-piece type).
EXTINGUISHING MEDIA:
dry chemical, carbon dioxide, foam or water
HAZARDOUS DECOMPOSITION PRODUCTS:
oxides of carbon
FLASH POINT:
> 200F > 93C SETA(CC)

6 Accidental release measures

PROTECTION AND SPILL CONTAINMENT:
Ventilate area. Use specified protective equipment. Contain and absorb on absorbent material. Place in waste disposal container. Flush area with water. Wet area may be slippery. Spread sand/grit.
DISPOSAL INSTRUCTIONS:
Water contaminated with this product may be sent to a sanitary sewer treatment facility,in accordance with any local agreement,a permitted waste treatment facility or discharged under a permit. Product as is - Incinerate or land dispose in an approved landfill.

7 Handling and storage

HANDLING:
Alkaline. Do not mix with acidic material.
STORAGE:
Keep containers closed when not in use. Reasonable and safe chemical storage. Store away from acids.

8 Exposure controls / personal protection

EXPOSURE LIMITS
This product is not hazardous as defined by OSHA regulations.
ENGINEERING CONTROLS:
adequate ventilation
PERSONAL PROTECTIVE EQUIPMENT:
Use protective equipment in accordance with 29CFR 1910 Subpart I
RESPIRATORY PROTECTION:
A RESPIRATORY PROTECTION PROGRAM THAT MEETS OSHA'S 29 CFR 1910.134 AND ANSI Z88.2 REQUIREMENTS MUST BE FOLLOWED WHENEVER WORKPLACE CONDITIONS WARRANT A RESPIRATOR'S USE.
USE AIR PURIFYING RESPIRATORS WITHIN USE LIMITATIONS ASSOCIATED WITH THE EQUIPMENT OR ELSE USE SUPPLIED AIR-RESPIRATORS.
If air-purifying respirator use is appropriate, use any of the following particulate respirators: N95, N99, N100, R95, R99, R100, P95, P99 or P100.
SKIN PROTECTION:
rubber, butyl or viton gloves -- Wash off after each use. Replace as necessary.
EYE PROTECTION:
splash proof chemical goggles
Substance or Preparation: SPECTRUS BD1500 Page 3

9 Physical and chemical properties

Spec. Grav.(70F,21C) 1.020 Vapor Pressure (mmHG) ~ 18.0

Freeze Point (F) 31 Vapor Density (air=1) < 1.00
Freeze Point (C) -1
Viscosity(cps 70F,21C) 30 % Solubility (water) 100.0
Odor Slight
Appearance Colorless
Physical State Liquid
Flash Point SETA(CC) > 200F > 93C
pH As Is (approx.) 12.5
Evaporation Rate (Ether=1) < 1.00
Percent VOC: 0.0
NA = not applicable ND = not determined

10 Stability and reactivity

CHEMICAL STABILITY:
Stable under normal storage conditions.
POSSIBILITY OF HAZARDOUS REACTIONS:
Contact with strong acids may cause a violent reaction releasing heat. Contact with water reactive compounds may cause fire or explosion.
INCOMPATIBILITIES:
May react with strong oxidizers.
DECOMPOSITION PRODUCTS:
Oxides of carbon

11 Toxicological information

Oral LD50 RAT: >5000 mg/kg
NOTE - Calculated value according to GHS additivity formula
Dermal LD50 RABBIT: >5000 mg/kg
NOTE - Calculated value according to GHS additivity formula

12 Ecological information

AQUATIC TOXICOLOGY
Ceriodaphnia 48 Hour Static Renewal Bioassay
LC50 Greater Than= 3000 mg/L
Ceriodaphnia 7 Day Static Renewal Bioassay
IC25 = 652 mg/L
Daphnia magna 48 Hour Static Acute Bioassay
0% Mortality= 2000 mg/L
Fathead Minnow 7 Day Static Renewal Bioassay
IC25 = 3000; LC50 Greater Than= 3000 mg/L
Fathead Minnow 96 Hour Static Bioassay with 48-Hour Renewal
0% Mortality= 2000 mg/L
Menidia beryllina (Silversides) 96 Hour Static Acute Bioassay
0% Mortality= 5000 mg/L
Mysid Shrimp 96 Hour Static Acute Bioassay
25% Mortality= 5000; No Effect Level= 2500 mg/L
Rainbow Trout 96 Hour Static Renewal Bioassay
Substance or Preparation: SPECTRUS BD1500 Page 4
No Effect Level= 3000 mg/L
No Data Available.
BIODEGRADATION
BOD-28 (mg/g): 5
BOD-5 (mg/g): 4
COD (mg/g): 341
TOC (mg/g): 80

13 Disposal considerations

If this undiluted product is discarded as a waste, the US RCRA hazardous waste identification number is :
D002=Corrosive(pH).
Please be advised; however, that state and local requirements for waste disposal may be more restrictive or otherwise different from federal regulations. Consult state and local regulations regarding the proper disposal of this material.

14 Transport information

Transportation Hazard: Not Applicable
DOT: Not Regulated

DOT EMERGENCY RESPONSE GUIDE #: Not applicable
Note: Some containers may be DOT exempt, please check BOL for exact container classification
IATA: Not Regulated
IMDG: Not Regulated

15 Regulatory information

TSCA:
All components of this product are included on or are in compliance with the U.S. TSCA regulations.
CERCLA AND/OR SARA REPORTABLE QUANTITY (RQ):
No regulated constituent present at OSHA thresholds
FOOD AND DRUG ADMINISTRATION:
21 CFR 176.170 (components of paper and paperboard in contact with aqueous and fatty foods)
NSF Registered and/or meets USDA (according to 1998 Guidelines):
Registration number: 141059
Category Code(s): G5 Cooling and retort water treatment products - all food processing areas G7 Boiler treatment products - all food processing areas/nonfood contact
SARA SECTION 312 HAZARD CLASS:
Product is non-hazardous under Section 311/312
SARA SECTION 302 CHEMICALS:
No regulated constituent present at OSHA thresholds
SARA SECTION 313 CHEMICALS:
No regulated constituent present at OSHA thresholds
CALIFORNIA REGULATORY INFORMATION
Substance or Preparation: SPECTRUS BD1500 Page 5
CALIFORNIA SAFE DRINKING WATER AND TOXIC ENFORCEMENT ACT (PROPOSITION 65):
This product contains one or more ingredients at trace levels known to the state of California to cause cancer and reproductive toxicity.
MICHIGAN REGULATORY INFORMATION
No regulated constituent present at OSHA thresholds

16 Other information

HMIS vII CODE TRANSLATION
Health 1 Slight Hazard
Fire 0 Minimal Hazard
Reactivity 0 Minimal Hazard
Special ALK pH above 12.0
(1) Protective Equipment B Goggles,Gloves
(1) refer to section 8 of MSDS for additional protective equipment recommendations.

SPECTRUS DT1404

1 Identification

Identification of substance or preparation
SPECTRUS DT1404
Product Application Area
Chemical cleaning compound.
Company/Undertaking Identification
GE Betz, Inc.
4636 Somerton Road
Trevose, PA 19053
T 215 355-3300, F 215 953 5524
Emergency Telephone
(800) 877-1940
Prepared by Product Stewardship Group: T 215-355-3300 Prepared on: 17-FEB-2012

2 Hazard(s) identification

****
EMERGENCY OVERVIEW
CAUTION
May cause slight irritation to the skin. May cause slight irritation to the eyes. Dusts or mists are irritating to mucous membranes. Repeated exposure may result in respiratory sensitization.
DOT hazard: Corrosive to steel
Odor: Mild; Appearance: Colorless To Yellow, Liquid
Fire fighters should wear positive pressure self-contained breathing apparatus(full face-piece type). Proper fire-extinguishing media: dry chemical, carbon dioxide, foam or water
****
POTENTIAL HEALTH EFFECTS
ACUTE SKIN EFFECTS:
Primary route of exposure; May cause slight irritation to the skin.
ACUTE EYE EFFECTS:
May cause slight irritation to the eyes.
ACUTE RESPIRATORY EFFECTS:
Dusts or mists are irritating to mucous membranes. Repeated
Substance or Preparation: SPECTRUS DT1404 Page 1
exposure may result in respiratory sensitization.
INGESTION EFFECTS:
May cause gastrointestinal irritation. Very large doses may cause diarrhea, depression, colic and death. May also cause severe allergic reactions in sensitive individuals.
TARGET ORGANS:
Prolonged or repeated exposures may cause primary irritant dermatitis, skin sensitization, and/or allergic respiratory reactions.
MEDICAL CONDITIONS AGGRAVATED:
Asthma.
SYMPTOMS OF EXPOSURE:
Inhalation may cause eye, nose, throat and lung irritation and possible respiratory sensitization or asthma. Skin contact may cause moderate irritation to severe burns and sensitization.

3 Composition / information on ingredients

Information for specific product ingredients as required by the U.S. OSHA HAZARD COMMUNICATION STANDARD is listed. Refer to additional sections of this MSDS for our assessment of the potential hazards of this formulation.
HAZARDOUS INGREDIENTS:
Cas# Chemical Name Range(w/w%)
7631-90-5 SODIUM BISULFITE 30-60
may generate SO2 IARC=3 (carcinogen status not classifiable)

4 First-aid measures

SKIN CONTACT:
Wash thoroughly with soap and water. Remove contaminated clothing. Thoroughly wash clothing before reuse. Immediately contact a physician.
EYE CONTACT:
Remove contact lenses. Hold eyelids apart. Immediately flush eyes with plenty of low-pressure water for at least 15 minutes. Get immediate medical attention.
INHALATION:
If nasal, throat or lung irritation develops - remove to fresh air and get medical attention.
INGESTION:
Do not feed anything by mouth to an unconscious or convulsive victim. Do not induce vomiting. Immediately contact physician. Dilute contents of stomach using 2-8 fluid ounces (60-240 mL) of milk or water.
NOTES TO PHYSICIANS:
No special instructions
Substance or Preparation: SPECTRUS DT1404 Page 2

5 Fire-fighting measures

FIRE FIGHTING INSTRUCTIONS:
Fire fighters should wear positive pressure self-contained breathing apparatus (full face-piece type).
EXTINGUISHING MEDIA:
dry chemical, carbon dioxide, foam or water
HAZARDOUS DECOMPOSITION PRODUCTS:
oxides of sulfur
FLASH POINT:
> 200F > 93C P-M(CC)
MISCELLANEOUS:
Corrosive to steel
UN 2693;Emergency Response Guide #154

6 Accidental release measures

PROTECTION AND SPILL CONTAINMENT:
Ventilate area. Use specified protective equipment. Contain and absorb on absorbent material. Place in waste disposal container. Flush area with water. Wet area may be slippery. Spread sand/grit.
DISPOSAL INSTRUCTIONS:
Water contaminated with this product may be sent to a sanitary sewer treatment facility,in accordance with any local agreement,a permitted waste treatment facility or discharged under a permit. Product as is - Incinerate or land dispose in an approved landfill.

7 Handling and storage

HANDLING:
Vent carefully before opening. Sulfur dioxide can be formed during the normal use and handling of this product.
STORAGE:
Keep containers closed when not in use. Protect from freezing. If frozen, thaw and mix completely prior to use. Shelf life 270 days.

8 Exposure controls / personal protection

EXPOSURE LIMITS
CHEMICAL NAME
SODIUM BISULFITE
PEL (OSHA): LIMITS HAVE NOT BEEN ESTABLISHED BY US OSHA.
TLV (ACGIH): TWA = 5 MG/M3; A4
ENGINEERING CONTROLS:
Adequate ventilation to maintain air contaminants below exposure limits.
PERSONAL PROTECTIVE EQUIPMENT:
Use protective equipment in accordance with 29CFR 1910 Subpart I
RESPIRATORY PROTECTION:

A RESPIRATORY PROTECTION PROGRAM THAT MEETS OSHA'S 29 CFR 1910.134 AND ANSI Z88.2 REQUIREMENTS MUST BE FOLLOWED WHENEVER WORKPLACE CONDITIONS WARRANT A RESPIRATOR'S USE.
USE AIR PURIFYING RESPIRATORS WITHIN USE LIMITATIONS ASSOCIATED
Substance or Preparation: SPECTRUS DT1404 Page 3
WITH THE EQUIPMENT OR ELSE USE SUPPLIED AIR-RESPIRATORS.
If air-purifying respirator use is appropriate, use a respirator with acid gas cartridges and any of the following particulate respirators: N95, N99, N100, R95, R99, R100, P95, P99 or P100.

SKIN PROTECTION:
rubber, butyl, viton or neoprene gloves -- Wash off after each use. Replace as necessary.

EYE PROTECTION:
splash proof chemical goggles

9 Physical and chemical properties

Spec. Grav.(70F,21C) 1.360 Vapor Pressure (mmHG) ~ 18.0
Freeze Point (F) 27 Vapor Density (air=1) < 1.00
Freeze Point (C) -3
Viscosity(cps 70F,21C) 20 % Solubility (water) 100.0
Odor Mild
Appearance Colorless To Yellow
Physical State Liquid
Flash Point P-M(CC) > 200F > 93C
pH As Is (approx.) 3.8
Evaporation Rate (Ether=1) < 1.00
Percent VOC: 0.0

NA = not applicable ND = not determined

10 Stability and reactivity

CHEMICAL STABILITY:
Stable under normal storage conditions.

POSSIBILITY OF HAZARDOUS REACTIONS:
No known hazardous reactions.

INCOMPATIBILITIES:
May react with strong oxidizers and amines.

DECOMPOSITION PRODUCTS:
oxides of sulfur

11 Toxicological information

Oral LD50 RAT: 2,000 mg/kg
Dermal LD50 RABBIT: >2,000 mg/kg
NOTE - Estimated value

12 Ecological information

AQUATIC TOXICOLOGY
Daphnia magna 48 Hour Static Renewal Bioassay
LC50= 175; No Effect Level= 125 mg/L
Fathead Minnow 96 Hour Static Renewal Bioassay
LC50= 175; No Effect Level= 125 mg/L
Rainbow Trout 96 Hour Static Renewal Bioassay (pH adjusted)
Substance or Preparation: SPECTRUS DT1404 Page 4
LC50= 330; No Effect Level= 125 mg/L

BIODEGRADATION
Product contains only inorganics that are not subject to typical biological degradation. Assimilation by microbes may occur in waste treatment or the environment.

13 Disposal considerations

If this undiluted product is discarded as a waste, the US RCRA hazardous waste identification number is :
D002=Corrosive(steel).
Please be advised; however, that state and local requirements for waste disposal may be more restrictive or otherwise different from federal regulations. Consult state and local regulations regarding the proper disposal of this material.

14 Transport information

Transportation Hazard: Corrosive to steel
DOT: BISULFITES, AQUEOUS SOLUTIONS, N.O.S.(SODIUM BISULFITE SOLUTION)
8, UN2693, PG III, RQ
DOT EMERGENCY RESPONSE GUIDE #: 154
Note: Some containers may be DOT exempt, please check BOL for exact container classification
IATA: BISULPHITES, AQUEOUS SOLUTIONS, N.O.S.(SODIUM BISULFITE SOLUTION)
8, UN2693, PG III
IMDG: BISULPHITES, AQUEOUS SOLUTION, N.O.S.(SODIUM BISULPHITE SOLUTION)
8, UN2693, PG III

15 Regulatory information

TSCA:
All components of this product are included on or are in compliance with the U.S. TSCA regulations.
CERCLA AND/OR SARA REPORTABLE QUANTITY (RQ):
1,104 gallons due to SODIUM BISULFITE;
NSF Registered and/or meets USDA (according to 1998 Guidelines):
Registration number: Not Registered
SARA SECTION 312 HAZARD CLASS:
Immediate(acute);Delayed(Chronic)
SARA SECTION 302 CHEMICALS:
No regulated constituent present at OSHA thresholds
SARA SECTION 313 CHEMICALS:
No regulated constituent present at OSHA thresholds
CALIFORNIA REGULATORY INFORMATION
CALIFORNIA SAFE DRINKING WATER AND TOXIC ENFORCEMENT ACT (PROPOSITION 65):
No regulated constituents present
Substance or Preparation: SPECTRUS DT1404 Page 5
MICHIGAN REGULATORY INFORMATION
No regulated constituent present at OSHA thresholds

16 Other information

HMIS vII CODE TRANSLATION
Health 1 Slight Hazard
Fire 0 Minimal Hazard
Reactivity 0 Minimal Hazard
Special NONE No special Hazard
(1) Protective Equipment B Goggles,Gloves
(1) refer to section 8 of MSDS for additional protective equipment recommendations.
CHANGE LOG
EFFECTIVE

STEAMATE NA1324

1 Identification

Identification of substance or preparation
STEAMATE NA1324
Product Application Area
Steam condensate treatment.
Company/Undertaking Identification
GE Betz, Inc.
4636 Somerton Road
Trevose, PA 19053
T 215 355-3300, F 215 953 5524
Emergency Telephone
(800) 877-1940
Prepared by Product Stewardship Group: T 215-355-3300 Prepared on: 30-NOV-2011

2 Hazard(s) identification

****
EMERGENCY OVERVIEW
DANGER
Corrosive. Absorbed by skin. Corrosive to the eyes. Vapors, gases, mists and/or aerosols cause irritation to the upper respiratory tract.
DOT hazard: Corrosive to skin
Odor: Strong Ammonia; Appearance: Colorless, Liquid
Fire fighters should wear positive pressure self-contained breathing apparatus(full face-piece type). Proper fire-extinguishing media: dry chemical, carbon dioxide, foam or water
****
POTENTIAL HEALTH EFFECTS
ACUTE SKIN EFFECTS:
Primary route of exposure; Corrosive. Absorbed by skin.
ACUTE EYE EFFECTS:
Corrosive to the eyes.
ACUTE RESPIRATORY EFFECTS:
Primary route of exposure;Vapors, gases, mists and/or aerosols cause irritation to the upper respiratory tract.
Substance or Preparation: STEAMATE NA1324 Page 1
INGESTION EFFECTS:
May cause severe irritation or burning of mouth, throat, and gastrointestinal tract with severe chest and abdominal pain, nausea, vomiting, diarrhea, lethargy and collapse. Possible death when ingested in very large doses.
TARGET ORGANS:
Prolonged or exposures may cause primary irritant dermatitis, tissue necrosis, and/or toxicity to the liver and kidney.
MEDICAL CONDITIONS AGGRAVATED:
Pre-existing skin disorders and chronic respiratory disease.
SYMPTOMS OF EXPOSURE:
Symptoms range from headache, eye irritation, chest pain, nausea and vomiting to severe coughing, difficulty in breathing, pulmonary edema and production of pink frothy sputum.

3 Composition / information on ingredients

Information for specific product ingredients as required by the U.S. OSHA HAZARD COMMUNICATION STANDARD is listed. Refer to additional sections of this MSDS for our assessment of the potential hazards of this formulation.
HAZARDOUS INGREDIENTS:
Cas# Chemical Name Range(w/w%)
1336-21-6 AMMONIUM HYDROXIDE 30-60
Corrosive; toxic (by ingestion)
141-43-5 MONOETHANOLAMINE 3-7
Combustible; corrosive; irritant; CNS depressant; may cause liver and kidney toxicity; fetotoxic and

developmental toxin in laboratory animals

4 First-aid measures

SKIN CONTACT:
URGENT! Wash thoroughly with soap and water. Remove contaminated clothing. Get immediate medical attention. Thoroughly wash clothing before reuse.
EYE CONTACT:
URGENT! Immediately flush eyes with plenty of low-pressure water for at least 20 minutes while removing contact lenses. Hold eyelids apart. Get immediate medical attention.
INHALATION:
If nasal, throat or lung irritation develops - remove to fresh air and get medical attention.
INGESTION:
Do not feed anything by mouth to an unconscious or convulsive victim. Do not induce vomiting. Immediately contact physician. Rinse mouth with plenty of water. Dilute contents of stomach using 4-10 fluid ounces (120-300 mL) of milk or water.
Substance or Preparation: STEAMATE NA1324 Page 2
NOTES TO PHYSICIANS:
Material is corrosive. It may not be advisable to induce vomiting. Possible mucosal damage may contraindicate the use of gastric lavage.

5 Fire-fighting measures

FIRE FIGHTING INSTRUCTIONS:
Fire fighters should wear positive pressure self-contained breathing apparatus (full face-piece type).
EXTINGUISHING MEDIA:
dry chemical, carbon dioxide, foam or water
HAZARDOUS DECOMPOSITION PRODUCTS:
oxides of carbon and nitrogen, ammonia and volatile amines
FLASH POINT:
> 213F > 101C P-M(CC)
MISCELLANEOUS:
Corrosive to skin
UN 2672;Emergency Response Guide #154

6 Accidental release measures

PROTECTION AND SPILL CONTAINMENT:
Ventilate area. Use specified protective equipment. Contain and absorb on absorbent material. Place in waste disposal container. Flush area with water. Wet area may be slippery. Spread sand/grit.
DISPOSAL INSTRUCTIONS:
Water contaminated with this product may be sent to a sanitary sewer treatment facility,in accordance with any local agreement,a permitted waste treatment facility or discharged under a permit. Product as is - Incinerate or land dispose in an approved landfill.

7 Handling and storage

HANDLING:
Alkaline. Corrosive(Skin/eyes). Do not mix with acidic material.
STORAGE:
Keep containers closed when not in use. Store in cool, well ventilated area. Protect from freezing. If frozen, thaw completely and mix thoroughly prior to use. Store away from acids.

8 Exposure controls / personal protection

EXPOSURE LIMITS
CHEMICAL NAME
AMMONIUM HYDROXIDE
PEL (OSHA): 50 PPM(35PPM-STEL)
TLV (ACGIH): 25 PPM(35PPM-STEL)
MONOETHANOLAMINE
PEL (OSHA): 3 PPM (6 MG/M3)
TLV (ACGIH): TWA = 3 PPM; STEL = 6 PPM
MISC: NIOSH REL = 3 PPM (8 MG/M3); NIOSH STEL = 6 PPM (15 MG/M3);
NIOSH IDLH = 30 PPM
Substance or Preparation: STEAMATE NA1324 Page 3
ENGINEERING CONTROLS:
Adequate ventilation to maintain air contaminants below exposure

limits.
PERSONAL PROTECTIVE EQUIPMENT:
Use protective equipment in accordance with 29CFR 1910 Subpart I
RESPIRATORY PROTECTION:
A RESPIRATORY PROTECTION PROGRAM THAT MEETS OSHA'S 29 CFR 1910.134 AND ANSI Z88.2 REQUIREMENTS MUST BE FOLLOWED WHENEVER WORKPLACE CONDITIONS WARRANT A RESPIRATOR'S USE. USE AIR PURIFYING RESPIRATORS WITHIN USE LIMITATIONS ASSOCIATED WITH THE EQUIPMENT OR ELSE USE SUPPLIED AIR-RESPIRATORS.
If air-purifying respirator use is appropriate, use a respirator with ammonia/methylamine cartridges.
SKIN PROTECTION:
gauntlet-type butyl or neoprene gloves, chemical resistant apron -- Wash off after each use. Replace as necessary.
EYE PROTECTION:
splash proof chemical goggles, face shield

9 Physical and chemical properties

Spec. Grav.(70F,21C) 0.936 Vapor Pressure (mmHG) ~ 240.0
Freeze Point (F) -24 Vapor Density (air=1) < 1.00
Freeze Point (C) -31
Viscosity(cps 70F,21C) 6 % Solubility (water) 100.0
Odor Strong Ammonia
Appearance Colorless
Physical State Liquid
Flash Point P-M(CC) > 213F > 101C
pH As Is (approx.) 13.0
Evaporation Rate (Ether=1) < 1.00
Percent VOC: 4.0
NA = not applicable ND = not determined

10 Stability and reactivity

CHEMICAL STABILITY:
Stable under normal storage conditions.
POSSIBILITY OF HAZARDOUS REACTIONS:
Contact with strong acids may cause a violent reaction releasing heat.
INCOMPATIBILITIES:
May react with acids.
DECOMPOSITION PRODUCTS:
oxides of carbon and nitrogen, ammonia and volatile amines

11 Toxicological information

Oral LD50 RAT: 960 mg/kg
NOTE - Calculated value according to GHS additivity formula
Dermal LD50 RABBIT: >5000 mg/kg
NOTE - Calculated value according to GHS additivity formula
Substance or Preparation: STEAMATE NA1324 Page 4

12 Ecological information

AQUATIC TOXICOLOGY
Daphnia magna 48 Hour Static Acute Bioassay (Estimated)
LC50= 277; 100% Mortality= 165 mg/L
Fathead Minnow 96 Hour Static Acute Bioassay (Estimated)
LC50= 120; No Effect Level= 86 mg/L
BIODEGRADATION
BOD-28 (mg/g): 27
BOD-5 (mg/g): 28
COD (mg/g): 62
TOC (mg/g): 17

13 Disposal considerations

If this undiluted product is discarded as a waste, the US RCRA hazardous waste identification number is : D002=Corrosive(pH). Please be advised; however, that state and local requirements for waste disposal may be more restrictive or otherwise different from federal regulations. Consult state and local regulations regarding the proper disposal of this material.

14 Transport information

Transportation Hazard: Corrosive to skin
DOT: AMMONIA SOLUTION
8, UN2672, PG III, RQ

DOT EMERGENCY RESPONSE GUIDE #: 154
Note: Some containers may be DOT exempt, please check BOL for exact container classification
IATA: AMMONIA SOLUTION
8, UN2672, PG III
IMDG: AMMONIA SOLUTION
8, UN2672, PG III

15 Regulatory information

TSCA:
All components of this product are included on or are in compliance with the U.S. TSCA regulations.
CERCLA AND/OR SARA REPORTABLE QUANTITY (RQ):
363 gallons due to AMMONIUM HYDROXIDE;
NSF Registered and/or meets USDA (according to 1998 Guidelines):
Registration number: Not Registered
SARA SECTION 312 HAZARD CLASS:
Immediate(acute);Delayed(Chronic)
SARA SECTION 302 CHEMICALS:
No regulated constituent present at OSHA thresholds
SARA SECTION 313 CHEMICALS:
CAS# CHEMICAL NAME RANGE
1336-21-6 AMMONIUM HYDROXIDE 31.0-40.0%
CALIFORNIA REGULATORY INFORMATION
Substance or Preparation: STEAMATE NA1324 Page 5
CALIFORNIA SAFE DRINKING WATER AND TOXIC ENFORCEMENT ACT (PROPOSITION 65):
This product contains one or more ingredients at trace levels known to the state of California to cause cancer and reproductive toxicity.
MICHIGAN REGULATORY INFORMATION
No regulated constituent present at OSHA thresholds

16 Other information

HMIS vII CODE TRANSLATION
Health 3 Serious Hazard
Fire 0 Minimal Hazard
Reactivity 0 Minimal Hazard
Special CORR DOT corrosive
(1) Protective Equipment D Goggles,Face Shield,Gloves,Apron
(1) refer to section 8 of MSDS for additional protective equipment recommendations.

THERMINOL® VP1 Heat transfer fluid

Material Safety Data Sheet
Product name: THERMINOL® VP1 Heat transfer fluid
Reference Number: 000000000211 Date: 05/18/2012
Company Information:
United States: Canada:
Solutia Inc. Solutia Canada Inc.
575 Maryville Center Drive, P.O. Box 66760 7475 Boul Newman Suite 301
St. Louis, MO 63166-6760 LaSalle, QC H8N 1X3
Emergency telephone: Chemtrec: 1-800-424-9300 Emergency telephone: CANUTEC: 1-613-996-6666
International Emergency telephone: Chemtrec: 703-527-3887
Non-Emergency telephone: 1-314-674-6661
Non-Emergency telephone: 1-314-674-6661
Mexico: Brazil:
Solutia MEXICO, S. DE R.L. DE C.V. Solutia Brazil Ltd.
Prol. Paseo de la Reforma 2654 Local 501, Piso-5
Avenue Carlos Marcondes, 1200 CEP: 12241-420-São José dos Campos/SP-Brazil
Col. Lomas Altas 11950 Mexico, D.F.
Emergency telephone: SETIQ: (in Mexico) 01-800-002-1400
Non-Emergency telephone: (in Mexico) 01-55-5259-6800
Emergency telephone: 55 12 3932 7100 (PABX)
Non-Emergency telephone: 55 11 3365 1800 (PABX)

2. HAZARDS IDENTIFICATION

EMERGENCY OVERVIEW
Form: liquid
Color: clear to colorless
Odor: characteristic
WARNING STATEMENTS
WARNING!
Causes eye irritation
Causes skin irritation
Causes respiratory tract irritation
Contains material which can cause liver and nerve damage
POTENTIAL HEALTH EFFECTS
Product name: THERMINOL® VP1 Heat transfer fluid Page 2 / 8
Solutia Inc. Material Safety Data Sheet Date: 05/18/2012
Reference Number: 000000000211 Version 5.4/E
Likely routes of exposure:
eye and skin contact
inhalation
Eye contact: Highly irritating to eyes. Skin contact: Highly irritating to skin. Prolonged or repeated skin contact may result in irritant dermatitis. Inhalation: Severely irritating if inhaled. No more than slightly toxic if inhaled. Significant adverse health effects are not expected to develop under normal conditions of exposure. Ingestion: No more than slightly toxic if swallowed. Significant adverse health effects are not expected to develop if only small amounts (less than a mouthful) are swallowed.
Signs and symptoms of overexposure: headache fatigue nausea/vomiting indigestion abdominal pain tremors
Target organs/systems: May cause liver damage. May cause nerve damage. Refer to Section 11 for toxicological information.

3. COMPOSITION/INFORMATION ON INGREDIENTS

Components CAS No. Average range
Units
diphenyl ether 101-84-8 73.5 % biphenyl 92-52-4 26.5 %

4. FIRST AID MEASURES

If in eyes: Immediately flush with plenty of water for at least 15 minutes.
If easy to do, remove any contact lenses.
Get medical attention.
Remove material from skin and clothing.
If on skin: Immediately flush the area with plenty of water.
Remove contaminated clothing.
Wash skin gently with soap as soon as it is available.
Get medical attention.
Wash clothing before reuse.
If inhaled: Remove patient to fresh air.
If not breathing, give artificial respiration.

If breathing is difficult give oxygen.
Remove material from eyes, skin and clothing.
Product name: THERMINOL® VP1 Heat transfer fluid Page 3 / 8
Solutia Inc. Material Safety Data Sheet Date: 05/18/2012
Reference Number: 000000000211 Version 5.4/E
If swallowed: Immediate first aid is not likely to be required.
A physician or Poison Control Center can be contacted for advice.
Wash heavily contaminated clothing before reuse.

5. FIRE FIGHTING MEASURES

Fire point:
127 C
Hazardous products of combustion:
carbon monoxide (CO); carbon dioxide; hydrocarbons
Extinguishing media:
Water spray, foam, dry chemical, or carbon dioxide
Unusual fire and explosion hazards:
None known
Fire fighting equipment:
Firefighters, and others exposed, wear self-contained breathing apparatus.
Equipment should be thoroughly decontaminated after use.
Miscellaneous advice: This product is not classified as a fire-resistant heat transfer fluid.
Precautions to avoid sources of ignitions should be taken.

6. ACCIDENTAL RELEASE MEASURES

Personal precautions:
Use personal protection recommended in section 8.
Environmental
precautions:
Keep out of drains and water courses.
Methods for cleaning up:
Contain large spills with dikes and transfer the material to appropriate containers for
reclamation or disposal. Absorb remaining material or small spills with an inert material
and then place in a chemical waste container. Flush spill area with water.
Refer to Section 13 for disposal information and Sections 14 and 15 for reportable quantity information.

7. HANDLING AND STORAGE

Handling
Avoid contact with eyes, skin and clothing.
Avoid breathing vapor or mist.
Keep container closed.
Use with adequate ventilation.
Wash thoroughly after handling.
Precautions against ignitions and fire should be taken with this product.
Heat transfer fluids are intended for INDIRECT heating purposes ONLY.
This product has not been approved for food grade use. Emptied containers retain vapor and product residue. Observe all recommended safety precautions until container is cleaned, reconditioned or destroyed. Do not cut, drill, grind or weld on or near this container. The reuse of this material's container for non industrial purposes is prohibited and any reuse must be in consideration of the data provided in this material safety data sheet. Storage
General: Stable under normal conditions of handling and storage.

8. EXPOSURE CONTROLS/PERSONAL PROTECTION

Product name: THERMINOL® VP1 Heat transfer fluid Page 4 / 8
Solutia Inc. Material Safety Data Sheet Date: 05/18/2012
Reference Number: 000000000211 Version 5.4/E
Airborne exposure limits: (ml/m3 = ppm)
THERMINOL® VP1
No specific occupational exposure limit has been established.
biphenyl
ACGIH TLV: 0.2 ml/m3 ; mist ; 8-hr TWA
OSHA PEL: 0.2 ml/m3 ; 1.0 mg/m3 ; ; 8-hr TWA
Mexican OEL: 0.2 ml/m3 ; 1.5 mg/m3 ; ; 8-hr TWA
Mexican OEL: 0.6 ml/m3 ; 4 mg/m3 ; ; 15-min STEL
diphenyl ether
ACGIH TLV: 1 ml/m3 ; ; 8-hr TWA
ACGIH TLV: 2 ml/m3 ; ; 15-min STEL
OSHA PEL: 1 ml/m3 ; 7 mg/m3 ; ; 8-hr TWA
Mexican OEL: 1 ml/m3 ; 7 mg/m3 ; ; 8-hr TWA

Mexican OEL: 2 ml/m3 ; 14 mg/m3 ; ; 15-min STEL
Eye protection: Wear safety goggles. Have eye flushing equipment available. Hand protection: Wear chemical resistant gloves. Consult the glove/clothing manufacturer to determine the appropriate type glove/clothing for a given application. See Solutia Glove Facts for permeation data. Body protection: Wear suitable protective clothing. Consult the glove/clothing manufacturer to determine the appropriate type glove/clothing for a given application. Wear full protective clothing if exposed to splashes. Wash contaminated skin promptly. Launder contaminated clothing and clean protective equipment before reuse. Wash thoroughly after handling. Have safety shower available at locations where skin contact can occur. Respiratory protection: Avoid breathing vapour or mist. Use approved respiratory protection equipment (full face piece recommended) when airborne exposure limits are exceeded. If used, full facepiece replaces the need for face shield and/or chemical goggles. Consult the respirator manufacturer to determine the appropriate type of equipment for a given application. Observe respirator use limitations specified by the manufacturer. Ventilation: Provide natural or mechanical ventilation to control exposure levels below airborne exposure limits. If practical, use local mechanical exhaust ventilation at sources of air contamination such as processing equipment. Components referred to herein may be regulated by specific Canadian provincial legislation. Please refer to exposure limits legislated for the province in which the substance will be used.

9. PHYSICAL AND CHEMICAL PROPERTIES

Flash point: 110 C Pensky-Martens closed tester
124 C Cleveland Open Cup
Product name: THERMINOL® VP1 Heat transfer fluid Page 5 / 8
Solutia Inc. Material Safety Data Sheet Date: 05/18/2012
Reference Number: 000000000211 Version 5.4/E
Autoignition temperature: 612 C ASTM D-2155
Density: 1.06 g/cm3 @ 25 C
Boiling point : 257 C
Crystallising point : 12 C
Water solubility: ~25 mg/l
NOTE: These physical data are typical values based on material tested but may vary from sample to sample. Typical values should not be construed as a guaranteed analysis of any specific lot or as specifications for the product.

10. STABILITY AND REACTIVITY

Conditions to avoid: All sources of ignition.
Materials to avoid: Contact with strong oxidizing agents.
Hazardous reactions: Hazardous polymerization does not occur.
Hazardous decomposition
products:
None known;

11. TOXICOLOGICAL INFORMATION

This product has been tested for toxicity. Results from Solutia sponsored studies or from the available public literature are described below.
Acute animal toxicity data
Oral: LD50 , rat, 2,050 mg/kg , No more than slightly toxic
Dermal: LD50 , rabbit, > 5,010 mg/kg , Practically nontoxic after skin application in animal studies.
Inhalation: LC50 , rat, 2.66 mg/l , 4 h, Toxic based on animal inhalation exposure studies.
Skin irritation: rabbit , Slightly irritating to skin., 24 h
Repeat dose toxicity: rat, , inhalation, 13 weeks, , Produced effects on body weight, serum enzymes and/or organ weights in repeat dose studies.
Repeat dose toxicity: rat, , gavage, 26 weeks, , Produced effects on body weight, serum enzymes and/or organ weights in repeat dose studies. Effects only observed at very high dose levels. Target organs affected kidneys, liver, spleen. Repeat dose toxicity: rat, , diet, subchronic, , Repeated oral exposure produced liver and kidney changes in animal models. Target organs affected liver, kidneys Developmental toxicity: rat, gavage, , No effects on offspring observed in laboratory animals in the presence of maternal toxicity. Product name: THERMINOL® VP1 Heat transfer fluid Page 6.
Solutia Inc. Material Safety Data Sheet Date: 05/18/2012
Reference Number: 000000000211 Version 5.4/E
Mutagenicity: No genetic effects were observed in standard tests using bacterial and animal cells.
Components Data from Solutia studies and/or the available scientific literature on the components of this material which have been identified as hazardous chemicals under the criteria of the OSHA Hazard Communication Standard (29 CFR 1910.1200) or the Canadian Hazardous Products Act are discussed below. Biphenyl Chronic exposure has been reported to cause headache, fatigue, nausea, indigestion, abdominal pain, tremor, central and peripheral nerve damage and liver injury. Slightly toxic following oral administration.
Practically nontoxic after skin application in animal studies.
Practically non irritating to skin (rabbit).
Slightly irritating to eyes (rabbit). No mortality or signs of toxicity at the highest level achievable.
Irritating to respiratory system in animal models. Produced effects on body weight, serum enzymes and/or organ weights in repeat dose studies.

Produced no dermal sensitization (guinea pigs). No effects on offspring observed in laboratory animals in the presence of maternal toxicity.
No genetic effects were observed in standard tests using bacterial and animal cells.
diphenyl ether. Predictive patch testing on human volunteers did not produce irritation or sensitization.
Slightly toxic following oral administration.
Practically nontoxic after skin application in animal studies.
Slightly irritating to eyes (rabbit).
Slightly irritating to skin (rabbit).
Repeated exposure produced respiratory tract irritation in animal models.
Repeated exposure produced eye irritation in animal models.
No genetic effects were observed in standard tests using bacterial and animal cells.

12. ECOLOGICAL INFORMATION

Environmental Toxicity Invertebrates 48 h, EC50 Water flea (Daphnia magna) 2.4 mg/l Fish: 96 h, LC50 Rainbow trout (Oncorhynchus mykiss) 7.6 mg/l 96 h, LC50 Fathead minnow (Pimephales promelas) 24 mg/l
Algae: 96 h, EC50 Algae (Selenastrum capricornutum) 1.3 mg/l Biodegradation Modified SCAS (OECD 302A) Primary degradation 99 %

13. DISPOSAL CONSIDERATIONS

US EPA RCRA Status: This material when discarded may be a hazardous waste as that term is defined by the Resource Conservation and Recovery Act (RCRA), 40 CFR 261.24, due to its toxicity characteristic. This material should be analyzed in accordance with Method 1311 for the compound(s) below.
US EPA RCRA D018 Compound/Characteristic: BENZENE
Product name: THERMINOL® VP1 Heat transfer fluid Page 7 / 8
Solutia Inc. Material Safety Data Sheet Date: 05/18/2012
Reference Number: 000000000211 Version 5.4/E
hazardous waste number:
Disposal considerations:
Incineration
Miscellaneous advice:
This product meets the criteria for a synthetic used oil under the U.S. EPA Standards for the Management of Used Oil (40 CFR 279). Those standards govern recycling and disposal in lieu of 40 CFR 260 -272 of the Federal hazardous waste program in states that have adopted these used oil regulations. Consult your attorney or appropriate regulatory official to be sure these standards have been adopted in your state. Recycle or burn in accordance with the applicable standards.
Solutia operates a used fluid return program for certain fluids under these used oil standards. Contact your Sales Representative for details. This product should not be dumped, spilled, rinsed or washed into sewers or public waterways.

14. TRANSPORT INFORMATION

The data provided in this section is for information only. Please apply the appropriate regulations to properly classify your shipment for transportation.
US DOT
Proper shipping name: ENVIRONMENTALLY HAZARDOUS SUBSTANCE, LIQUID, N.O.S.
biphenyl
Hazard Class: 9
Hazard Identification number: UN3082
Packing Group: Packing Group III
Transport label: Class 9
Special provisions: This material meets the definition of a marine pollutant. Other: Applies ONLY to containers with an RQ or for shipments in bulk via water transportation. Canadian TDG Other: Not regulated for transport. Reportable Quantity/Limit
US DOT RQ 100 lb *biphenyl* Package size containing reportable amount: 377 lb
ICAO/IATA Class Other: See DOT Information

15. REGULATORY INFORMATION

All components are in compliance with
the following inventories:
U.S. TSCA, EU EINECS, Canadian DSL, Australian AICS, Korean,
Japanese ENCS, Phillipine PICCS, Chinese
Canadian WHMIS classification:
D2(A) - Materials Causing Other Toxic Effects
D2(B) - Materials Causing Other Toxic Effects
SARA Hazard Notification:
Hazard Categories Under Title III
Rules (40 CFR 370):
Immediate
Delayed
Product name: THERMINOL® VP1 Heat transfer fluid Page 8 / 8

Solutia Inc. Material Safety Data Sheet Date: 05/18/2012
Reference Number: 000000000211 Version 5.4/E
Section 302 Extremely Hazardous
Substances:
Not applicable
Section 313 Toxic Chemical(s):
biphenyl
CERCLA Reportable Quantity:
100 lbs biphenyl
For this/these chemicals, release of more than the Reportable Quantity to the environment in a 24 hour period requires notification to the National Response Center (800-424-8802 or 202-426-2675).This product has been classified in accordance with the hazard criteria of the Canadian Controlled Products Regulation and the MSDS contains all the information required by the Canadian Controlled Products Regulation. Refer to Section 11 for OSHA/HPA Hazardous Chemical(s) and Section 13 for RCRA classification. Safety data sheet also created in accordance with Brazilian law NBR 14725

16. OTHER INFORMATION

Product use: Heat transferring agents
Reason for revision: Routine review and update
Health Fire Reactivity Additional Information
Suggested NFPA Rating 2 1 0
Suggested HMIS Rating: 2 1 0 G
Prepared by the Solutia Hazard Communication Group. Please consult Solutia @ 314-674-6661 if further information is needed.
TM, ® is a registered trademark of Solutia Inc.
SOLUTIA is a trademark of Solutia Inc.
Responsible Care® is a registered trademark of the American Chemistry Council. Although the information and recommendations set forth herein (hereinafter "Information") are presented in good faith and believed to be correct as of the date hereof, Solutia Inc. makes no representations as to the completeness or accuracy thereof. Information is supplied upon the condition that the persons receiving same will make their own determination as to its suitability for their purposes prior to use. In no event will Solutia Inc. be responsible for damages of any nature whatsoever resulting from the use of or reliance upon Information. NO REPRESENTATIONS OR WARRANTIES, EITHER EXPRESS OR IMPLIED, OF MERCHANTABILITY, FITNESS FOR A PARTICULAR PURPOSE OR OF ANY OTHER NATURE ARE MADE HEREUNDER WITH RESPECT TO INFORMATION OR THE PRODUCT TO WHICH INFORMATION REFERS.

Material Safety Data Sheet

Section 1. Chemical product and company identification

Hydrogen

Supplier
1-866-734-3438
Synonym : Dihydrogen; o-Hydrogen; p-Hydrogen; Molecular hydrogen; H2; UN 1049; UN 1966; Liquid hydrogen
Emergency overview

Section 2. Hazards identification

Routes of entry
Potential acute health effects
Acts as a simple asphyxiant.
Contact with rapidly expanding gas may cause burns or frostbite. Contact with cryogenic liquid can cause frostbite and cryogenic burns.
Ingestion is not a normal route of exposure for gases Contact with cryogenic liquid can cause frostbite and cryogenic burns.
Contact with rapidly expanding gas may cause burns or frostbite. Contact with cryogenic liquid can cause frostbite and cryogenic burns.
Eyes
Skin
Inhalation
Ingestion
Physical state Gas or Liquid.
See toxicological information (Section 11)
WARNING!
GAS:
CONTENTS UNDER PRESURE.
Extremely flammable
Do not puncture or incinerate container.
Can cause rapid suffocation.
May cause severe frostbite.
LIQUID:
Extremely flammable
Extremely cold liquid and gas under pressure.
Can cause rapid suffocation.
May cause severe frostbite.
Do not puncture or incinerate container. May cause target organ damage, based on animal data.

Medical conditions
aggravated by overexposure
Pre-existing disorders involving any target organs mentioned in this MSDS as being at risk may be aggravated by over-exposure to this product.
:
Contact with rapidly expanding gases or liquids can cause frostbite.
Target organs : May cause damage to the following organs: lungs.

Potential chronic health effects
Chronic effects : May cause target organ damage, based on animal data.
Target organs : May cause damage to the following organs: lungs.
Build 1.1 *Page: 1/6*
Hydrogen
Hydrogen 1333-74-0 100 Oxygen Depletion [Asphyxiant]
Section 3. Composition, Information on Ingredients
Name CAS number % Volume Exposure limits
As this product is a gas, refer to the inhalation section.
Check for and remove any contact lenses. Immediately flush eyes with plenty of water for at least 15 minutes, occasionally lifting the upper and lower eyelids. Get medical attention immediately.
In case of contact, immediately flush skin with plenty of water for at least 15 minutes while removing contaminated clothing and shoes. Wash clothing before reuse. Clean shoes thoroughly before reuse. Get medical attention immediately.
Move exposed person to fresh air. If not breathing, if breathing is irregular or if respiratory arrest occurs, provide artificial respiration or oxygen by trained personnel. Loosen tight clothing such as a collar, tie, belt or waistband. Get medical attention immediately.
Section 4. First aid measures
Eye contact
Skin contact
Inhalation
Ingestion
No action shall be taken involving any personal risk or without suitable training.If it is suspected that fumes are still present,
the rescuer should wear an appropriate mask or self-contained breathing apparatus.It may be dangerous to the person
providing aid to give mouth-to-mouth resuscitation.
Frostbite : Try to warm up the frozen tissues and seek medical attention.
500 to 571°C (932 to 1059.8°F)
Flammable.
No specific data.
Lower: 4% Upper: 76%
Use an extinguishing agent suitable for the surrounding fire.
Extremely flammable in the presence of the following materials or conditions: oxidizing materials.
Section 5. Fire-fighting measures
Flammability of the product
Auto-ignition temperature
Flammable limits
Products of combustion
Fire hazards in the presence of various substances
Fire-fighting media and instructions
Apply water from a safe distance to cool container and protect surrounding area. If involved in fire, shut off flow immediately if it can be done without risk.
Contains gas under pressure. In a fire or if heated, a pressure increase will occur and the container may burst or explode.

Special protective
equipment for fire-fighters
Fire-fighters should wear appropriate protective equipment and self-contained breathing apparatus (SCBA) with a full face-piece operated in positive pressure mode.
Immediately contact emergency personnel. Keep unnecessary personnel away. Use suitable protective equipment (section 8). Shut off gas supply if this can be done safely. Isolate area until gas has dispersed.
Immediately contact emergency personnel. Stop leak if without risk. Note: see section 1 for emergency contact information and section 13 for waste disposal.
Environmental precautions
Section 6. Accidental release measures
: Avoid dispersal of spilled material and runoff and contact with soil, waterways, drains and sewers.
Personal precautions :
Methods for cleaning up :
High pressure gas. Do not puncture or incinerate container. Use equipment rated for cylinder pressure. Close valve after each use and when empty. Protect cylinders from physical damage; do not drag, roll, slide, or drop. Use a suitable hand truck for cylinder movement.
Never allow any unprotected part of the body to touch uninsulated pipes or vessels that contain cryogenic liquids. Prevent entrapment of liquid in closed systems or piping without pressure relief devices. Some materials may become brittle at low temperatures and will easily fracture.
Section 7. Handling and storage
Handling :
Build 1.1 *Page: 2/6*
Hydrogen
Cylinders should be stored upright, with valve protection cap in place, and firmly secured to prevent falling or being knocked over. Cylinder temperatures should not exceed 52 °C (125 °F).
For additional information concerning storage and handling refer to Compressed Gas Association pamphlets P-1 Safe Handling of Compressed Gases in Containers and P-12 Safe Handling of Cryogenic Liquids available from the Compressed Gas Association, Inc.
Storage :
Use only with adequate ventilation. Use process enclosures, local exhaust ventilation or other engineering controls to keep worker exposure to airborne contaminants below any recommended or statutory limits.
hydrogen Oxygen Depletion [Asphyxiant]
Section 8. Exposure controls/personal protection
Engineering controls
Product name
Use a properly fitted, air-purifying or air-fed respirator complying with an approved standard if a risk assessment indicates this is necessary. Respirator selection must be based on known or anticipated exposure levels, the hazards of the product and the safe working limits of the selected respirator.
Safety eyewear complying with an approved standard should be used when a risk assessment indicates this is necessary to avoid exposure to liquid splashes, mists or dusts.
Personal protective equipment for the body should be selected based on the task being

performed and the risks involved and should be approved by a specialist before handling this product.
\
Personal protection
Eyes
Skin
Respiratory
Consult local authorities for acceptable exposure limits.

Personal protection in case of a large spill
Self-contained breathing apparatus (SCBA) should be used to avoid inhalation of the product.
Chemical-resistant, impervious gloves complying with an approved standard should be worn at all times when handling chemical products if a risk assessment indicates this is necessary.
Hands :
The applicable standards are (US) 29 CFR 1910.134 and (Canada) Z94.4-93
When working with cryogenic liquids, wear a full face shield.
Insulated gloves suitable for low temperatures
-253°C (-423.4°F)
-259.15°C (-434.5°F)
0.07 (Air = 1) Liquid Density@BP: 4.43 lb/ft3 (70.96 kg/m3)
-240.15°C (-400.3°F)
2.02 g/mole
Boiling/condensation point
Melting/freezing point
Section 9. Physical and chemical properties
Molecular weight
Critical temperature
Vapor density
Molecular formula H2
Specific Volume (ft 3/lb) : 191.9386
Gas Density (lb/ft 3) : 0.00521
The product is stable.
Extremely reactive or incompatible with the following materials: oxidizing materials.
Under normal conditions of storage and use, hazardous polymerization will not occur.
Under normal conditions of storage and use, hazardous decomposition products should not be produced.
Section 10. Stability and reactivity
Stability and reactivity
Incompatibility with various substances
Hazardous decomposition products
Hazardous polymerization

Section 11. Toxicological information
Specific effects
Carcinogenic effects No known significant effects or critical hazards.
Mutagenic effects No known significant effects or critical hazards.

Reproduction toxicity No known significant effects or critical hazards.
No specific information is available in our database regarding the other toxic effects of this material to humans.
Chronic effects on humans May cause damage to the following organs: lungs.
Other toxic effects on humans
Toxicity data
Section 12. Ecological information
Environmental fate : Not available.
Environmental hazards : No known significant effects or critical hazards.
Toxicity to the environment : Not available.
Aquatic ecotoxicity
Not available.
Section 13. Disposal considerations
Product removed from the cylinder must be disposed of in accordance with appropriate Federal, State, local regulation.Return cylinders with residual product to Airgas, Inc.Do not dispose of locally.
Section 14. Transport information
2.1 Limited quantity Yes.
Packaging instruction
Passenger aircraft Quantity limitation: Forbidden.
Cargo aircraft Quantity limitation: 150 kg
DOT Classification
TDG Classification 2.1
HYDROGEN, COMPRESSED Hydrogen, refrigerated liquid
UN1049 UN1966
HYDROGEN, COMPRESSED Hydrogen, refrigerated liquid
Regulatory information
UN number Proper shipping name
Class Packing group Label Additional
Information UN1049 UN1966
Explosive Limit and Limited Quantity
Index
0.125
ERAP Index
3000
Passenger Carrying Ship Index Forbidden
Not applicable (gas).
Not applicable (gas).
Passenger
Carrying Road or Rail Index Forbidden
Mexico Classification
UN1049
UN1966
HYDROGEN,
COMPRESSED
Hydrogen,
refrigerated liquid
2.1 Not applicable (gas). -
"Refer to CFR 49 (or authority having jurisdiction) to determine the information required for shipment of the product."
Section 15. Regulatory information

U.S. Federal regulations
.Class B-1: Flammable gas.
SARA 302/304/311/312 extremely hazardous substances: No products were found.
SARA 302/304 emergency planning and notification: No products were found.
SARA 302/304/311/312 hazardous chemicals: hydrogen
SARA 311/312 MSDS distribution - chemical inventory - hazard identification:
hydrogen: Fire hazard, Sudden release of pressure
Canada
United States
Hydrogen
Clean Air Act (CAA) 112 accidental release prevention - Flammable Substances:
Section 16. Other information
3
4
0
0
4
Health 3
Special
Instability
Flammability
Health
Fire hazard
Reactivity
Personal protection
GAS:
CONTENTS UNDER PRESURE.
Extremely flammable
Do not puncture or incinerate container.
Can cause rapid suffocation.
May cause severe frostbite.
LIQUID:
Extremely flammable
Extremely cold liquid and gas under pressure.
Can cause rapid suffocation.
May cause severe frostbite.
Label requirements : Class A: Compressed gas.
Class B-1: Flammable gas.
United States Canada
0
4
0
National Fire Protection Association (U.S.A.)
0
4
0
Health
Flammability
Physical hazards

Material Safety Data Sheet

NITROGEN, GAS

1. PRODUCT AND COMPANY IDENTIFICATION

Product Name NITROGEN, GAS
Product Code(s) G-7, 1018
UN-Number UN1066
Recommended Use Compressed gas.
Synonyms LASER Nitrogen, LASER Nitrogen Ultra, Nitrogen, compressed
Supplier Address* Linde Gas North America LLC - Linde Merchant Production Inc. - Linde LLC
575 Mountain Ave.
Murray Hill, NJ 07974
Phone: 908-464-8100
www.lindeus.com
Linde Gas Puerto Rico, Inc.
Las Palmas Village
Road No. 869, Street No. 7
Catano, Puerto Rico 00962
Phone: 787-641-7445
www.pr.lindegas.com
Linde Canada Limited
5860 Chedworth Way
Mississauga, Ontario L5R 0A2
Phone: 905-501-1700
www.lindecanada.com
* May include subsidiaries or affiliate companies/divisions.
For additional product information contact your local customer service.
Chemical Emergency Phone Number Chemtrec: 1-800-424-9300 for US/ 703-527-3887 outside US

2. HAZARDS IDENTIFICATION

OSHA Regulatory Status This material is considered hazardous by the OSHA Hazard Communication Standard (29 CFR
1910.1200).
Potential Health Effects
WARNING!

Emergency Overview

Simple asphyxiant
Contents under pressure
Keep at temperatures below 52°C / 125°F
Appearance Colorless **Physical State** Compressed gas. **Odor** Odorless

Principle Routes of Exposure Inhalation.

Acute Toxicity
Chronic Effects None known
Aggravated Medical Conditions None known.
Environmental Hazard See Section 12 for additional Ecological Information.

3. COMPOSITION/INFORMATION ON INGREDIENTS

Chemical Name CAS-No Volume % Chemical Formula
Nitrogen 7727-37-9 >99 N_2

4. FIRST AID MEASURES

Eye Contact None required for gas. If frostbite is suspected, flush eyes with cool water for 15 minutes and obtain immediate medical attention.
Skin Contact None required for gas. For dermal contact or suspected frostbite, remove contaminated clothing and flush affected areas with lukewarm water. DO NOT USE HOT WATER. A physican should see the patient promptly if contact with the product has resulted in blistering of the dermal surface or in deep tissue freezing.
Inhalation PROMPT MEDICAL ATTENTION IS MANDATORY IN ALL CASES OF INHALATION OVEREXPOSURE. RESCUE
PERSONNEL SHOULD BE EQUIPPED WITH SELF-CONTAINED BREATHING APPARATUS. Conscious inhalation victims should be assisted to an uncontaminated area and inhale fresh air. If breathing is difficult, administer oxygen. Unconscious persons should be moved to an uncontaminated area and, as necessary, given artificial resuscitation and supplemental oxygen. Treatment should be symptomatic and supportive.
Ingestion None under normal use. Get medical attention if symptoms occur.
Notes to Physician Treat symptomatically.

5. FIRE-FIGHTING MEASURES

Inhalation
Skin This product is a gas at room temperature. Contact with liquid may cause frostbite.
Simple asphyxiant. May cause suffocation by displacing the oxygen in the air. Exposure to oxygen-deficient atmosphere (<19.5%) may cause dizziness, drowsiness, nausea, vomiting, excess salivation, diminished mental alertness, loss of consciousness and death. Exposure to atmospheres containing 8-10% or less oxygen will bring about unconsciousness without warning and so quickly that the individuals cannot help or protect themselves. Lack of sufficient oxygen may cause serious injury or death.
Skin Absorption Hazard No known hazard in contact with skin.
Ingestion Not an expected route of exposure.
Eyes This product is a gas at room temperature. Contact with liquid may cause frostbite.

Flammable Properties Not flammable.
Suitable Extinguishing Media Use extinguishing measures that are appropriate to local circumstances and the surrounding
environment.
Explosion Data
Sensitivity to Mechanical Impact None
Sensitivity to Static Discharge None
Specific Hazards Arising from the Chemical
Cylinders may rupture under extreme heat. Continue to cool fire exposed cylinders until flames are extinguished. Damaged cylinders should be handled only by specialists.
Protective Equipment and Precautions for Firefighters
As in any fire, wear self-contained breathing apparatus pressure-demand, MSHA/NIOSH (approved or equivalent) and full protective gear.

6. ACCIDENTAL RELEASE MEASURES

Personal Precautions Ensure adequate ventilation. Evacuate personnel to safe areas. Use personal protective equipment.
Monitor oxygen level.
Environmental Precautions Prevent spreading of vapors through sewers, ventilation systems and confined areas.
Methods for Containment Stop the flow of gas or remove cylinder to outdoor location if this can be done without risk. If leak is
in container or container valve, contact the appropriate emergency telephone number in Section 1
or call your closest Linde location.
Methods for Cleaning Up Return cylinder to Linde or an authorized distributor.

7. HANDLING AND STORAGE

Handling Use only in ventilated areas. Never attempt to lift a cylinder by its valve protection cap. Protect cylinders from physical damage; do not drag, roll, slide or drop. When moving cylinders, even for short distance, use a cart designed to transport cylinders. Use equipment rated for cylinder pressure. Use backflow preventive device in piping. Never insert an object (e.g. wrench, screwdriver, pry bar,etc.) into valve cap openings. Doing so may damage valve, causing leak to occur.
Use an adjustable strap wrench to remove over-tight or rusted caps. Close valve after each use and when empty. If user experiences any difficulty operating cylinder valve discontinue use and contact supplier.
Never put cylinders into trunks of cars or unventilated areas of passenger vehicles. Never attempt to refill a compressed gas cylinder without the owner's written consent. Never strike an arc on a compressed gas cylinder or make a cylinder a part of an electrical circuit.
For additional recommendations consult Compressed Gas Association's (CGA) Safety Bulletin SB-2, Oxygen-Deficient Atmospheres.
For additional handling recommendations, consult Compressed Gas Association's pamphlets P-1, G-10.1, P-8.1, P-8.2, P-9, P-16, P-18, and Safety Bulletin SB-2.

Storage Protect from physical damage. Cylinders should be stored upright with valve protection cap in place and firmly secured to prevent falling. Store in cool, dry, well-ventilated area of non-combustible construction away from heavily trafficked areas and emergency exits. Keep at temperatures below 52°C / 125°F. Full and empty cylinders should be segregrated. Use a "first in-first out" inventory system to prevent full cylinders from being stored for excessive periods of time. Always store and handle compressed gas cylinders in accordance with Compressed Gas Association, pamphlet CGA-P1, Safe Handling of Compressed Gases in Containers.

8. EXPOSURE CONTROLS / PERSONAL PROTECTION

Exposure Guidelines This product does not contain any hazardous materials with occupational exposure limits established by the region specific regulatory bodies.
Engineering Measures Showers. Eyewash stations. Ventilation systems. Local exhaust ventilation to prevent accumulation
of high concentrations and maintain air-oxygen levels at or above 19.5%.
Ventilation Ensure adequate ventilation, especially in confined areas.
Personal Protective Equipment
Eye/Face Protection If splashes are likely to occur, wear: Goggles. Face-shield.
Skin and Body Protection Wear cold insulating gloves when handling liquid. Work gloves and safety shoes are recommended
when handling cylinders.
Respiratory Protection
General Use No special protective equipment required.
Emergency Use Use positive pressure airline respirator with escape cylinder or self contained breathing apparatus for oxygen-deficient atmospheres (<19.5%).
Hygiene Measures Wear suitable gloves and eye/face protection.

10. STABILITY AND REACTIVITY

9. PHYSICAL AND CHEMICAL PROPERTIES

-195.8 °C / -320.4 °F
Appearance
Freezing Point -209.9 °C / -345.9 °F **Molecular Weight** 28.01
Odor Threshold
Water Solubility Very slight
No information available
Evaporation Rate No information available
Colorless.
Vapor Pressure No data available. **Vapor Density** 0.97 (air = 1)
Physical State
Gas Density 0.072 lb/ft³ (1.153 kg/m³) (@
21.1°C)
Compressed gas
VOC Content (%) Not applicable.
Specific Vol.@21.1°C & 1 atm 13.8 ft³/lb (0.867 m³/kg) **Critical Pressure** 492.9 psia (3399 kPa abs)
Flash Point No information available. **Autoignition Temperature** No information available.
Odor
Decomposition Temperature No information available.
Odorless.
Boiling Point/Boiling Range
Lower Not applicable
Upper Not applicable
Flammability Limits in Air

Stability Stable.
Incompatible Products None known.
Conditions to Avoid None known.
Hazardous Decomposition Products None known.
Hazardous Polymerization Hazardous polymerization does not occur.

11. TOXICOLOGICAL INFORMATION

Acute Toxicity
LD50 Oral: No information available.
LD50 Dermal: No information available.
LC50 Inhalation: No information available.
Inhalation Product is a simple asphyxiant.
Repeated Dose Toxicity No information available.
Chronic Toxicity
Chronic Toxicity None known.
Carcinogenicity Contains no ingredient listed as a carcinogen.
Irritation No information available.
Sensitization No information available.
Reproductive Toxicity No information available.
Developmental Toxicity Oxygen deficiency during pregnancy has produced developmental abnormalities in humans and
experimental animals.
Synergistic Materials None known.
Target Organ Effects None known.

12. ECOLOGICAL INFORMATION

Ecotoxicity
The environmental impact of this product has not been fully investigated.
Ozone depletion potential; ODP; (R-11 = 1): Does not contain ozone depleting chemical (40 CFR Part 82).

---

13. DISPOSAL CONSIDERATIONS

Waste Disposal Methods Do not attempt to dispose of residual waste or unused quantities. Return in the shipping container
PROPERLY LABELED WITH ANY VALVE OUTLET PLUGS OR CAPS SECURED AND VALVE PROTECTION CAP IN PLACE to Linde for proper disposal.

14. TRANSPORT INFORMATION

DOT
Proper shipping name Nitrogen, compressed
Hazard Class 2.2
Subsidiary Class None
UN-Number UN1066
Description UN1066,Nitrogen, compressed,2.2
Emergency Response Guide Number 121
TDG
Proper Shipping Name Nitrogen, compressed
Hazard Class 2.2
UN-Number UN1066
Description UN1066,NITROGEN, COMPRESSED,2.2
MEX
Proper Shipping Name Nitrogen, compressed
Hazard Class 2.2
UN-Number UN1066
Description UN1066, Nitrogen, compressed,2.2
IATA
UN-Number UN1066
Proper Shipping Name Nitrogen, compressed
Hazard Class 2.2
ERG Code 2L
Description UN1066,Nitrogen, compressed,2.2
Maximum Quantity for Passenger 75 kg
Maximum Quantity for Cargo Only 150 kg
Limited Quantity No information available.
IMDG/IMO
Proper Shipping Name Nitrogen, compressed
Hazard Class 2.2
UN-Number UN1066
EmS No. F-C, S-V
Description UN1066, Nitrogen, compressed,2.2
ADR
Proper Shipping Name Nitrogen, compressed
Hazard Class 2.2
UN-Number UN1066
Classification Code 1A

Description UN1066, Nitrogen, compressed,2.2

15. REGULATORY INFORMATION

International Inventories
Legend
U.S. Federal Regulations
SARA 313
Section 313 of Title III of the Superfund Amendments and Reauthorization Act of 1986 (SARA). This product does not contain any
chemicals which are subject to the reporting requirements of the Act and Title 40 of the Code of Federal Regulations, Part 372.
SARA 311/312 Hazard Categories

Acute Health Hazard No
Chronic Health Hazard No
Fire Hazard No
Sudden Release of Pressure Hazard Yes
Reactive Hazard No
Clean Water Act
This product does not contain any substances regulated as pollutants pursuant to the Clean Water Act (40 CFR 122.21 and 40 CFR 122.42).
Risk and Process Safety Management Programs
This material, as supplied, does not contain any regulated substances with specified thresholds under 40 CFR Part 68.
This product does not contain any substances regulated as Highly Hazardous Chemicals pursuant to the 29 CFR Part 1910.110.
Clean Air Act, Section 112 Hazardous Air Pollutants (HAPs) (see 40 CFR 61)
This product does not contain any substances regulated as hazardous air pollutants (HAPS) under Section 112 of the Clean Air Act
Amendments of 1990.
CERCLA/SARA
This material, as supplied, does not contain any substances regulated as hazardous substances under the Comprehensive Environmental
Response Compensation and Liability Act (CERCLA) (40 CFR 302) or the Superfund Amendments and Reauthorization Act (SARA) (40 CFR
355). There may be specific reporting requirements at the local, regional, or state level pertaining to releases of this material.
U.S. State Regulations
California Proposition 65
This product does not contain any Proposition 65 chemicals.
EINECS/ELINCS
TSCA - United States Toxic Substances Control Act Section 8(b) Inventory
Complies
DSL/NDSL - Canadian Domestic Substances List/Non-Domestic Substances List
EINECS/ELINCS - European Inventory of Existing Commercial Chemical Substances/EU List of Notified Chemical Substances
TSCA Complies
DSL Complies
NITROGEN, GAS , Material Safety Data Sheet **,** Revision Date 24-Sep-2013 **,** Page 8 / 8

U.S. State Right-to-Know Regulations
Chemical Name Massachusetts New Jersey Pennsylvania Illinois Rhode Island
Nitrogen X X X - X
International Regulations
Canada
This product has been classified in accordance with the hazard criteria of the Controlled Products Regulations (CPR) and the MSDS
contains all the information required by the CPR.
WHMIS Hazard Class
A Compressed gases
Prepared By Product Stewardship
23 British American Blvd.
Latham, NY 12110
1-800-572-6501
Issuing Date 05-Mar-2010
Revision Date 24-Sep-2013
Revision Number 2
Revision Note Not applicable.

Note: Ratings were assigned in accordance with Compressed Gas Association (CGA) guidelines as published in CGA Pamphlet P-19-2009,
CGA Recommended Hazard Ratings for Compressed Gases, 3rd Edition.

General Disclaimer
For terms and conditions, including limitation of liability, please refer to the purchase agreement in effect between Linde LLC, Linde Merchant
Production, Inc. or Linde Gas North America LLC (or any of their affiliates and subsidiaries) and the purchaser.
DISCLAIMER OF EXPRESSED AND IMPLIED WARRANTIES
Although reasonable care has been taken in the preparation of this document, we extend no warranties and make no representations as to the
accuracy or completeness of the information contained herein, and assume no responsibility regarding the suitability of this information for the user's
intended purposes or for the consequences of its use. Each individual should make a determination as to the suitability of the information for their
particular purpose(s).

End of Safety Data Sheet

Personal Protection -
NFPA Physical and Chemical
Hazards Simple asphyxiant
Health Hazard 0
HMIS Health Hazard 0
Flammability 0
Flammability 0 **Physical Hazard** 3
Stability 0

Material Safety Data Sheet

MSDS Revision Date: 12/17/2007
Page 1 of 7

BRENNTAG

1. Product Identification

Product Identity: Ammonium Hydroxide Solutions (10%-30%)
Molecular Weight: 35.05 (NH4OH)
Chemical Formula: NH4OH + H2O

Technical Information: 270-830-1200
Emergency Number: 800-424-9300
(CHEMTREC)

Synonyms: Aqua Ammonia greater than 10% and less than 30%; Aqua ammonia 15.8 to 26°Be.(all grades)

Distributed By Brenntag

Brenntag Great Lakes LLC.
4420 N. Harley Davidson Ave
Wauwatosa, WI 53225

Brenntag Mid-South Inc.
1405 Hwy 136 W
Henderson, KY 42420

Brenntag Northeast, Inc.
81 West Huller Lane
Reading, PA 19605

Brenntag Southeast, Inc.
2000 East Pettigrew Street
Durham, NC 27703

Brenntag Southwest, Inc.
610 Fisher Road
Longview, TX 75604

Brenntag Pacific, Inc.
10747 Patterson Place
Santa Fe Springs, CA 90670

2. Hazards Identification

Emergency Overview

DANGER!
POISON! DANGER! CORROSIVE, ALKALINE SOLUTION. CAUSES BURNS TO ANY AREA OF CONTACT. HARMFUL IF SWALLOWED, INHALED OR ABSORBED THROUGH SKIN.

Potential Health Effects

Inhalation:

Exposure by inhalation can cause irritation of the nose, throat, and mucous membranes. Exposure to high concentrations of ammonia vapor (above approximately 2500ppm) is life threatening, causing severe damage to the respiratory tract and resulting in bronchitis Chemical pneumonitis, and pulmonary edema, which can be fatal. Chronic exposure to ammonia can cause respiratory irritation and damage

Skin Contact:

Skin contact can result in severe irritation, blister formation and burns; contact with the liquid results in cryogenic burns as well.

Eye Contact:

Eye contact with ammonia vapor is severely irritating, and exposure of the eyes to ammonium hydroxide can result in serious damage and may cause permanent eye injury and blindness. Tearing or edema may occur.

3. Composition/Information on Ingredients

CAS#	Chemical Name	Percent by Weight
1336-21-6	Ammonium Hydroxide	10-30%
7732-18-5	Water	70-90

4. First Aid Measures

Inhalation:

If a person breathes in chemical, remove exposed person promptly to fresh air. If breathing has stopped, perform artificial respiration. Oxygen should be provided for a person having difficulty breathing (but only administered by an authorized individual) until the person is able to breath easily by themselves. Keep the affected person warm and at rest. Get medical attention as soon as possible.

.

Ingestion:

If conscious, give large amounts of water. DO NOT induce vomiting. Get medical attention immediately. If vomiting occurs spontaneously, keep head below hips. May drink orange juice or diluted vinger (1: 4) to counteract ammonia.

Skin Contact:

Promptly wash the contaminated skin using soap or mild detergent and water. If chemical, or solution containing chemical, soaks through clothing, remove the clothing promptly and wash the skin using soap or mild detergent and water. Medical attention should be given as soon as possible for all burns, regardless of how minor they seem.

Eye Contact:

Flush eyes with large amounts of water, lifting the upper and lower lids at periodic intervals to insure contact of water with all accessible tissue of the eyes and lids. Medical attention should be given as soon as possible, preferably an eye specialist.

5. Fire Fighting Measures

Go to Section 9 for Flammable Properties.

Fire:

Not considered to be a fire hazard. The mixture will not burn, but escaping ammonia gas can burn in the range of 16-25% in air.
LEL / UEL = 15 – 28%

Explosion:

Not considered to be an explosion hazard. When heated, will give off ammonia gas. Ammonia increases the fire hazards from other combustible materials, including oil. Flammable limits are broadened by increasing temperature. Ammonia vapor in the rate of 16 - 25% in air can explode on contact with ignition sources. Closed containers exposed to extreme heat may build up pressure and rupture violently. Combustion of released ammonia may form nitrogen oxides.

Fire Extinguishing Media:

Use any means suitable for extinguishing surrounding fire. Water spray or fog may be used for escaping ammonia gas and to cool ammonia containers.

Special Considerations:

Firefighters should avoid all bodily contact; wear full protective clothing and self-contained breathing apparatus in positive pressure mode. When this product is heated to combustion it will release ammonia which could form nitrogen oxides.

6. Accidental Release Measures

Ventilate area of leak or spill. Wear appropriate personal protective equipment. Pick up and place in a suitable container for reclamation or disposal, using a method that does not generate fumes. Use copious amounts of water spray or fog to absorb the evolved gas. Stay upwind when containers are threatened. Contain spill and runoff from entering drains, sewers, and water systems by utilizing methods such as diking, containment, and absorption. US Regulations (CERCLA) require reporting spills and releases to soil, water and air in excess of reportable quantities. The toll free number for the US Coast Guard National Response Center is (800) 424-8802.

7. Handling and Storage

Keep containers tightly closed. Store in a cool, dry place. Use only with adequate ventilation, dust mask or self-contained breathing apparatus. Protective clothing should always be worn. Avoid contact with eyes, skin, and clothing. Keep container closed when not in use. Avoid breathing mist. Do not get on skin, clothing, or in eyes. Wash off with water. Do not take internally. Open container slowly in case of pressure build-up. Ammonia hydroxide will react exothermically with acid.

8. Exposure Controls/Personal Protection

OSHA Permissible Exposure Limit (PEL): 35 ppm (STEL)

ACGIH Threshold Limit Value (TLV): 25 PPM (TLV) 35 PPM (STEL)

Ventilation System:

A system of local and/or general exhaust is recommended to keep employee exposures below the Airborne Exposure Limits. Local exhaust ventilation is generally preferred because it can control the emissions of the contaminant at its source, preventing dispersion of it into the general work area. Please refer to the ACGIH document, *Industrial Ventilation, a Manual of Recommended Practices*, most recent edition, for details. Personal Respirators (NIOSH Approved): If the exposure limit is exceeded and engineering controls are not feasible, a full-face piece particulate respirator (NIOSH type NI00 filters) may be worn for exposure limit, or the maximum use concentration specified by the appropriate regulatory agency, or respirator supplier, whichever is lowest. For emergencies or instances where the exposure levels are not known, use a full-face piece positive-pressure, air-supplied respirator. WARNING: Air-purifying respirators do not protect workers in oxygen-deficient atmospheres.

Skin Protection:

Impervious rubber or neoprene gloves should be worn. Protective, impervious clothing should be worn in presence to prevent contact with skin (coveralls, boots, etc.).

Eye Protection:

Splash-proof goggles and full face shield should be worn when there is danger of splash from solution containing chemical. Protection against splash or mist from solution containing chemical with 8-inch minimum face shield is recommended. Eye protection should be worn in presence of solution containing chemical, at all times. Maintain eye wash fountain and quick-drench facilities in work area.

9. Physical and Chemical Properties

Appearance:	Clear colorless liquid
Odor:	strong pungent (ammonia) odor
Physical State:	liquid
PH of water solutions:	13+
Melting Point:	N/A
Boiling Point:	27.8 - 59.5℃ (82-139F)
Flash Point:	N/A
Upper Explosive Limit:	N/A
Lower Explosive Limit:	N/A
Vapor Pressure:	(60F) 420 – 475 FOR 29.7% NH3
Vapor Density:	0.596
Specific Gravity:	*0.89-0.96*
Solubility in Water:	100% Soluble in Water

10. Stability and Reactivity

Chemical Stability: Stable under normal conditions of use and storage.

Conditions to Avoid: Heat, exposure to high temperature should be minimized. This material should avoid direct sunlight.

Incompatible Materials: Contact with strong acids and alkalis, chlorine bleach, halogems, strong hydroxide, iron, reactive metals, mercury, gold, silver and strong oxidizers.

Hazardous Decomposition Products: Hydrogen and nitrogen gases. Gaseous ammonia upon heating.

11. Toxicological Information

LD50 Inhalation Rat: 2000 ppm/4hr
LD50 Oral Rat: 350 mg/kg
LD50 Oral mouse: 4837mg/kg

Acute: POISON! DANGER! CORROSIVE, ALKALINE SOLUTION. CAUSES BURNS TO ANY AREA OF CONTACT. HARMFUL IF SWALLOWED, INHALED OR ABSORBED THROUGH SKIN.

Exposure by inhalation can cause irritation of the nose, throat, and mucous membranes.
Exposure to high concentrations of ammonia vapor (above approximately 2500ppm) is life threatening, causing severe damage to the respiratory tract and resulting in bronchitis Chemical pneumonitis, and pulmonary edema, which can be fatal
Chronic exposure to ammonia can cause respiratory irritation and damage
Ingestion of ammonium hydroxide burns the mouth, throat, and gastrointestinal tract and can lead to severe abdominal pain, nausea, vomiting, and collapse. Ingestion of as little as 3-4 ml of ammonium hydroxide may be fatal.
Skin contact can result in severe irritation and burns; contact with the liquid results in cryogenic burns as well.
Eye contact with ammonia vapor is severely irritating, and exposure of the eyes to ammonium hydroxide can result in serious damage and may cause permanent eye injury and blindness.

Chronic: Ingestion of as little as 3-4 ml of ammonia hydroxide may be fatal. Investigated as a tumorigen and mutagen.

12. Ecological Information

ENVIRONMENTAL FATE: No data found

ENVIRONMENTAL TOXICITY: LC50 Daphnia magna 0.66 mg/l/48 hr 22℃; LC50 Perch 0.29 mg/l/7days/un-ionized NH3; LC50 Salmon gairdnerli 8 ug/ml NH3/24 hr

13. Disposal Considerations

Whatever cannot be saved for recovery or recycling should be managed in an appropriate and approved waste disposal facility. Processing, use or contamination of this product may change the waste management options. State and local disposal regulations may differ from federal disposal regulations. Dispose of container and unused contents in accordance with federal, state and local requirements.

14. Transport Information

US DOT (ground)
Proper Shipping Name: Ammonia Solution
Hazard Class: 8
UN/NA: UN2672
Packing Group: III
Marine Pollutant: No
RQ Amount: 1,000 lbs

IMDG (water)
Proper Shipping Name: Ammonia Solution

Hazard Class: 8
UN/NA: UN2672
Packing Group: III
Marine Pollutant: No
RQ Amount: 1,000 lbs

15. Regulatory Information

SARA 302	SARA 304	SARA 313	CERCLA	TSCA Inventory
Not Listed	Not Listed	Not Listed	Listed 1,000lbs	Yes

California Proposition 65
Not Listed

16. Other Information

This MSDS is provided as an information resource only. It should not be taken as a warranty or representation for which Brenntag assumes legal liability. While Brenntag believes the information contained herein is accurate and compiled from sources believed to be reliable, it is the responsibility of the user to investigate and verify its identity. The buyer assumes all responsibility for using and handling the product in accordance with applicable federal, state, and local regulations.

Distributed By Brenntag

Brenntag Great Lakes LLC.
4420 N. Harley Davidson Ave
Wauwatosa, WI 53225

Brenntag Mid-South Inc.
1405 Hwy 136 W
Henderson, KY 42420

Brenntag Northeast, Inc.
81 West Huller Lane
Reading, PA 19605

Brenntag Southeast, Inc.
2000 East Pettigrew Street
Durham, NC 27703

Brenntag Southwest, Inc.
610 Fisher Road
Longview, TX 75604

Brenntag Pacific, Inc.
10747 Patterson Place
Santa Fe Springs, CA
90670

SOLUTION-SPECIFIC PHYSICAL DATA

	20.5° Baume	25° Baume	26° Baume
AMMONIA %	18.5-19.5%	26.5-27.5%	29.0-29.9%
WATER %	81.5-80.5%	73.5-72.5%	71.0-70.1%
SPECIFIC GRAVITY	0.9341-09276 @60F	0.9061-9032@60F	0.8974-0.8960@60F
BOILING POINT	124°F@14.7psis	88°F @14.7psis	84.9°F @14.7psis
VAPOR PRESSURE	3.9 psis @ 60°F	6.9 @ 60°F	9.1 @ 60°F
APPROX. FREEZING POINT	-32°F	-89°F	-110°F

MATERIAL SAFETY DATA SHEET

BRENNTAG

Brenntag MSDS #:	BPI-00180
MSDS Revision/Issue Date:	07/26/07
Supercedes Revision Date:	New

NFPA 704 DESIGNATION
HAZARD RATING

4=Extreme
3=High
2=Moderate
1=Slight
0=Insignificant

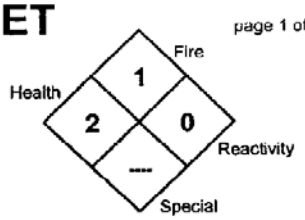

1. CHEMICAL PRODUCT IDENTIFICATION & COMPANY IDENTIFICATION

PRODUCT IDENTIFIER: Citric Acid 50% Solution (All Grades)

GENERAL USE: Used as an acidulant in beverages, to adjust the pH of foods, as synergistic antioxidant in processing cheese, as a foam inhibitor, and as a sequestering agent to remove trace metals.

PRODUCT DESCRIPTION: An aqueous solution of an aliphatic acid. Synonyms include: beta-hydroxytricarboxylic acid, and 2-hydroxy-1,2,3-propanetricarboxylic acid.

INFORMATION PROVIDED BY:
Brenntag Pacific, Inc.
5700 N.W. Front Avenue
Portland, OR 97210

For MSDS call: PHONE: 503-242-0200

EMERGENCY PHONE NUMBERS

BRENNTAG:	503-699-7055
CHEMTREC:	800-424-9300
CANUTEC:	613-996-6666

2. COMPOSITION & INFORMATION ON INGREDIENTS

COMPONENT	CAS #	OSHA HAZARD	WT %	ACGIH TLV(TWA)	ACGIH STEL	OSHA PEL(TWA)	OSHA STEL
Citric Acid	77-92-9	Severe Eye & Respiratory Irritant; Skin Irritant	50 ± 2	None	None	None	None

NDA = No Data Available N/A = Not Applicable

3. HAZARDS IDENTIFICATION

EMERGENCY OVERVIEW: A clear, colorless to light yellow, strongly acidic liquid having no characteristic odor. This product can cause severe irritation or burns to the eyes. It may cause moderate to severe irritation to the skin and respiratory tract.

POTENTIAL HEALTH EFFECTS

INHALATION: Inhalation of mists or aerosols may cause severe irritation to the nose, mouth, throat, mucous membranes and lungs. Symptoms of exposure may include sneezing, coughing, chest discomfort or pain and shortness of breath. Inhalation of high mist concentrations may result in permanent lung damage.

EYE CONTACT: Exposure to the mists or liquid can cause severe eye irritation. Symptoms of exposure may include tearing, redness, swelling and a painful burning sensation. Corneal damage with impairment of vision may result from direct contact with the liquid, unless promptly treated.

SKIN CONTACT: Exposure to the mists or liquid may cause moderate to severe skin irritation. Symptoms of exposure may include redness, swelling, a stinging sensation and/or pain. No published reports indicate this product is absorbed through the skin.

INGESTION: Ingestion may cause moderate to severe irritation to the mouth, throat and the entire gastrointestinal tract, including the stomach and intestines, characterized by nausea, vomiting, diarrhea, abdominal pain, possible bleeding and/or tissue ulceration.

CHRONIC: The chronic health effects of exposure to this product are expected to be the same as for acute exposure.

4. FIRST AID MEASURES

INHALATION: If inhaled, immediately move to fresh air. If not breathing, give artificial respiration. Do not use mouth-to-mouth method if victim ingested or inhaled the substance; use the Holger Nielsen method (back pressure-arm lift) or proper respiratory device. If breathing is difficult, give oxygen. Call a physician.

EYE CONTACT: In case of contact, immediately flush eyes with plenty of clean running water for at least 15 minutes, lifting the upper and lower lids occasionally. Remove contact lenses, if worn. Get medical attention immediately.

SKIN CONTACT: In case of contact, immediately flush skin with plenty of clean running water for at least 15 minutes, while removing contaminated clothing and shoes. Then wash with soap and water. If burn or irritation occurs, call a physician.

INGESTION: If swallowed, DO NOT induce vomiting. Get medical attention immediately. If victim is fully conscious, give plenty of water to drink. Never give anything by mouth to an unconscious person.

NOTE TO PHYSICIANS: Treat exposure symptomatically.

5. FIRE FIGHTING MEASURES

Flashpoint and Method: This product does not flash.

Flammable Limits (in air, % by volume) **Lower:** Not applicable **Upper:** Not applicable

Autoignition Temperature: Not applicable

GENERAL HAZARD: This product is an aqueous solution of a non-volatile organic acid having no characteristic odor. The Uniform Fire Code health hazard classification for this product is: **Irritant**. When in contact with some soft metals (i.e. Aluminum), this product can corrode the metal, liberating flammable / explosive Hydrogen gas. This product may produce hazardous mists or hazardous decomposition products.

FIRE FIGHTING INSTRUCTIONS: **EXTINGUISHING MEDIA:** Water fog, CO_2 foam or dry chemicals. Use the extinguishing media that is appropriate to the surrounding fire.

FIRE FIGHTING EQUIPMENT: Fire fighters should wear full protective equipment, including self-contained breathing apparatus.

HAZARDOUS COMBUSTION PRODUCTS: When heated to dryness and decomposition, it emits toxic carbon monoxide and carbon dioxide plus dense, irritating smoke.

6. ACCIDENTAL RELEASE MEASURES

LAND SPILL: Wearing recommended protective equipment and clothing, dike spill using soil, sand or compatible commercial absorbent. Pick up bulk of liquid using pumps or vacuum truck or absorb liquid in sand or commercial absorbent. Place in approved containers for recovery, disposal or satellite accumulation. Neutralize the acidity using soda ash, lime or a suitable agent appropriate for neutralizing acidic liquids. Flush the spill area with water; collect rinsates for disposal or sewer, as appropriate.

WATER SPILL: Wear recommended protective equipment and clothing if contact with hazardous material can occur. Stop or divert water flow. Dike contaminated water and remove for disposal and/or treatment. As appropriate, notify all downstream users of possible contamination.

7. HANDLING AND STORAGE

STORAGE TEMPERATURE: Ambient **STORAGE PRESSURE:** Ambient

GENERAL: Store in a cool, dry, well-ventilated area away from incompatible materials and products. Avoid getting this product in eyes, on skin or on clothing. Wear the recommended personnel protective equipment. Avoid breathing mists or aerosols. Use with adequate ventilation. Keep the container tightly closed when not in use. Wash thoroughly after handling this product.

8. EXPOSURE CONTROLS / PERSONAL PROTECTION

CONTROL MEASURES: Use a local or general, mechanical exhaust ventilation system capable of maintaining mist levels, in the work area, below any level, which may be irritating.

RECOMMENDED PERSONAL PROTECTIVE EQUIPMENT

RESPIRATOR: If use causes an irritating mist, wear a NIOSH-approved respirator equipped with a good mist / particulate cartridge or supplied air.

EYES: Wear chemical goggles (recommended by ANSI Z87.1-1979).

GLOVES: Wear Nitrile, Neoprene, Butyl Rubber, Viton or Natural Rubber gloves.

CLOTHING & EQUIPMENT: Wear a Nitrile, Neoprene, Butyl Rubber or Natural Rubber apron when handling this product. An eye wash station and safety shower should be available in the work area.

FOOTWEAR: Wear Nitrile, Neoprene, Butyl Rubber or Natural Rubber boots, if contact is likely.

9. PHYSICAL AND CHEMICAL PROPERTIES

Appearance:	Clear, colorless to light yellow	**Bulk Density (pounds/ft³):**	Not applicable
Physical State:	Liquid	**Vapor Pressure:**	No data available
Odor:	No characteristic	**Vapor Density (air=1):**	No data available
Odor Threshold:	No data available	**Evaporation Rate (n-Butyl Acetate=1):**	No data available
Molecular Formula:	$C_6H_8O_7$ (in water)	**VOC Content:**	Not applicable
Molecular Weight:	192.14 (in water)	**% Volatile:**	Approximately 50
Boiling Point:	Approximately 104° C. (219° F.)	**Solubility in H_2O:**	Complete
Freezing/Melting Point:	Less than 0° C. (32° F.)	**Octanol/Water Partition Coefficient:**	No data available
Specific Gravity:	Approximately 1.22 @ 20° C.	**pH (as is):**	1.5 – 2.0
Density (pounds/gallon):	Approximately 10.2	**pH (1% solution):**	2.0 – 2.5

10. STABILITY AND REACTIVITY

GENERAL: This product is stable and hazardous polymerization will not occur.

CONDITIONS TO AVOID: Hot storage.

INCOMPATIBLE MATERIAL: Strong oxidizers, caustics & alkali, chlorine releasers, sulfides, sulfites, cyanides, Aluminum, Magnesium, Zinc and alloys of these metals.

HAZARDOUS DECOMPOSITION PRODUCTS: When heated to dryness and decomposition, it emits toxic oxides of carbon plus dense, irritating smoke.

SENSITIVITY TO MECHANICAL IMPACT: This product is not sensitive to mechanical impact.

SENSITIVITY TO STATIC DISCHARGE: This product is not sensitive to static discharge.

PRODUCT IDENTIFIER: **Citric Acid 50% Solution (All Grades)**

11. TOXICOLOGICAL INFORMATION

Components:	Citric Acid
Eye Contact:	Rabbit: 750 ug/24 Hours; Severe
Skin Contact:	Rabbit: 500 mg/24 Hours; Moderate
Oral Rat LD_{50}:	3 gm/kg
Dermal Rabbit LD_{50}:	No data available
Inhalation Rat LC_{50}:	No data available
Human Data:	No data available
Other Toxicological Data:	Intravenous Mouse LD_{50}: 42 mg/kg
Carcinogenicity:	No data available
Teratogenicity:	No data available
Mutagenicity:	No data available
Synergistic Products:	None reported
Target Organs:	Eyes, Skin, Mucous membranes, Lungs & Teeth
Medical Conditions Aggravated By Exposure:	Skin or Respiratory disorders

12. ECOLOGICAL INFORMATION

ENVIRONMENTAL FATE:

The environmental fate of this product is expected to be: **Land:** biodegradation with some leaching into the groundwater. **Water:** biodegradation. **Air:** not expected to volatilize due to low vapor pressure. This product is not expected to bioaccumulate.

ENVIRONMENTAL CONSIDERATIONS:

The aquatic toxicity of this product has not been determined. However the aquatic toxicity of pure Citric Acid is: Goldfish LD_0: 625 mg/liter, longtime exposure in hard water. Goldfish LD_{100}: 894 mg/liter, longtime exposure in hard water.

13. DISPOSAL CONSIDERATIONS

RCRA 40 CFR 261 CLASSIFICATON: Corrosive Waste

U.S. EPA WASTE NUMBER/DESCRIPTION: D002

If this product is disposed of as shipped, it meets the criteria of a hazardous waste as defined under 40 CFR 261 due to its corrosivity. If this product becomes a waste, it will be a hazardous waste which is subject to the Land Disposal Restrictions under 40 CFR 268 and must be managed accordingly. As a hazardous liquid waste, it must be disposed of in accordance with local, state and federal regulations in a permitted hazardous waste treatment, storage and disposal facility.

14. TRANSPORTATION INFORMATION

DOT PROPER SHIPPING NAME: **Not Restricted (See Other Shipping Information)**

Hazard Class: Not applicable **UN Number:** Not applicable **Packing Group:** Not applicable

Primary Label: None Required **Subsidiary Label(s):** None Required

Primary/Subsidiary Placards: None Required

DOT Reportable Quantity (RQ): Not listed **RQ for Product:** Not applicable

Marine Pollutant: No

2004 North American Emergency Response Guidebook No.: **Not applicable (in U.S.); 154 (Outside U.S.)**

TDG PROPER SHIPPING NAME: **CORROSIVE LIQUID, ACIDIC, ORGANIC, N.O.S.** (Contains Citric Acid)

Hazard Class: 8 **UN Number:** UN3265 **Packing Group:** III

Primary Label: Corrosive **Subsidiary Label(s):** None Required

Primary/Subsidiary Placards: Corrosive

TDG Reportable Quantity (RQ): # At least 5 kg or 5 liters.

TDG Schedule XII: Not listed

Regulated Limit (RL): ## Not listed **RL for Product:** Not applicable

Other Shipping Information: DOT exception taken for materials only corrosive to Aluminum and mild steel; 49 CFR 173.154 (d) (1) and (2), when shipped by ground.

\# Canadian Transportation of Dangerous Goods Regulations (TDGR), Part IX, Table I, Quantities or levels for Immediate Reporting: releases of reportable quantities, RQ, that meet the definition of a "dangerous occurrence" (a threat to life, health, property, or the environment) must be reported to the appropriate authorities as outlined in TDGR 9.13(1) and 9.14(1).

\## Reporting to Environment Canada is required for any releases exceeding the regulated limits, RL, of 9.2 materials (primary or secondary). The regulated limits are found in Schedule XIII of the TDGR.

15. REGULATORY INFORMATION

COMPONENTS: Citric Acid

OSHA Target Organs: Eyes, Skin, Mucous membranes, Lungs & Teeth

Carcinogenic Potential:

- **Regulated by OSHA:** No
- **Listed on NTP Report:** No
- **Listed by IARC:** No
- IARC Group: Not applicable
- **ACGIH Appendix A:** Not listed
- A1 Confirmed Human: Not applicable
- A2 Suspected Human: Not applicable

U.S. EPA Requirements

Release Reporting

CERCLA (40 CFR 302)

- **Listed Substance:** Not listed
- Reportable Quantity: Not applicable
- Category: Not applicable
- RCRA Waste No.: Not applicable
- **Unlisted Substance:** Yes
- Reportable Quantity: 100 pounds
- Characteristic: Corrosivity
- RCRA Waste No.: D002

SARA TITLE III

Section 302 & 303 (40 CFR 355):

- **Listed Substance:** Not listed
- Reportable Quantity: Not applicable
- Planning Threshold: Not applicable

Section 311 & 312 (40 CFR 370):

- Hazard Categories (product): **Fire: N** **Sudden Release of Pressure: N** **Reactive: N** **Acute Health: Y** **Chronic Health: N**
- Planning threshold: 10,000 pounds

Section 313 (40 CFR 372):

- **Listed Toxic Chemical:** Not listed
- Reporting Threshold: Not applicable

U.S. TSCA Status

- **Listed** (40 CFR 710): Yes

State Regulations

State of California: Safe Drinking Water and Toxins Enforcement Act, 1986 (Proposition 65):

- Carcinogen: No
- Reproductive Toxin: No

Other Regulations

- **State Right To Know Laws:** None known

Canadian Regulations

Product Information:

- Controlled Product: **Yes**
- WHMIS Hazard Symbols: **Corrosive Material**
- WHMIS Class & Division: **E**

Ingredient Information:

- IDL Substance: Yes
- DSL or NDSL Lists: DSL

PRODUCT IDENTIFIER: **Citric Acid 50% Solution (All Grades)**

16. OTHER INFORMATION

EPA Registration number: Not applicable

Approved Product Uses: Not applicable

Special Notes:

This product does not contain any material, which the State of California has found to cause cancer and/or birth defects or other reproductive harm.

Special Instructions:

When making solutions, always add this product to water with adequate mixing to ensure a uniform solution.

Do not mix this product with strong caustic or alkaline solutions as violent boiling or spattering may result.

Do not add Citric Acid 50% Solution to hypochlorite bleaches, chlorine sanitizers or chlorinated cleaners as this liberates toxic, corrosive Chlorine gas.

MSDS Revision Information: Information Revised This Issue Date: **New MSDS format with additional information.**

Form Revision made 2/03/06

MSDS Distributed by: Brenntag Pacific, Inc.

NW Environmental Department

Phone: 503-242-0200 FAX: 503-412-3390

Prepared By:	Edward Doheny	Date Prepared:	July 26, 2007

This Material Safety Data Sheet is provided as an information resource only. It should not be taken as a warranty or representation for which Brenntag Pacific, Inc. assumes legal responsibility. While Brenntag Pacific, Inc. believes the information contained herein is accurate and compiled from sources believed to be reliable, it is the responsibility of the user to investigate and verify its validity. The buyer assumes all responsibility of using and handling the product in accordance with applicable federal, state, and local regulations.

Monday, October 28, 2013

MATERIAL SAFETY DATA SHEET

BRENNTAG

Brenntag MSDS #:	BPI-00182
MSDS Revision/Issue Date:	07/31/07
Supercedes Revision Date:	New

NFPA 704 DESIGNATION
HAZARD RATING

4=Extreme
3=High
2=Moderate
1=Slight
0=Insignificant

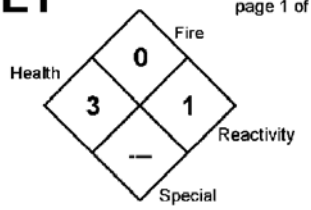

1. CHEMICAL PRODUCT IDENTIFICATION & COMPANY IDENTIFICATION

PRODUCT IDENTIFIER: **Sodium Hydroxide 50% Solution (All Grades)**

GENERAL USE: Used in industry to neutralize acids; to precipitate alkaloids; in metal finishing; in cleaners; and to precipitate most metals (as hydroxides) from aqueous solutions.

PRODUCT DESCRIPTION: An aqueous solution of Sodium Hydroxide. Synonyms for Sodium Hydroxide include: caustic soda, lye soda, sodium hydrate and white caustic.

INFORMATION PROVIDED BY:
Brenntag Pacific, Inc.
5700 N.W. Front Avenue
Portland, OR 97210

For MSDS call: **PHONE: 503-242-0200**

EMERGENCY PHONE NUMBERS

BRENNTAG:	503-699-7055
CHEMTREC:	800-424-9300
CANUTEC:	613-996-6666

2. COMPOSITION & INFORMATION ON INGREDIENTS

				ACGIH		OSHA	
COMPONENT	CAS #	OSHA HAZARD	WT %	$TLV_{(TWA)}$	STEL	$PEL_{(TWA)}$	STEL
Sodium Hydroxide	1310-73-2	Corrosive; Lung Toxin	50 ± 1	None Ceiling: 2 mg/m^3	None	2 mg/m^3	None

NDA = No Data Available N/A = Not Applicable

3. HAZARDS IDENTIFICATION

EMERGENCY OVERVIEW: A clear to slightly turbid, colorless liquid having no characteristic odor. The mists and liquid are corrosive to all tissues contacted. Inhalation of mists may cause permanent lung damage. This material reacts with water to release a large amount of heat and can react violently with acids and other substances. **The NIOSH I.D.L.H. for Sodium Hydroxide is: 10 mg/m^3.**

POTENTIAL HEALTH EFFECTS

INHALATION: Inhalation of mists or an aerosol can cause severe irritation or burns to the nose, mouth, throat, mucous membranes and lungs. Symptoms of exposure can include coughing, sneezing, choking, shortness of breath, chest pain and impairment of lung function. Inhalation of a high mist concentration may result in permanent lung damage.

EYE CONTACT: Exposure to the mists or liquid can cause severe eye irritation and/or burns. Symptoms of exposure can include tearing redness, swelling, pain and possible mucous discharge. Exposure may cause corneal damage and/or visual impairment even when prompt treatment is provided.

SKIN CONTACT: Exposure to the mists or liquid can cause severe skin irritation and/or burns. Symptoms of exposure may include redness, swelling, pain and possible ulceration. Prolonged skin exposure to this material may cause destruction of the dermis with impairment of the skin, at site of contact, to regenerate. No published data indicates this material is absorbed through the skin.

INGESTION: Ingestion can cause severe irritation and/or burns to the entire gastrointestinal tract, including the stomach and intestines characterized by nausea, vomiting, abdominal pain, bleeding, tissue ulceration and possible diarrhea.

CHRONIC: The chronic health effects of exposure to this material are expected to be the same as for acute exposure.

4. FIRST AID MEASURES

INHALATION: If inhaled, immediately move to fresh air. If not breathing, give artificial respiration. Do not use mouth-to-mouth method if victim ingested or inhaled the substance; use the Holger Nielsen method (back pressure-arm lift) or proper respiratory device. If breathing is difficult, give oxygen. Call a physician.

EYE CONTACT: In case of contact, immediately flush eyes with plenty of clean running water for at least 15 minutes, lifting the upper and lower lids occasionally. Remove contact lenses, if worn. Get medical attention immediately.

SKIN CONTACT: In case of contact, immediately flush skin with plenty of clean running water for at least 15 minutes, while removing contaminated clothing and shoes. If burn or irritation occurs, call a physician.

INGESTION: If swallowed, DO NOT induce vomiting. Get medical attention immediately. If victim is fully conscious, give plenty of water to drink. Never give anything by mouth to an unconscious person.

NOTE TO PHYSICIANS: Sodium Hydroxide has a relatively low oral toxicity, but it can be corrosive to the eyes, skin and mucous membranes. If ingested, consideration should be given to careful endoscopy as stomach or esophageal burns, perforations or strictures may occur. Careful gastric lavage with an endotracheal tube in place should be considered. Treat exposure symptomatically.

5. FIRE FIGHTING MEASURES

Flashpoint and Method: This material does not flash.

Flammable Limits (in air, % by volume) **Lower:** Not applicable **Upper:** Not applicable

Autoignition Temperature: Not applicable

GENERAL HAZARD: The Uniform Fire Code physical hazard classification for this material is: **Water Reactive, Class I.** Direct contact with water causes an exothermic reaction (generation of heat). The Uniform Fire Code health hazard classification for this material is: **Corrosive (Alkaline).** This material may generate flammable / explosive Hydrogen gas on contact with some soft metals (i.e. Aluminum). This material may produce hazardous decomposition products.

FIRE FIGHTING INSTRUCTIONS: **EXTINGUISHING MEDIA:** Foam, CO_2 or dry chemicals.
If water must be used and it can contact this material, it is best to use a water flood technique.

FIRE FIGHTING EQUIPMENT: Fire fighters should wear full protective equipment, including self-contained breathing apparatus.

HAZARDOUS COMBUSTION PRODUCTS: When heated to dryness and decomposition, it emits toxic sodium oxide.

6. ACCIDENTAL RELEASE MEASURES	
LAND SPILL:	Wearing recommended protective equipment and clothing, dike the spill and pick up the bulk of liquid using pumps or a vacuum truck, or absorb the liquid in sand or a commercial absorbent. Place in approved containers for recovery, disposal, or satellite accumulation. Neutralize the alkalinity, of the remaining liquid, using a dilute acid solution appropriate for neutralizing alkaline liquids. Liberally cover the spill area with sodium bicarbonate. Flush the spill area with water; collect the rinsates for disposal or sewer, as appropriate.
WATER SPILL:	Wear recommended protective equipment and clothing if contact with hazardous material can occur. Stop or divert water flow. Dike contaminated water and remove for disposal and/or treatment. As appropriate, notify all downstream users of possible contamination.

7. HANDLING AND STORAGE

STORAGE TEMPERATURE: Ambient **STORAGE PRESSURE:** Ambient

GENERAL: Store in a cool, dry, well-ventilated area away from incompatible materials and products. Do not get this material in eyes, on skin or on clothing. Wear recommended personnel protective equipment. Do not breathe mists or aerosols. Use only with adequate ventilation. Do not take internally. Keep the container tightly closed when not in use. Wash thoroughly after handling.

This material is corrosive to Aluminum, Magnesium, Tin, Zinc and alloys containing these metals, and it will react violently with these metals in powder form.

Considerable heat is generated when this material is mixed with water. Never add water to this material. Always add this material slowly, with constant stirring, to the surface of cool (40 – 50° F.) water. If this material is added too rapidly, or without stirring, and becomes concentrated at the bottom of the mixing vessel, excessive heat may be generated, resulting in dangerous boiling and spattering, and a possible immediate and violent eruption of a highly caustic solution.

8. EXPOSURE CONTROLS / PERSONAL PROTECTION

CONTROL MEASURES: Use a local or general, mechanical exhaust ventilation system capable of maintaining emissions, in the work area, below the OSHA-PEL or ACGIH Ceiling level.

RECOMMENDED PERSONAL PROTECTIVE EQUIPMENT

RESPIRATOR: For exposure above the OSHA-PEL or ACGIH-TLV, wear a NIOSH-approved full facepiece or half mask air-purifying cartridge respirator equipped with a good particulate filter cartridge or supplied air. For exposure to Sodium Hydroxide above 10 mg/m^3, wear a supplied air respirator or a self-contained breathing apparatus (SCBA) operated in the positive pressure mode.

EYES: Wear chemical goggles (recommended by ANSI Z87.1-1979), unless a full facepiece respirator is worn.

GLOVES: Wear Neoprene, Nitrile, Butyl Rubber or Natural Rubber gloves.

CLOTHING & EQUIPMENT: Wear a Neoprene, Nitrile, Butyl Rubber or Natural Rubber apron, or full protective clothing when handling this material. An eye wash station and safety shower should be available in the work area.

FOOTWEAR: Wear Neoprene, Nitrile, Butyl Rubber or Natural Rubber boots.

9. PHYSICAL AND CHEMICAL PROPERTIES

Appearance:	Clear to slightly turbid, colorless	**Bulk Density (pounds/ft^3):**	Not applicable
Physical State:	Liquid	**Vapor Pressure:**	13 mm Hg @ 60° F.
Odor:	No characteristic	**Vapor Density (air=1):**	No data available
Odor Threshold:	No data available	**Evaporation Rate (n-Butyl Acetate=1):**	No data available
Molecular Formula:	NaOH (in water)	**VOC Content:**	Nil
Molecular Weight:	40.00 (in water)	**% Volatile:**	49 – 51
Boiling Point:	Approximately 142.2° C. (288° F.)	**Solubility in H_2O:**	Complete
Freezing/Melting Point:	Approximately 12.2° C. (54° F.)	**Octanol/Water Partition Coefficient:**	No data available
Specific Gravity:	Approximately 1.525 @ 20° C.	**pH (as is):**	14.0
Density (pounds/gallon):	Approximately 12.72	**pH (1% solution):**	13.0 to 14.0

10. STABILITY AND REACTIVITY

GENERAL: This product is stable and hazardous polymerization will not occur.

CONDITIONS TO AVOID: Avoid contact with small amounts of water.

INCOMPATIBLE MATERIAL: Acids and acidic salts, chlorinated or fluorinated hydrocarbons, Acetaldehyde, Acrolein, Chlorine trifluoride, Hydroquinone, Maleic anhydride, Phosphorus pentoxide, Tetrahydrofuran, Aluminum, Magnesium, Tin, Zinc and alloys of these metals.

HAZARDOUS DECOMPOSITION PRODUCTS: When heated to decomposition, it emits toxic oxides of sodium.

SENSITIVITY TO MECHANICAL IMPACT: This material is not sensitive to mechanical impact.

SENSITIVITY TO STATIC DISCHARGE: This material is not sensitive to static discharge.

11. TOXICOLOGICAL INFORMATION

Components:	Sodium Hydroxide
Eye Contact:	Rabbit: 50 ug/24 hours; Severe
Skin Contact:	Rabbit: 500 mg/24 hours; Severe
Oral Rat LD_{50}:	No data available (Oral Rabbit LD_{Lo}: 500 mg/kg)
Dermal Rabbit LD_{50}:	1,350 mg/kg
Inhalation Rat LC_{50}:	No data available
Human Data:	No data available
Other Toxicological Data:	Intraperitoneal Mouse LD_{50}: 40 mg/kg
Carcinogenicity:	No data available
Teratogenicity:	No data available
Mutagenicity:	Hamster Cytogenetic Analysis; Lung: 10 mmol/Liter
Synergistic Products:	None reported
Target Organs:	Eyes, Skin, Mucous membranes & Lungs
Medical Conditions Aggravated By Exposure:	Skin or Respiratory disorders

12. ECOLOGICAL INFORMATION

ENVIRONMENTAL FATE:

This material is completely soluble in water and will significantly affect the pH of water. No specific environmental fate information is available.

ENVIRONMENTAL CONSIDERATIONS:

The aquatic toxicity for this material has not been determined. The aquatic toxicity for pure Sodium Hydroxide is: Cyprinus carpio LC_{100} = 180 ppm/24 hours at 25° C.

13. DISPOSAL CONSIDERATIONS

RCRA 40 CFR 261 CLASSIFICATON: Corrosive Waste

U.S. EPA WASTE NUMBER/DESCRIPTION: D002

If this product is disposed of as shipped, it meets the criteria of a hazardous waste as defined under 40 CFR 261 due to its corrosivity. If this product becomes a waste, it will be a hazardous waste, which is subject to the Land Disposal Restrictions under 40 CFR 268 and must be managed accordingly. As a hazardous liquid waste, it must be disposed of in accordance with local, state, and federal regulations in a permitted hazardous waste treatment, storage, and disposal facility.

14. TRANSPORTATION INFORMATION

DOT PROPER SHIPPING NAME: Sodium hydroxide solution

Hazard Class: 8 **UN Number:** UN1824 **Packing Group:** II

Primary Label: Corrosive **Subsidiary Label(s):** None Required

Primary/Subsidiary Placards: Corrosive

DOT Reportable Quantity (RQ): 1,000 pounds (NaOH) **RQ for Product:** 2,000 pounds (157.2 gallons)

Marine Pollutant: No

2004 North American Emergency Response Guidebook No.: 154

TDG PROPER SHIPPING NAME: SODIUM HYDROXIDE SOLUTION

Hazard Class: 8 **UN Number:** UN1824 **Packing Group:** II

Primary Label: Corrosive **Subsidiary Label(s):** None Required

Primary/Subsidiary Placards: Corrosive

TDG Reportable Quantity (RQ): # At least 5kg or 5 liters.

TDG Schedule XII: Not listed

Regulated Limit (RL): ## 50 kg (NaOH) **RL for Product:** 100 kg (65.6 liters)

Other Shipping Information: None

Canadian Transportation of Dangerous Goods Regulations (TDGR), Part IX, Table I, Quantities or levels for Immediate Reporting: releases of reportable quantities, RQ, that meet the definition of a "dangerous occurrence" (a threat to life, health, property, or the environment) must be reported to the appropriate authorities as outlined in TDGR 9.13(1) and 9.14(1).

Reporting to Environment Canada is required for any releases exceeding the regulated limits, RL, of 9.2 materials (primary or secondary). The regulated limits are found in Schedule XIII of the TDGR.

15. REGULATORY INFORMATION

COMPONENTS:	Sodium Hydroxide
OSHA Target Organs:	Eyes, Skin, Mucous membranes & Lungs
Carcinogenic Potential:	
Regulated by OSHA:	No
Listed on NTP Report:	No
Listed by IARC:	No
IARC Group:	Not applicable
ACGIH Appendix A:	Not listed
A1 Confirmed Human:	Not applicable
A2 Suspected Human:	Not applicable
U.S. EPA Requirements	
Release Reporting	
CERCLA (40 CFR 302)	
Listed Substance:	Yes
Reportable Quantity:	1,000 pounds
Category:	C
RCRA Waste No.:	None listed
Unlisted Substance:	Not applicable
Reportable Quantity:	Not applicable
Characteristic:	Not applicable
RCRA Waste No.:	Not applicable

SARA TITLE III

Section 302 & 303 (40 CFR 355):

Listed Substance:	Not listed
Reportable Quantity:	Not applicable
Planning Threshold:	Not applicable

Section 311 & 312 (40 CFR 370):

Hazard Categories (**product**): **Fire: N** **Sudden Release of Pressure: N** **Reactive: N** **Acute Health: Y** **Chronic Health: N**

Planning threshold: 10,000 pounds

Section 313 (40 CFR 372):

Listed Toxic Chemical:	Not listed
Reporting Threshold:	Not applicable

U.S. TSCA Status

Listed (40 CFR 710): Yes

State Regulations

State of California: Safe Drinking Water and Toxins Enforcement Act, 1986 (Proposition 65):

Carcinogen:	No
Reproductive Toxin:	No

Other Regulations

State Right To Know Laws: MA, NJ, PA, CA

Canadian Regulations

Product Information:

Controlled Product:	**Yes**
WHMIS Hazard Symbols:	**Corrosive Material**
WHMIS Class & Division:	**E**

Ingredient Information:

IDL Substance:	Yes
DSL or NDSL Lists:	DSL

16. OTHER INFORMATION

EPA Registration number: Not applicable

Approved Product Uses: Not applicable

Special Notes:

This product does not contain any material, which the State of California has found to cause cancer and/or birth defects or other reproductive harm.

NOTE: Deadly carbon monoxide gas can form when this material contacts food soil containing sugars. After cleaning operations are completed, thoroughly ventilate enclosed areas before entering. Always monitor oxygen and carbon monoxide levels when personnel are in enclosed areas. For proper tank entry procedures, see ANSI Z117.1-1977.

Special Instructions:

When making solutions, always add this material to cool (40 – 50° F.) water with adequate mixing to prevent overheating and possible spattering of a highly alkaline solution.

Do not allow this product to contact Aluminum, Magnesium, Tin or Zinc surfaces as this causes corrosion of the metal and generation of flammable / explosive Hydrogen gas.

MSDS Revision Information: Information Revised This Issue Date: **New product MSDS.**

Form Revision made 2/03/06

MSDS Distributed by: Brenntag Pacific, Inc.
NW Environmental Department
Phone: 503-242-0200 FAX: 503-412-3390

Prepared By:	Edward Doheny	Date Prepared:	July 31, 2007

This Material Safety Data Sheet is provided as an information resource only. It should not be taken as a warranty or representation for which Brenntag Pacific, Inc. assumes legal responsibility. While Brenntag Pacific, Inc. believes the information contained herein is accurate and compiled from sources believed to be reliable, it is the responsibility of the user to investigate and verify its validity. The buyer assumes all responsibility of using and handling the product in accordance with applicable federal, state, and local regulations.

NFPA	HMIS	PPE	Symbol(s)

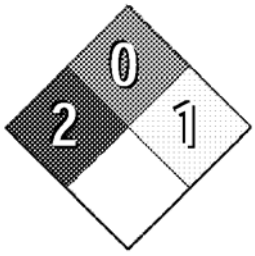

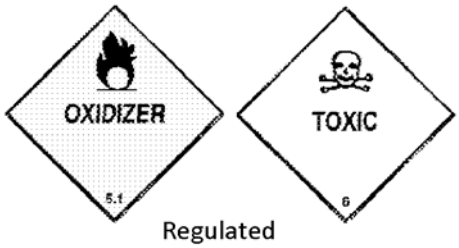

Regulated

Current Issue Date: May 16, 2013	Revision Number: 0

1. PRODUCT AND COMPANY IDENTIFICATION

Product Name:	Sodium Nitrite
Other/Generic Names:	Nitrous Acid, Sodium Salt, Sodium Nitrite (various grades)
Recommended Use:	Food preservation, dye manufacturing, corrosion inhibitor
Manufacturer:	General Chemical, LLC 90 East Halsey Road Parsippany, NJ 07054 General Chemical Performance Products Ltd. 90 East Halsey Road Parsippany, NJ 07054
For More Information:	Customer Service US ONLY: 800-631-8050 (Monday – Friday 9:00AM – 4:30PM) Customer Service CANADA ONLY: 866-543-3896 (Monday – Friday 9:00AM – 4:30PM)
Emergency Telephone Number:	US ONLY - CALL CHEMTREC: 800-424-9300 (24 Hours/Day, 7 Days/Week) CANADA ONLY - CALL CANUTEC: 613-996-6666 (24 Hours/Day, 7 Days/Week) OUTSIDE THE US - 703-527-3887

2. HAZARDS IDENTIFICATION

EMERGENCY OVERVIEW: White to slightly yellow crystalline solid. Toxic if swallowed or dust is inhaled. Oxidizer: may ignite organic materials and react with other materials. Can decompose if mixed with acids or exposed to fire conditions, releasing toxic nitrogen oxides.

OSHA Status:	This material is considered hazardous by the OSHA Hazard Communication Standard (29 CFR 1910.1200)
Potential Health Affects	
Skin:	May cause skin irritation.
Eyes:	May strongly irritate or burn the eyes.
Inhalation:	Product mists may cause irritation to the respiratory tract.
Ingestion:	May irritate the gastrointestinal tract. Although small quantities are used in food preperation, swallowing moderate amounts of sodium nitrite can result in serious toxic effects including death. Effects include nausea, weakness, cyanosis (blue skin), collapse and coma, possibly leading to death. Sodium nitrite interferes with the blood's ability to transport oxygen.
Delayed Effects:	None known. If Sodium nitrite is used with amines found in certain cutting fluids, potentially carcinogenic nitrosamine compounds may be formed.

3. COMPOSITION/INFORMATION ON INGREDIENTS

Component	CAS No	Weight %
Sodium nitrite	7632-00-0	>98%

4. FIRST AID MEASURES

Eye Contact	Immediately flush eyes with water for at least 15 minutes. Get medical attention if irritation persists.
Skin Contact	Flush with plenty of water, removing contaminated clothing. If irritation develops, get medical attention.
Inhalation	Remove to fresh air. If not breathing, give artificial respiration. If breathing is difficult, give oxygen. Get prompt medical attention.
Ingestion	Do not induce vomiting. Immediately give large quantities of water. Get medical attention immediately.
Notes to Physician	Sodium nitrite forms methemoglobin in the blood stream. Treat accordingly.

5. FIRE-FIGHTING MEASURES

Flammable Properties

FLASH POINT:	Not Flammable
FLASH POINT METHOD:	Not Applicable
AUTOIGNITION TEMPERATURE:	Not Applicable
UPPER FLAME LIMIT (VOLUME % IN AIR):	Not Applicable
LOWER FLAME LIMIT (VOLUME % IN AIR):	Not Applicable
FLAME PROPAGATION RATE (SOLIDS):	Not Applicable
OSHA FLAMMABILITY CLASS:	Not Applicable
SUITABLE EXTINGUISHING MEDIA:	Use flooding amounts of water or other agents.
UNSUITABLE EXTINGUISHING MEDIA:	Do NOT use dry chemicals containing ammonium phosphate.

Explosion Limits

Hazardous Combustion Products	No information available
Impact sensitivity	No information available
Sensitivity to static discharge	No information available
Specific Hazards Arising from the Chemical	Material does not burn but is an oxidizing agent and will support combustion of other materials. Product decomposes above 608 °F releasing toxic nitrogen oxides.
Protective Equipment and Precautions for Firefighters	Wear self-contained breathing apparatus (SCBA) and full protective equipment.

6. ACCIDENTAL RELEASE MEASURES

IN CASE OF SPILL OR OTHER RELEASE	Remove sources of ignition. Ventilate area. Use non-sparking tools and equipment. Sweep or shovel spilled material into containers. Dispose of material according to local, state and federal authorities. Do not allow product or residues to enter waterways and/or any source of drinking water.

7. HANDLING AND STORAGE

Handling	Avoid contact with skin and eyes. Do not breathe product dusts. Avoid contact with incompatible, combustible, organic or readily oxidizable materials.
Storage	Store in a cool, dry, well-ventilated area. Keep containers tightly closed. Do not store on wooden floors. Isolate from combustible materials. Empty containers may contain product residues; observe all warnings and precautions listed for the product.

8. EXPOSURE CONTROLS/PERSONAL PROTECTION

Component	ACGIH TLV	OSHA PEL	Ontario TWAEV	Mexico OEL (TWA)	NIOSH IDLH
Sodium Nitrite				TWA: 2 mg/m^3	

Engineering Measures Use local exhaust to keep airborne concentrations below the permissible exposure limits.

Personal Protective Equipment

Eye/Face Protection Wear chemical safety goggles. Do not wear contact lenses.

Skin Protection Wear appropriate personal protective clothing to prevent skin contact. If prolonged or repeated contact is anticipated, all clothing should be impervious to liquid.

Respiratory Protection A respiratory protection program that meets OSHA 1910.134 and ANSI Z88.2 or applicable federal/provincial requirements must be followed whenever workplace conditions warrant respirator use. NIOSH's "Respirator Decision Logic" may be useful in determining the suitability of various types of respirators.

General Hygiene Considerations To identify additional Personal Protective Equipment (PPE) requirements, it is recommended that a hazard assessment in accordance with the OSHA PPE Standard (29 CFR 1910.132) be conducted before using this product. Eyewash and safety showers are recommended.

9. PHYSICAL AND CHEMICAL PROPERTIES

Appearance	Crystals
Color	White to slightly yellow
Chemical Formula	$NaNO_2$
Odor	None
Odor Threshold	No information available
Physical State	Solid
pH	~9.0 (for aqueous solution)
Flash Point	Not flammable
Autoignition Temperature	Not applicable
Boiling Point/Range	Decomposes above 608°F
Melting Point/Range	520°F
Flammability Limits in Air	No information available
Explosive Properties	No information available
Oxidizing Properties	No information available
Evaporation Rate	Not determined
Vapor Pressure	Not applicable
Vapor Density	Not applicable
Specific Gravity	2.17
Partition Coefficient (n-octano/water)	No information available
Viscosity	No information available
Molecular Weight	69.0
Water Solubility	80.8 g/100 g at 68°F
VOC Content (%)	0

10. STABILITY AND REACTIVITY

Chemical Stability	Normally stable.
Conditions to Avoid	Material slowly oxidizes to sodium nitrate when exposed to air. Avoid heat, flame, ignition sources, shock, friction and incompatibilities.
Incompatible Products	Hazardous reactions can occur with acids, ammonium compounds, reducing agents (particularly cyanides, thiocyanates and thiosulfates). May ignite organic compounds and other combustible materials.
Hazardous Decomposition Products	Oxides of nitrogen (toxic and irritating)
Possibility of Hazardous Reactions	Will not occur.

11. TOXICOLOGICAL INFORMATION

Acute Toxicity

Component Information

Component	LD50 Oral	LD50 Dermal	LC50 Inhalation
Sodium nitrite	88 mg/kg (rat)		5.5 mg/m^3/4hr (rat)

Irritation	No information available
Corrosivity	No information available
Sensitization	No information available

Chronic Toxicity

Carcinogenicity	There are no known carcinogenic chemicals in this product.
Mutagenic Effects	No information available
Reproductive Effects	No information available
Developmental Effects	No information available
Teratogenicty	Multiple reproductive tests indicate that sodium nitrite is not teratogenic.
Target Organ Effects	No information available
Other Adverse Effects	Fetal toxicity has been demonstrated in pregnant animals fed toxic doses of sodium nitrite. This is due to the formation of methemoglobin.
Endocrine Disruptor Information	No information available

12. ECOLOGICAL INFORMATION

Ecotoxicity

Contains no substances known to be hazardous to the environment or not degradable in waste water treatment plants.

Component	Freshwater Algae	Freshwater Fish	Microtex	Water Flea
Sodium nitrite		LC50 = 0.19 mg/L Oncorhynchus mykiss 96 h		

Persistence and Degradability	No information available
Bioaccumulation	No information available
Mobility in Environmental Media	No information available

Component	Log Pow
Sodium nitrite	-3.7

13. DISPOSAL CONSIDERATIONS

Waste Disposal Methods	Dispose of waste in accordance with all federal, state, and local regulations.
Contaminated Packaging	Empty containers should be taken for local recycling, recovery or waste disposal.

14. TRANSPORT INFORMATION

DOT	Regulated
Proper Shipping Name	Sodium nitrite
Hazard Class	5.1
Subsidiary Hazard Class	6.1
UN-No	UN1500
Packing Group	PGIII
TDG	Regulated
Hazard Class	5.1
Subsidiary Hazard Class	6.1
UN-No	UN1500
Packing Group	PGIII
IMDG	Product is a marine pollutant if shipped overseas

15. REGULATORY INFORMATION

International Inventories

TSCA	Yes
DSL	Yes
ELINCS	No
EINECS	Yes
ENCS	Yes
CHIINA	Yes
KECL	Yes
PICCS	Yes
AICS	Yes

U.S. Federal Regulations

SARA 313

Section 313 of Title III of the Superfund Amendments and Reauthorization Act of 1986 (SARA). This product contains the following chemicals which are subject to the reporting requirements of the Act and Title 40 of the Code of Federal Regulations, Part 372:

Component	CAS-No	Weight %	SARA 13 - Threshold Values
Sodium nitrite	7632-00-0	>98	1.0

SARA 311/312 Hazardous Categorization

Chronic Health Hazard	No
Acute Health Hazard	Yes
Fire Hazard	No
Sudden Release of Pressure Hazard	No
Reactive Hazard	Yes

Clean Water Act

Component	CWA – Reportable Quantities	CWA – Toxic Pollutants	CWA – Priority Pollutants	CWA – Hazardous Substances
Sodium nitrite	100 lb			X

CERCLA

Component	CERCLA RQ (lb)	SARA TPQ (lb)
Sodium nitrite	100 lb	

U.S. State Regulations

California Proposition 65

This product does not contain any Proposition 65 chemicals.

State Right-to-Know

Component	Massachusetts	New Jersey	Pennsylvania	Illinois	Rhode Island
Sodium nitrite	X	X	X		

Other International Regulations

Mexico — No information available

Canada — This product has been classified in accordance with the hazard criteria of the Controlled Products Regulations (CPR) and the MSDS contains all the information required by the CPR.

WHMIS Hazard Class	
C Oxidizing materials	
D1B Toxic materials	
D2B Toxic materials	

16. OTHER INFORMATION

Current Issue Date:	May 16, 2013
Previous Issue Date:	November 26, 2012
Revision Summary:	Change to section 1

Disclaimer:

All information, statements, data, service and/or recommendations, including, without limitation, those relating to storage, loading/unloading, piping and transportation (collectively referred to herein as "information") are believed to be accurate and reliable. However, no representation or warranty, express or implied, is made as to its completeness, accuracy, fitness for a particular purpose or any other matter, including, without limitation, that the practice or application of any such information is free of patent infringement or other intellectual property misappropriation. General Chemical, LLC is not engaged in the business of providing technical, operational, engineering or safety information for a fee, and therefore; any such information provided herein has been furnished as an accommodation and without charge. All information provided herein is intended for use by persons having requisite knowledge, skill and experience in the chemical industry. General Chemical, LLC shall not be responsible or liable for the use, application or implementation of the information, provided herein, and all such information is to be used at the risk, and in the sole judgment and discretion, of such persons, their employees, advisors and agents.

End of MSDS

1 . Product and company identification

Product name : **SURFONIC® N-95** MSDS # **00033063**

Product use : **Surfactant**

Huntsman Petrochemical Corporation
P.O. Box 4980
The Woodlands, TX 77387-4980

TELEPHONE NUMBERS
Transportation Emergency
Company: (800) 328-8501
CHEMTREC: (800) 424-9300
Medical Emergency: (409) 722-9673 (24 Hour)
General MSDS Assistance: (281) 719-6000
Technical Information: (281) 719-7780
E-MAIL: MSDS@huntsman.com

Validation date : **3/4/2009.**

In case of emergency

Spills Leaks Fire or Exposure Call Chemtrec: (800) 424-9300
Medical Emergency Information: (800) 328-8501
In Mexico: 01 800 00 214 00
In Columbia: 01 800 91 6012

2 . Hazards identification

Physical state : Liquid. [Liquid.]

Odor : Slight

OSHA/HCS status : While this material is not considered hazardous by the OSHA Hazard Communication Standard (29 CFR 1910.1200), this MSDS contains valuable information critical to the safe handling and proper use of the product. This MSDS should be retained and available for employees and other users of this product.

Emergency overview : CAUTION!

MAY CAUSE EYE AND SKIN IRRITATION.

Slightly irritating to the eyes and skin. Avoid breathing vapor or mist. Avoid contact with eyes. Avoid prolonged or repeated contact with skin. Wash thoroughly after handling.

GENERAL INFORMATION : Read the entire MSDS for a more thorough evaluation of the hazards.

3 . Composition/information on ingredients

Name	CAS number	%
Nonylphenol, ethoxylated	9016-45-9	60 - 100

SURFONIC® N-95

4 . First aid measures

Eye contact : Get medical attention immediately. Immediately flush eyes with plenty of water, occasionally lifting the upper and lower eyelids. Check for and remove any contact lenses. Continue to rinse for at least 10 minutes. Chemical burns must be treated promptly by a physician.

Skin contact : Flush contaminated skin with plenty of water. Remove contaminated clothing and shoes. Get medical attention if symptoms occur. Wash clothing before reuse. Clean shoes thoroughly before reuse.

Inhalation : Move exposed person to fresh air. Keep person warm and at rest. If not breathing, if breathing is irregular or if respiratory arrest occurs, provide artificial respiration or oxygen by trained personnel. It may be dangerous to the person providing aid to give mouth-to-mouth resuscitation. Get medical attention if adverse health effects persist or are severe. If unconscious, place in recovery position and get medical attention immediately. Maintain an open airway. Loosen tight clothing such as a collar, tie, belt or waistband.

Ingestion : Wash out mouth with water. Move exposed person to fresh air. Do not induce vomiting unless directed to do so by medical personnel. Get medical attention if symptoms occur. Never give anything by mouth to an unconscious person.

Notes to physician : Symptomatic and supportive therapy as needed. Following severe exposure medical follow-up should be monitored for at least 48 hours.

5 . Fire-fighting measures

Flash point : Closed cup: 237.78°C (460°F) [Pensky-Martens.]

Products of combustion : Decomposition products may include the following materials:
carbon dioxide
carbon monoxide

Extinguishing media

Suitable : Use an extinguishing agent suitable for the surrounding fire.

Not suitable : None known.

Special exposure hazards : In a fire or if heated, a pressure increase will occur and the container may burst.

Promptly isolate the scene by removing all persons from the vicinity of the incident if there is a fire. No action shall be taken involving any personal risk or without suitable training.

Special protective equipment for fire-fighters : Fire-fighters should wear appropriate protective equipment and self-contained breathing apparatus (SCBA) with a full face-piece operated in positive pressure mode.

6 . Accidental release measures

Personal precautions : No action shall be taken involving any personal risk or without suitable training. Evacuate surrounding areas. Keep unnecessary and unprotected personnel from entering. Do not touch or walk through spilled material. Put on appropriate personal protective equipment (see section 8).

Environmental precautions : Avoid dispersal of spilled material and runoff and contact with soil, waterways, drains and sewers. Inform the relevant authorities if the product has caused environmental pollution (sewers, waterways, soil or air).

Methods for cleaning up : Stop leak if without risk. Move containers from spill area. Prevent entry into sewers, water courses, basements or confined areas. Wash spillages into an effluent treatment plant or proceed as follows. Contain and collect spillage with non-combustible, absorbent material e.g. sand, earth, vermiculite or diatomaceous earth and place in container for disposal according to local regulations (see section 13). Dispose of via a licensed waste disposal contractor. Note: see section 1 for emergency contact information and section 13 for waste disposal.

SURFONIC® N-95

7 . Handling and storage

Handling : Put on appropriate personal protective equipment (see section 8). Eating, drinking and smoking should be prohibited in areas where this material is handled, stored and processed. Workers should wash hands and face before eating, drinking and smoking. Do not ingest. Avoid contact with eyes, skin and clothing. Avoid breathing vapor or mist. Keep in the original container or an approved alternative made from a compatible material, kept tightly closed when not in use. Empty containers retain product residue and can be hazardous. Do not reuse container.

Storage : Store in accordance with local regulations. Store in original container protected from direct sunlight in a dry, cool and well-ventilated area, away from incompatible materials (see section 10) and food and drink. Keep container tightly closed and sealed until ready for use. Containers that have been opened must be carefully resealed and kept upright to prevent leakage. Do not store in unlabeled containers. Use appropriate containment to avoid environmental contamination.

8 . Exposure controls/personal protection

Consult local authorities for acceptable exposure limits.

Preventive Measures : Conditions of use, adequacy of engineering or other control measures, and actual exposures will dictate the need for specific protective devices at your workplace.

Engineering controls : Use local exhaust ventilation to maintain airborne concentrations below the TLV. Suitable respiratory equipment should be used in cases of insufficient ventilation or where operational procedures demand it. For guidance on engineering control measures refer to publications such as the ACGIH current edition of 'Industrial Ventilation, a manual of Recommended Practice.'

Personal protection

Eyes : Safety eyewear complying with an approved standard should be used when a risk assessment indicates this is necessary to avoid exposure to liquid splashes, mists or dusts.

Skin : Personal protective equipment for the body should be selected based on the task being performed and the risks involved and should be approved by a specialist before handling this product.

Respiratory : Use a properly fitted, air-purifying or air-fed respirator complying with an approved standard if a risk assessment indicates this is necessary. Respirator selection must be based on known or anticipated exposure levels, the hazards of the product and the safe working limits of the selected respirator.

Hands : Chemical-resistant, impervious gloves complying with an approved standard should be worn at all times when handling chemical products if a risk assessment indicates this is necessary.

9 . Physical and chemical properties

General information

Appearance

Physical state : Liquid. [Liquid.]

Color : Pale color.

Odor : Slight

Odor threshold : Not available.

Important health, safety and environmental information

pH : 7

Boiling point : Not available.

Melting point : 5°C (41°F)

Flash point : Closed cup: 237.78°C (460°F) [Pensky-Martens.]

9 . Physical and chemical properties

Oxidizing properties	:	Not available.
Vapor pressure	:	<0.13 kPa (<1 mm Hg)
Relative density	:	1.06
Viscosity	:	Kinematic: 1.1 cm^2/s (110 cSt at 100°F)
Vapor density	:	Not available.
VOC content	:	Not available.

10 . Stability and reactivity

Stability and reactivity	:	The product is stable.
Incompatibility with various substances	:	Reactive or incompatible with the following materials: oxidizing materials, reducing materials and metals.
Hazardous polymerization	:	Under normal conditions of storage and use, hazardous polymerization will not occur.
Hazardous decomposition products	:	Decomposition products may include the following materials: carbon dioxide carbon monoxide

11 . Toxicological information

Toxicity data

Acute toxicity

Product/ingredient name	test	Species	Result	Exposure
Nonylphenol, ethoxylated	LD50 Oral	Rat	3310 mg/kg	-
	LD50 Dermal	Rabbit	>2000 mg/kg	-

Potential acute health effects

Ingestion	:	No known significant effects or critical hazards.
Inhalation	:	No known significant effects or critical hazards.
Eyes	:	Slightly irritating to the eyes.
Skin	:	Slightly irritating to the skin.

Potential chronic health effects

Target organs	:	No known significant effects or critical hazards.
Carcinogenicity	:	No known significant effects or critical hazards.
Mutagenicity	:	No known significant effects or critical hazards.
Teratogenicity	:	No known significant effects or critical hazards.
Fertility effects	:	No known significant effects or critical hazards.
Developmental effects	:	No known significant effects or critical hazards.

12 . Ecological information

Aquatic ecotoxicity

Product/ingredient name	test	Result	Species	Exposure
Nonylphenol, ethoxylated	-	Acute LC50 1 to 10 mg/L	Fish	96 hours

Biodegradability

Product/ingredient name	test	Result	Dose	Inoculum
Nonylphenol, ethoxylated	-	60 % - Inherent - 28 days	-	-

Product/ingredient name	Aquatic half-life	Photolysis	Biodegradability

12 . Ecological information

Nonylphenol, ethoxylated	-	-	Not readily

Environmental effects : Toxic to aquatic organisms, may cause long-term adverse effects in the aquatic environment.

13 . Disposal considerations

Waste disposal : The generation of waste should be avoided or minimized wherever possible. Empty containers or liners may retain some product residues. This material and its container must be disposed of in a safe way. Dispose of surplus and non-recyclable products via a licensed waste disposal contractor. Disposal of this product, solutions and any by-products should at all times comply with the requirements of environmental protection and waste disposal legislation and any regional local authority requirements. Avoid dispersal of spilled material and runoff and contact with soil, waterways, drains and sewers.

14 . Transport information

Transportation Emergency Number 1-800-424-9300 (CHEMTREC).

Regulatory information	UN number	Proper shipping name	Class	PG*	Label	Additional information
DOT Classification	Not regulated.					-
TDG Classification	Not regulated.					-
IMDG Class	Not regulated.		-	-		-
IATA-DGR Class	Not regulated.		-	-		-

■

PG* : Packing group

15 . Regulatory information

United States

HCS Classification : Not regulated.

U.S. Federal regulations : **United States inventory (TSCA 8b):** All components are listed or exempted.

CERCLA: Hazardous substances. : No ingredients listed.

This product does not contain nor is it manufactured with ozone depleting substances.

SARA 313

		Product name	CAS number	Concentration
Form R - Reporting requirements	:	GLYCOL ETHERS (FRACTION OF PRODUCT MEETING EPA DEFINITION)	Blend	3%

SARA 313 notifications must not be detached from the MSDS and any copying and redistribution of the MSDS shall include copying and redistribution of the notice attached to copies of the MSDS subsequently redistributed.

15 . Regulatory information

WARNING: This product contains a chemical known to the State of California to cause cancer and birth defects or other reproductive harm.

Ingredient name	Cancer	Reproductive	No significant risk level	Maximum acceptable dosage level
Ethylene oxide	Yes.	Yes.	Yes.	Yes.

Canada

WHMIS (Canada) : Class D-2B: Material causing other toxic effects (Toxic).

CEPA (DSL) : DSL: All Ingredients Listed.

This product has been classified in accordance with the hazard criteria of the Controlled Products Regulations and the MSDS contains all the information required by the Controlled Products Regulations.

16 . Other information

Label requirements : MAY CAUSE EYE AND SKIN IRRITATION.

Hazardous Material Information System (U.S.A.) :



National Fire Protection Association (U.S.A.) :

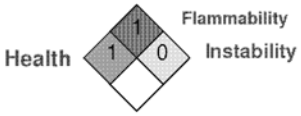

Date of printing : **3/5/2009.**

Date of issue : **4 March 2009**

Date of previous issue : 3/3/2009.

Notice to reader

While the information and recommendations in this publication are to the best of our knowledge, information and belief accurate at the date of publication, NOTHING HEREIN IS TO BE CONSTRUED AS A WARRANTY, EXPRESS OR OTHERWISE.
IN ALL CASES, IT IS THE RESPONSIBILITY OF THE USER TO DETERMINE THE APPLICABILITY OF SUCH INFORMATION AND RECOMMENDATIONS AND THE SUITABILITY OF ANY PRODUCT FOR ITS OWN PARTICULAR PURPOSE.
THE PRODUCT MAY PRESENT HAZARDS AND SHOULD BE USED WITH CAUTION. WHILE CERTAIN HAZARDS ARE DESCRIBED IN THIS PUBLICATION, NO GUARANTEE IS MADE THAT THESE ARE THE ONLY HAZARDS THAT EXIST.

Hazards, toxicity and behaviour of the products may differ when used with other materials and are dependent upon the manufacturing circumstances or other processes. Such hazards, toxicity and behaviour should be determined by the user and made known to handlers, processors and end users.
NO PERSON OR ORGANIZATION EXCEPT A DULY AUTHORIZED HUNTSMAN EMPLOYEE IS AUTHORIZED TO PROVIDE OR MAKE AVAILABLE DATA SHEETS FOR HUNTSMAN PRODUCTS. DATA SHEETS FROM UNAUTHORIZED SOURCES MAY CONTAIN INFORMATION THAT IS NO LONGER CURRENT OR ACCURATE. NO PART OF THIS DATA SHEET MAY BE REPRODUCED OR TRANSMITTED IN ANY FORM, OR BY ANY MEANS, WITHOUT PERMISSION IN WRITING FROM HUNTSMAN. ALL REQUESTS FOR PERMISSION TO REPRODUCE MATERIAL FROM THIS DATA SHEET SHOULD BE DIRECTED TO HUNTSMAN, MANAGER, PRODUCT SAFETY AT THE ABOVE ADDRESS.

Revision Number: 001.1 **Issue date:** 06/26/2009
IDH number: 1314676 Product name: BONDERITE S-AD RODINE 2010 ACID INHIBITOR ADDITIVE known as P3 RODINE 20 10
Page 1 of 5

1. PRODUCT AND COMPANY IDENTIFICATION

Product name: BONDERITE S-AD RODINE 2010 ACID INHIBITOR ADDITIVE known as P3 RODINE 20 10
IDH number: 1314676
Product type: Corrosion inhibitor
Region: United States
Company address: Contact information:
Henkel Corporation
32100 Stephenson Highway
Madison Heights, MI 48071
Telephone: 248.583.9300
For Chemical Emergency: Call CHEMTREC at 800.424.9300
Internet: www.henkelna.com

2. HAZARDS IDENTIFICATION

EMERGENCY OVERVIEW
HMIS:
Physical state: Liquid **HEALTH:** *2
Color: Light amber **FLAMMABILITY:** 0
Odor: Aromatic **PHYSICAL HAZARD:** 0
Personal Protection: See MSDS Section 8

WARNING: CAUSES EYE, SKIN AND RESPIRATORY TRACT IRRITATION.
MAY BE HARMFUL OR FATAL IF SWALLOWED.
MAY CAUSE ALLERGIC SKIN REACTION.

Relevant routes of exposure: Skin, Inhalation, Eyes
Potential Health Effects
Inhalation: Inhalation of vapors or mists of the product may be irritating to the respiratory system.
Skin contact: Prolonged and/or repeated skin contact with this product may cause irritation/dermatitis. Contact with skin can cause irritation and allergic reaction (sensitization) in some individuals.
Eye contact: Contact with eyes can cause eye irritation. May cause severe eye irritation.
Ingestion: May cause irritation and symptoms similar to ethyl alcohol intoxication. Swallowing large volumes of ethylene glycol can lead to kidney damage.
Existing conditions aggravated by exposure:
Eye, skin and respiratory disorders.
This material is considered hazardous by the OSHA Hazard Communication Standard (29 CFR 1910.1200).
See Section 11 for additional toxicological information.

3. COMPOSITION / INFORMATION ON INGREDIENTS

Hazardous components CAS NUMBER %
Poly(ethylene glycol) Proprietary 30 - 60
Ethylene glycol 107-21-1 5 - 10
1,3-Diethyl-2-thiourea 105-55-5 5 - 10
Ethoxylated Propoxylated alcohol Proprietary 1 - 5
quinolinium chloride 530-64-3 1 – 5

4. FIRST AID MEASURES

Inhalation: If mist or vapor of this product is inhaled, remove person immediately to fresh air. Seek medical attention if symptoms develop or persist.
Skin contact: For skin contact flush with large amounts of water. Obtain medical attention if irritation persists.
Eye contact: In case of contact with eyes, rinse immediately with plenty of water and seek medical advice.
Ingestion: Seek medical advice. DO NOT induce vomiting unless directed to do so by medical personnel.
Notes to physician: In the treatment of ethylene glycol overdose, ethanol competitively inhibits alcohol dehydrogenase (ADH) and prevents the formation of toxic metabolites.
The affinity of ethylene glycol for ADH appears to be similar to ethanol.
Ethanol should be administered only by qualified medical personnel.

5. FIRE FIGHTING MEASURES

Flash point: Not applicable
Flashback: Not applicable
Flame projection: Not applicable
Autoignition temperature: Not determined
Flammable/Explosive limits - lower: Not determined
Flammable/Explosive limits - upper: Not determined
Extinguishing media: Water spray (fog), foam, dry chemical or carbon dioxide.
Special firefighting procedures: Wear full protective clothing. Wear self-contained breathing apparatus.
Unusual fire or explosion hazards: This product is an aqueous mixture which will not burn.
Hazardous combustion products: Irritating and toxic gases or fumes may be released during a fire.

6. ACCIDENTAL RELEASE MEASURES

Use personal protection recommended in Section 8, isolate the hazard area and deny entry to unnecessary and unprotected personnel.
Environmental precautions: Prevent further leakage or spillage if safe to do so. Wear appropriate protective equipment and clothing during clean-up. Do not allow product to enter sewer or waterways.
Clean-up methods: Absorb spill with inert material. Shovel material into appropriate container for disposal.

7. HANDLING AND STORAGE

Handling: Prevent contact with eyes, skin and clothing. Do not breathe vapor and mist.
Wash thoroughly after handling. Do not take internally. For industrial use only.
Launder work clothes frequently.
Storage: For safe storage, store between -10 °C (14°F) and 40 °C (104°F)
Keep container tightly closed and in a cool, well-ventilated place away from incompatible materials. Thaw and mix thoroughly if frozen.
For information on product shelf life, please review labels on container or check the Technical Data Sheet.

8. EXPOSURE CONTROLS / PERSONAL PROTECTION

Employers should complete an assessment of all workplaces to determine the need for, and selection of, proper exposure controls and protective equipment for each task performed.

Hazardous components ACGIH TLV OSHA PEL AIHA WEEL OTHER

Poly(ethylene glycol) None None 10 mg/m3 TWA
Particulate. None
Ethylene glycol 100 mg/m3 Ceiling
Aerosol. None None None
1,3-Diethyl-2-thiourea None None None None
Ethoxylated Propoxylated alcohol None None None None
quinolinium chloride None None
0.001 ppm (0.005
mg/m3) TWA
(SKIN)
None

Engineering controls: Provide local and general exhaust ventilation to effectively remove and prevent buildup of any vapors or mists generated from the handling of this product.

Respiratory protection: If ventilation is not sufficient to effectively prevent buildup of aerosols, mists or vapors, appropriate NIOSH/MSHA respiratory protection must be provided.

Eye/face protection: Wear chemical goggles; face shield (if splashing is possible).

Skin protection: Wear impervious gloves for prolonged contact. Use of impervious apron and boots are recommended.

9. PHYSICAL AND CHEMICAL PROPERTIES

Physical state: Liquid
Color: Light amber
Odor: Aromatic
Odor threshold: Not available
pH: 3.8 - 4.2 (10% solution)
Vapor pressure: 17 mbar
Boiling point/range: 103.2 °C (217.8 °F)
Melting point/ range: -20 °C (-4°F)
Specific gravity: 1.09 - 1.11 at 20 °C (68°F)
Vapor density: Not available
Flash point: Not applicable
Flashback: Not applicable
Flame projection: Not applicable
Flammable/Explosive limits - lower: Not determined
Flammable/Explosive limits - upper: Not determined
Autoignition temperature: Not determined
Evaporation rate: Not available
Solubility in water: Complete
Partition coefficient (n-octanol/water): Not determined
VOC content: Not available

10. STABILITY AND REACTIVITY

Stability: Stable at normal conditions.
Hazardous reactions: Will not occur.
Hazardous decomposition products: Upon decomposition, this product emits carbon monoxide, carbon dioxide and/or low molecular weight hydrocarbons.
Incompatible materials: This product may react with strong alkalies.
Conditions to avoid: None identified.

11. TOXICOLOGICAL INFORMATION

Hazardous components NTP Carcinogen IARC Carcinogen
OSHA Carcinogen
(Specifically Regulated)
Poly(ethylene glycol) No No No
Ethylene glycol No No No
1,3-Diethyl-2-thiourea No No No
Ethoxylated Propoxylated alcohol No No No
quinolinium chloride No No No
Hazardous components Health Effects/Target Organs
Poly(ethylene glycol) Irritant
Ethylene glycol Blood, Bone Marrow, Central nervous system, Developmental, Eyes, Irritant, Kidney, Liver, Metabolic
1,3-Diethyl-2-thiourea Irritant, Allergen
Ethoxylated Propoxylated alcohol Irritant, Allergen
quinolinium chloride No Data

12. ECOLOGICAL INFORMATION

Ecological information: Not available

13. DISPOSAL CONSIDERATIONS

Information provided is for unused product only.
Recommended method of disposal: Dispose of according to Federal, State and local governmental regulations.
Hazardous waste number: Material, if discarded, is not expected to be a characteristic hazardous waste under RCRA. Wastes must be tested using methods described in 40 CFR Part 261 to determine if it meets applicable definitions of hazardous wastes.

14. TRANSPORT INFORMATION

U.S. Department of Transportation Ground (49 CFR)
Proper shipping name: Not regulated
Hazard class or division: None
Identification number: None
Packing group: None
International Air Transportation (ICAO/IATA)
Proper shipping name: Not regulated
Hazard class or division: None
Identification number: None
Packing group: None
Water Transportation (IMO/IMDG)
Proper shipping name: Not regulated
Hazard class or division: None
Identification number: None
Packing group: None

15. REGULATORY INFORMATION

United States Regulatory Information
TSCA 8 (b) Inventory Status: All components are listed or are exempt from listing on the Toxic Substances Control Act Inventory.
TSCA 12(b) Export Notification: None above reporting de minimus
CERCLA/SARA Section 302 EHS: None above reporting de minimus
CERCLA/SARA Section 311/312: Immediate Health, Delayed Health

CERCLA/SARA 313: This product contains the following toxic chemicals subject to the reporting requirements of section 313 of the Emergency Planning and Community Right-To-Know Act of 1986 (40 CFR 372). Ethylene glycol (CAS# 107-21-1).
California Proposition 65: This product contains a chemical known in the State of California to cause cancer. This product contains a chemical known to the State of California to cause birth defects or other reproductive harm.
Canada Regulatory Information
CEPA DSL/NDSL Status: Contains one or more components listed on the Non-Domestic Substances List. All other components are listed on or are exempt from listing on the Domestic Substances List.
Components listed on the NDSL must be tracked by all Canadian Importers of Record as required by Environment Canada. They may be imported into Canada in limited quantities.
Please contact Regulatory Affairs for additional details.
WHMIS hazard class: D.2.A

16. OTHER INFORMATION

This material safety data sheet contains changes from the previous version in sections: Updated composition in Section 3.
Prepared by: John DiCerbo, Regulatory Affairs Specialist
DISCLAIMER: The data contained herein are furnished for information only and are believed to be reliable. However, Henkel Corporation does not assume responsibility for any results obtained by persons over whose methods Henkel Corporation has no control. It is the user's responsibility to determine the suitability of Henkel's products or any production methods mentioned herein for a particular purpose, and to adopt such precautions as may be advisable for the protection of property and persons against any hazards that may be involved in the handling and use of any of Henkel Corporation's products. In light of the foregoing, Henkel Corporation specifically disclaims all warranties, express or implied, including warranties of merchantability and fitness for a particular purpose, arising from sale or use of Henkel Corporation's products. Henkel Corporation further disclaims any liability for consequential or incidental damages of any kind, including lost profits.

ABEINSA EPC
MOJAVE

Emergency Plan - HMBP

Title: Annex 03 Health and Safety Emergency Response and Preparedness Plan
Process: Business Emergency Contingency Plan
Project: Mojave Solar Project

Document No:	PEM-0002-01 Annex 03
Revision:	00
Date:	6/21/13

Prepared by:	
Kirk Anderson – Environmental Engineer	Electronic Signature

Reviewed by:	
Efrain Perez – Quality Manager	Electronic Signature
Steven Pochmara – Permitting Manager	Electronic Signature

Approved by:	
Nicolas Gallo – Project Sub Director	Electronic Signature
Rafael Sanchez Mendoza – Project Director	Electronic Signature

This document belongs to the Abener Teyma Mojaves. Its total or partial reproduction, by any means, as well as distribution to third parties without the express written consent of the Abener Teyma Mojave is strictly forbidden.

Emergency Response Plan

Title: Emergency Response and Preparedness Plan
Process: Implementation Requirements
Sub process: Establish an OH&S Emergency Management Process

Document:	6007-PEM-ATM-79-00-0001
Revision:	01
Date:	04/22/2012

Prepared by:	
Jorge Daniel Collado Álvarez – Interim Health and Safety Manager	Electronic Signature
Kirk Anderson – Environmental Engineer	Electronic Signature

Concurred by:	
Jorge Daniel Collado – Interim Health and Safety Manager	Electronic Signature
Efraim Perez – Quality Manager	Electronic Signature

Approved by:	
Nicolás Gallo Massa – Project Sub-Director	Electronic Signature
Rafael Sánchez Mendoza – Project Director	Electronic Signature

This document is property of Abeinsa EPC. Total or partial reproduction by any means is prohibited, as well as the distribution to third parties, without the express written consent of Abeinsa EPC.

If for any exceptional reasons due to specificities of project (e.g.: confidential project information, legal or regulatory requirements of local level and/or contractual requirements of the client), there was the need to modify these requirements, the changes must be documented in the quality, environment and prevention of occupational risks of the project plan, prior authorization by the Department of Central Services Management Systems

The original of this document is electronically signed and filed in the document manager Abeinsa EPC.

Revisions Control Sheet

Rev.	Date	Cause for Revision	Prepared By	Concurred By	Approved By
00	09/24/12	Document created	SK - KIA	JDC-EFP-BRA	NGM-RSM
01	04/22/13	Revised and information updated	SK - KIA	JDC-EFP-BRA	NGM-RSM
02	03/15/14	Inventory Update	KIA		
03	04/30/14	Inventory Update	KIA		

Changes from the original content to the next revision will be identified by underlines for quick identification of changes.

Table of Content

1.0 Objectives 5
2.0 Definitions 5
3.0 Purpose and Scope of Application 5
4.0 Applicable Documentation 6
5.0 Emergency Phone Numbers 6
5.1 Agency Phone Numbers 6
5.2 Site Emergency Contacts 6
6.0 Responsibilities 7
6.1 All Abeinsa EPC Personnel 7
6.2 Abeinsa EPC H&S Department 7
6.3 Emergency Response Coordinators 8
6.4 Abeinsa EPC Activity Managers 8
6.5 Subcontractors 9
7.0 Procedures 9
7.1 Evacuations 9
7.2 Personal Injury or Illness 11
7.3 Security Threat 12
7.4 Fires 12
7.5 Severe Weather 13
7.6 Earthquakes 14
7.7 Hazardous Chemical Spills Leaks 15
7.7.1 Spill Containment: 15
7.7.2 Record 16
8.0 Public Relations 16
8.1 Media Inquiry Procedure 16
9.0 Communication of Emergencies 17
10.0 Appendix 17

1.0 Objectives

To develop a project specific Emergency Response Plan for the Abeinsa EPC Mojave Solar Site and provide site personnel the immediate actions, requirements, points of contact and any follow up actions in the event of, but not limited to the following:

- Evacuation
- Personnel Injury or Illness
- Security Threat
- Fire
- Severe Weather
- Earthquake
- Hazardous Chemical Spills

These procedures shall be adhered to and used in conjunction with the Mojave Solar Project Health and Safety Plan to ensure the protection of personnel, equipment and material.

2.0 Definitions

Assembly Area(s) / Muster Point:
Assembly area is a safeguard by which occupants of a building evacuate to the designated assembly area during an emergency.

ERPP:
Emergency Response and Preparedness Program.

Incident Commander (IC):
The Incident Commander is a trained and qualified person who is responsible for the overall management of an emergency situation.

Material Safety Data Sheet (MSDS):
is a document that explains the characteristics of a chemical, the hazards that it possess and how to contain those hazards and emergency responses. The document also explains the use and storage of said chemical.

Shelter-in-place:
Practices include closing windows and doors, and moving occupants away from perimeter windows and doors to a safer interior location. Ensure shut down of HVAC/air handling systems, external generators, etc.

Landing Area:
Location designated and reserved for air support and rescue/medi-evac.

3.0 Purpose and Scope of Application

This section applies to all personnel performing work on the Abeinsa EPC construction sites or inside any subsidiary facilities.

The history for response times from the medical team to this site is approximately 20 to 30 minutes. However, on-site medical services are provided. Note, construction or commissioning phases will require additional resources, rescue services for hi-angle rescue, confined space and excavations may require external resources.

The response of all site personnel to an emergency situation should be serious and immediate. An individual should not endanger themselves or co-workers by indecision, delay, or an attempt to save property or equipment. Individuals should be familiar with emergency procedures applicable to their normal working areas so that proper and prompt action can be taken in each emergency situation. If visiting another site area, follow the emergency procedures for that area by following the example of local personnel and asking for guidance.

4.0 Applicable Documentation

- ISO 9001:2008, Quality Management Systems-requirements
- ISO 14001: 2004, Environmental Management System-requirements
- OHSAS 18001:2007, Occupational Health and Safety and Assessment System
- POG-SCMA-72-02 Annex 5A, Health, Safety and Environmental
- Cal/OSHA Title 8 California Code of Regulations (T8CCR)
- OSHA 29 CFR 1926 – Standard for Construction Industry

5.0 Emergency Phone Numbers

For many emergencies, the first appropriate action to be taken is to summon competent assistance.

5.1 Agency Phone Numbers

See Appendix 01. Emergency Phone List

5.2 Site Emergency Contacts

See Appendix 01. Emergency Phone List

Once help has arrived, assist them according to your knowledge and training or as directed.

Attention:
In the event of any emergency requiring the notification of emergency response agencies, Site management or on-call supervision shall be notified only after the emergency service has been notified and is on the way.

6.0 Responsibilities

The duties and responsibilities of specific individuals or groups are further outlined below.

6.1 All Abeinsa EPC Personnel

- Read, understand, and comply with the requirements set forth in this plan.
- Report emergencies as specified in their specific section within this plan.
- Participate in and complete all required training.
- Participate in all emergency response drills.

6.2 Abeinsa EPC H&S Department

ABEINSA EPC H&S Site Orientation will include an explanation of the site emergency response and preparedness plan and procedures. The main site emergency contacts are:

- H&S Manager (Interim) – Jorge Daniel Collado Alvarez (314) 488-7221
- H&S Supervisor – Bruce Asaro (661) 754-6023
- Const. Director – Leonardo Bruno (949) 572-9254
- Const. Sub Director – Enrique Valades Nieto (314) 420-9367
- Assembly Director – Antonio Guimaraes Teixeira Junior (661) 754-3555
- H&S Supervisor – Michael Carey (661) 754-6560 (Ref. TAB ERPP)
- On Duty Site EMT – (813) 618-0790

For updates, be referred to Appendix 01. Emergency Phone List

The H&S Manager, or designee, shall furnish information regarding site-related emergency and evacuation measures. The following items are the responsibility of the H&S Department:

1. Develop and maintain all elements of the ERPP.
2. Develop and coordinate all training required by the ERPP.
3. Ensure the ERPP meets or exceeds all regulatory requirements.
4. Ensure the ERPP remains current.
5. Develop and coordinate emergency response drills.
6. Act as the liaison, along with ABEINSA EPC Project Management, with Community Emergency Response Organizations (i.e. Fire Dept., Police Dept., etc.).
7. Serve as the Incident Commander(s) in emergency situations.
8. Provide an overview of the information contained in this plan to all project personnel via site orientation.

6.3 Emergency Response Coordinators

Initially the Emergency Response Coordinator (ERC) for **Alpha** is Jorge Daniel Collado Alvarez who will set up the incident command post and place responsibilities within the team. The ERC is responsible for coordination of response activities, including contacting outside agencies, notification of management, and containment of hazard (if safely possible) and initiation of personnel evacuation. The construction director will assume this role upon arrival and receive a proper briefing prior to the arrival of emergency services. The ERC may report to an outside Emergency Agency's Response Coordinator if an agency takes over (i.e. the Fire Department).

1. **Emergency Response Coordinator:** Jorge Daniel Collado Alvarez
   Cell Phone: (314) 488-7221
2. **Emergency Response Coordinator:** Leonardo Bruno Carrero
   Cell Phone: (949) 572-9254
3. **Alternate Emergency Response Coordinator:** Enrique Valades Nieto
   Cell Phone: (314) 420-9367
4. **Alternate Emergency Response Coordinator:** Bruce Asaro
   Cell Phone: (661) 754-6023

Initially the Emergency Response Coordinator (ERC) for **Beta** is Bruce Asaro, who will set up the incident command post and place responsibilities within the team. The ERC is responsible for coordination of response activities, including contacting outside agencies, notification of management, and containment of hazard (if safely possible) and initiation of personnel evacuation. The construction director will assume this role upon arrival and receive a proper briefing prior to the arrival of emergency services. The ERC may report to an outside Emergency Agency's Response Coordinator if an agency takes over (i.e. the Fire Department).

1. **Emergency Response Coordinator:** Bruce Asaro
   Cell Phone: (661) 754-6023
2. **Emergency Response Coordinator:** Leonardo Bruno Carrero
   Cell Phone: (949) 572-9254
3. **Alternate Emergency Response Coordinator:** Enrique Valades Nieto
   Cell Phone: (314) 420-9367
4. **Alternate Emergency Response Coordinator:** Jorge Daniel Collado Alvarez Cell Phone: (314) 488-7221
5.

6.4 Abeinsa EPC Activity Managers

All Abeinsa EPC Activity Managers are required to assist personnel in the event of an emergency as well as perform various other duties with regard to this Emergency Response and Preparedness Program. Activity Managers will lead all immediate search efforts and report emergency issues to the H&S Manager and

Incident Commander. Additional duties of the Activity Managers are outlined below.

6.5 Subcontractors

Each subcontractor shall obtain a copy of the ABEINSA EPC Mojave environmental, health and safety requirements applicable to their work.
The subcontractor will be responsible for ensuring each employee receives and comprehends the information in this plan prior to beginning work on site.
The subcontractor shall keep records indicating who has been given the information.
In the event there is a change of personnel in the subcontractor's work force, the subcontractor is responsible for providing any new employees with this information and maintaining all necessary records.

7.0 Procedures

7.1 Evacuations

When an evacuation is deemed necessary, there shall be no hesitation in requiring personnel to immediately vacate the area affected. Emergency exits and other means of egress from all areas have been identified in Appendix 03, of the Emergency Response and Preparedness Plan. An emergency phone list is provided in Appendix 01. Assembly areas are pre-determined and have been identified in Appendix 03. Once out of the affected area, workers will not be allowed to return until the emergency (or Evacuation Drill) is formally declared over by the Emergency Response Coordinator.

Localized area evacuations will be identified by the location affected.

The following Local Area Evacuation Identification(s) will be communicated when only a limited area or multiple areas are required to evacuate:
:

Alpha Offices, Alpha Power Block (APB), Alpha West, Alpha East, Alpha Mojavito, TAB, Beta West, Beta Offices, Beta Power Block (BPB), Beta East (West of BPB), Beta East (East of BPB).

If an Evacuation is required, per an announcement by the Construction Director, H&S Manager or Emergency Response Coordinator:

1. The Emergency Response Coordinator will sound the assembly alarm, **Five (5) 10 second blasts, 10 seconds apart** (Air Horns), in addition to verbal, phone, electronic devices and radio alerts, to notify all affected personnel to evacuate to the Assembly Area. For the annual evacuation drill, an announcement: "This is an Evacuation Drill" will precede each blast and all other communications.

2. Activity Managers will instruct all employees in the area affected to move to the nearest Assembly Area in an orderly manner (east of the main gate in Alpha and south of the main gate in Beta and south of TAB in Beta West). Appointed evacuation team leaders will ensure shut down of HVAC/air handling systems, external generators, etc. and that windows and doors are closed. Everyone in the affected area is to evacuate. Report to the Emergency Response Coordinator or Incident Commander that: "All affected multiplex office trailers, bathrooms, outhouses and lunch rooms are clear of personnel."

3. Security will curtail non-emergency vehicle traffic into the affected area and account for all delivery vehicles leaving. An unobstructed entry into the site will be maintained by Security for emergency vehicle access. Security will meet emergency responders at the intersection of Harper Lake and Lockhart and provide an escort to the affected area.

4. Activity Managers and Supervisors will inform and account for their assigned Sub Contractors and their employees to ensure that all have left the work areas affected and proceeded to the assigned assembly area. Each subcontractor must assign a point person who will be responsible for acting as their warden.

5. Security will respond to the Assembly Area(s) and take head counts. Security will then relay this information back to the Emergency Response Coordinator or Incident Commander. If a person is missing from the roster, then it will be up to the Emergency Response Coordinator or Incident Commander to decide next steps. After taking head count of personnel, each warden will report back to their activity manager for verification.

6. In the absence of one of the Activity Managers, the remaining Supervisors or emergency response team leaders will fill in for the missing Activity Manager and cover the evacuation duties accordingly.

7. If needed H&S and emergency response search teams will provide area "sweeps" in order to assist in accounting for all personnel. Areas will only be searched if it is determined to be safe. If the decision is made to initiate a search, emergency response search teams will be assigned to "sweep" designated areas in all affected site locations where Abeinsa EPC employees and subcontractors are presently known to be working, (office trailers, conference rooms, restrooms, electrical/electronic rooms and lunch rooms, etc.). Each search team will be assigned a leader, who will record and supply the names of all team members and search area to the Emergency Response Coordinator. The search team leader is responsible for assuring that his/her team members complete their "sweep" safely and do not stray from their specific assigned search area.

8. The Activity Managers shall report any issues encountered to the Emergency Response Coordinator or Incident Commander. Such issues may be:

- Any person who did not evacuate to the Assembly Area;
- Any person who became injured and was unable to evacuate; and
- Any disabled person who was unable to evacuate.
- Location and type of problem and/or damage.

9. The Activity Managers shall remain at the Assembly Area to assist Security in completing a head count for the Emergency Response Coordinator or Incident Commander. Security will use current sign-in sheets and the card scanning system for ABEINSA EPC Mojave employees and Subcontractors to account for all employees to ensure that they have left their work areas and evacuated to the assigned assembly area.

10. Everyone is to remain at the Assembly Area until notice is given by the Site Emergency Coordinator or his designee as to the disposition of the evacuation, and whether to return to the building/work site or not.

11. The Temporary Assembly Building (TAB) will follow their approved evacuation plan. The TAB evacuation team will also be responsible for all employees and subcontractors located in Beta West. Abeinsa EPC employees and subcontractors located in Beta West shall report to the Tab Muster Points. Assigned emergency response team members will be organized for a search of the area if required.

The all clear process will include communication via verbal, phone, electronic devices, radio and Three (3) - 10 second blasts from an air horn.

Note - If a person refuses to evacuate in an emergency, Abeinsa EPC personnel should not argue with the person, but merely inform him that you will be reporting his failure to comply to the Incident Commander and to his/her Supervisor.

7.2 Personal Injury or Illness

Report - all injuries to the Health and Safety Supervisor or the Health and Safety Technician immediately upon discovery.
Evaluate - the area surrounding the injured employee for unsafe conditions. Quickly assess the extent of the injury and inform the site EMT if any assistance is required.

Site EMT. Phone – (813) 618-0790

If the injury or illness is deemed serious, call 911 for assistance. Be sure to give them your:

- Name

- Exact Location: **Mojave Solar Project: 42134 Harper Lake Road, Hinkley CA 92347.**
- Nature of the Emergency (include as much detail about the ill person as known)
- Remain on the line until 911 has all the necessary information.
- Assist Security in maintaining a clear pathway for Project EMT Medic and outside Emergency Medical Service personnel.
- If Air rescue is needed the coordinates of Landing Area are:
  - Lat. 35d 00'41.12771 N
  - Long. 117d 18'23.24321 W

If the injury is minor and offsite medical attention is warranted, transport the employee to designated hospital. In the event of electrical shock, ensure the circuit is de-energized before touching victim. Administer emergency first aid only if safe to do so, using the below guidelines:

- If the victim is conscious, ensure you have permission to help.
- If victim has stopped breathing, perform CPR and use the AED if necessary.
- Stop bleeding by applying pressure directly to wound.
- Single use, disposable gloves such as surgical or examination gloves shall be used for procedures involving contact with patient's bodily fluids.
- Do not attempt to move victim unless there is an imminent danger.
- Keep victim warm to help reduce the potential of shock until ambulance arrives.
- Send any available individual to meet ambulance at the front gate and direct them to accident scene.

7.3 Security Threat

Do Not Attempt to Locate or Handle any Suspicious Device.
The person receiving the threat:

- Remain calm
- Keep the caller on line as long as possible to obtain the most information you can. Document the conversation.

Report – Security threats should immediately be reported to the ERC. If the ERC determines a threat then take command of the situation and direct the following steps:

1. Notify local law enforcement via (760) 256-1796 or if no answer call 911.
2. Determine the course of action in conjunction with local authorities.
3. If evacuation is decided, be referred to point 7.1
4. Do not discuss that a security threat has been declared.
5. During the evacuation, report any unusual packages or containers that seems out of place to the Emergency Response Coordinator.

7.4 Fires

It has been demonstrated that individuals who have been intensively drilled in the proper procedure to follow in a fire emergency, will react swiftly and correctly to minimize the dangers to themselves and their fellow employees. Information on each of the following steps should be followed.

Report - Fires discovered on site shall be immediately reported to the Emergency Response Coordinator.

Evaluate - If the fire is small enough so as not to endanger personnel, determine the appropriate fire extinguisher and attempt to extinguish the fire.

If the fire is beyond the person's capability to safely extinguish, the Emergency Response Coordinator shall be notified:

12. **Initiate -** The Emergency Response Coordinator will then, sound the assembly alarm, **Five 10 second blast, 20 seconds apart** (Air Horns), in addition to electronic device and radio alerts, to notify all personnel of the problem. Alert the Fire Department via (760) 253-7704. If there is no answer then use 911. The Emergency Response Coordinator will direct Security to meet emergency responders at the intersection of Harper Lake and Lockhart and provide an escort to the affected area. An available employee will also be directed to meet the Fire Department and Security at the gate to direct and escort them to the fire scene and the water tanks. The entrance gates shall be kept unobstructed to allow emergency vehicle access. If the condition warrants, the Facility Emergency Coordinator shall evacuate all unnecessary personnel from the site and if necessary, follow the Evacuation Plan, point 7.1

7.5 Severe Weather

Warnings of electrical storms, high winds, flooding, and freezing that have the potential to impact the safety of a community are typically distributed by the local government emergency organization via radio and television stations. In the event any employee becomes aware of a severe weather warning, the Facility Emergency Coordinator and Health and Safety Supervisor must be notified.

Report - Announce to on site personnel the severe weather condition, and determine if the office trailers provide shelter or if Evacuation of site personnel is necessary or if it is safe for everyone to be sent home for the remainder of the shift. The Facility Emergency Coordinator will also determine what other precautions will be taken to ensure the safety of personnel and reduce property loss.

Evaluate - During the severe weather occurrence, all on site personnel shall assess the safety of their work location immediately. The following examples of this assessment:

- High winds – have the potential to dislodge and lift heavy objects and reduce visibility.

- Flooding – areas inundated with flowing water should not be crossed.
- Lightning – stay clear of power lines, metal fences, and other conductive structures. During Lightning activity close to the Site, all crane and high lift activity shall be stopped.
- Freezing – outside floor areas, ladders, and walkways may be slippery from ice.

Initiate – It may become necessary to seek shelter, evacuate the site, administer first aid, call in emergency assistance, initiate a Site shutdown and send everyone home or modify Site operations. The Facility Emergency Coordinator will announce changes to site work activities as conditions warrant. Do not restart equipment that tripped offline until the specific cause of the trip is known and addressed.

7.6 Earthquakes

In the case of an earthquake large enough to either have caused damage or thought to have the potential of causing damage:

Report: – To the Construction Director, Health and Safety Manager or direct supervisor after the event. If you are indoors, stay indoors. Lie to the side of a solid piece of furniture, such as a desk or table. Stay clear of windows, mirrors, bookshelves, and file cabinets. If you are outside, inform employees to get out into the open, away from equipment, buildings, mirrors and power lines. If safe; stay in your vehicle and move only to get away from danger. Please await further instructions. This message shall be communicated via verbal, electrical devices, phone and radio.

Evaluate – Following the earthquake, and if deemed safe to do so by the Emergency Response Coordinator, Abeinsa EPC Activity Managers will conduct a thorough site inspection to determine:

- Injured, missing, or trapped personnel (site personnel and contractors)
- Safety hazards caused by the earthquake, such as fires, downed power lines, damaged equipment, etc.

If the decision is made to initiate a search, teams must be assigned to designated areas for search. Each search team will be assigned a leader, and the names recorded. The search team leader is responsible for assuring that his/her team members stay in their specific area.

Initiate – Following thorough site inspections, it may become necessary to evacuate the site, administer first aid, call in emergency assistance, and initiate a Site shutdown. The Facility Emergency Coordinator will announce changes to site work activities as conditions warrant. Do not restart equipment that tripped offline during the earthquake until the specific cause of the trip is known and addressed.

7.7 Hazardous Chemical Spills Leaks

Even in a well-planned and executed program, the possibility exists that an accident will occur and an emergency spill or toxic chemical release will take place. Recognition of this possibility requires suitable emergency procedures be prepared beforehand, and shall be communicated to all affected personnel. Each separate facility location/project must consider the potential implications resulting from an emergency spill or a toxic chemical release and shall design methods for identifying, eliminating, isolating, or controlling the potential hazard as part of the site emergency response plan. If you cannot identify or are not familiar with the liquid and its chemical properties, vacate the area, keep other personnel away from the area and contact the supervisor. Regardless of the type of spill and magnitude the person who detects the spill must remain calm and follow this plan in an orderly manner.

1. **Emergency Response Coordinator:** Kirk Anderson,
   Cell Phone: (661) 754-6180
2. **Emergency Response Coordinator:** Leonardo Bruno Carrero
   Cell Phone: (949) 572-9254
3. **Alternate Emergency Response Coordinator:** Enrique Valades Nieto Cell Phone: (314) 420-9367
4. **Alternate Emergency Response Coordinator:** Jorge Daniel Collado Alvarez Cell Phone: (314) 488-7221
5. **Alternate Emergency Response Coordinator:** Bruce Asaro
   Cell Phone: (661) 754-6023

7.7.1 Spill Containment:

A. Identify spill source and assess hazard
   - Ensure all persons in the area are safe.
   - Assess hazards from the spill.
   - Read the Material Safety Data Sheet (MSDS) for the spilled material and follow all safety measures.
   - Check for fire and explosion risk
   - Extinguish all ignition sources in the area
   - Move machinery only if safe to do so or shut down.
   - Isolate all running equipment to prevent sparks.

B. If applicable, the isolation of the spill area shall be attempted
   - Ensure that necessary safety equipment is worn.
   - Stop the source
   - Attempt to contain the spill

C. Authorities to contact to report a spill
   - Foreman
   - Supervisor

- Activity Manager
- Environmental, Safety and Management Personnel:
  - Kirk Anderson, Environmental Engineer
    Cell Phone: (661) 754-6180
  - Kristine Yates, Logistics Manager
    Cell Phone: (661) 754-6756
  - Luis Leal, Resident Engineer
    Cell Phone: (661) 754-5134
  - Leonardo Bruno Carrero, Construction Director
    Cell Phone: (949) 572-925

D. Location to go in case of a spill:
   - If required or unsure of what to do; go directly to your nearest Assembly Area or where the ERC designates.

7.7.2 Record

A "Spill Reporting Form" must be completed anytime there is a spill larger than 5 gallons. Blank forms are available from the HSE Supervisor and the Environmental Engineer. Spill Reporting Forms will be used as a record to track all significant spills on areas under the control of the Abeinsa EPC Mojave. Any spill that results in a release of materials equal to or greater than the "Reportable Quantity", as specified in the Material Safety Data Sheet, must also be reported immediately to the local regulatory agency (San Bernardino County Fire Department), General Partnership and must be kept by the HSE Supervisor and the Environmental Engineer. Corrective actions will be implemented by management based on information contained on the Spill Reports.

8.0 Public Relations

A central spokesperson shall ensure that only informed and consistent information is made public regarding the activities. Additional details should follow to be clear on this communication.

8.1 Media Inquiry Procedure

All inquiries or requests for interviews from the news media (broadcast or print) shall be referred directly to the ABEINSA EPC Mojave Site Construction Director and immediately communicated to ASLLC (Frederick Redell, General Manager). ABEINSA EPC Mojave or subcontractor personnel receiving calls from reporters, regardless of the nature of their inquiry, should respond with the following statement:

"I appreciate your interest and would like to get you the information you need. All public information is handled from our

home office. Please leave me your telephone number and I can have someone get back with you as soon as possible."

ABEINSA EPC Mojave or subcontractor personnel receiving media inquiries shall notify the ABEINSA EPC Mojave Site Construction Director immediately. ABEINSA EPC Mojave or subcontractor personnel should not provide a "no comment" statement, nor should they ask the reporter if they can make an "off the record" statement. "No comment" is normally interpreted as an admission of guilt, and all statements ABEINSA EPC Mojave personnel make to the media are considered authorized information.

9.0 Communication of Emergencies

1. A combination of radio devices, cell phones and air horns will be used to alert personnel on the project of an emergency situation until the Fire Protection and alarm system is in place. At that moment this plan will be updated in order to include the new situation.
2. Once notified, the emergency team will perform a call down to the Activity Manager's and respective subcontractor groups.
3. H&S personnel will go to designated positions to disseminate appropriate communication up to and including initial and final area "sweeps" to ensure all personnel have been notified to the emergency.
4. Incident Command and H&S will collaborate and provide clear direction including the **"all clear"** by verbal, phone, radio, and finally **with 3 - 10 second blasts of the air horn.**
5. Use of air horns for bird control or non-emergency isolated communication will be **short 1 second blast,** preceded by verbal notification in the area of use and prior notice through phone, electronic device and/or radio to the S&H department and all other affected departments.

10.0 Appendix

6007-PEM-ATM-79-00-0001 – Appendix 01 – Emergency Phone List
6007-PEM-ATM-79-00-0001 – Appendix 02 – Area Search Team List
6007-PEM-ATM-79-00-0001 – Appendix 03 – Emergency Routes

"Rundquist, Dale@Energy"
05/02/2014 11:15 AM

Send To	"Steven.Pochmara@abeinsaepc.abengoa.com" <Steven.Pochmara@abeinsaepc.abengoa.com>
cc	"pablo.schenone@abeinsaepc.abengoa.com" <pablo.schenone@abeinsaepc.abengoa.com>, "mercedes.macias@abeinsaepc.abengoa.com" <mercedes.macias@abeinsaepc.abengoa.com>, "larry.davis@abeinsaepc.abengoa.com" <larry.davis@abeinsaepc.abengoa.com>,
bcc	
Subject	RE: HAZ2-04-00

Send to:	"Steven.Pochmara@abeinsaepc.abengoa.com" <Steven.Pochmara@abeinsaepc.abengoa.com>
cc:	"pablo.schenone@abeinsaepc.abengoa.com" <pablo.schenone@abeinsaepc.abengoa.com>, "mercedes.macias@abeinsaepc.abengoa.com" <mercedes.macias@abeinsaepc.abengoa.com>, "larry.davis@abeinsaepc.abengoa.com" <larry.davis@abeinsaepc.abengoa.com>,
Subject:	RE: HAZ2-04-00

History: This memo has been replied

Hi Steven,
The Submittal for HAZ-2-04-00, Revised HMBP chemicals added for chemical pipe cleaning, has been reviewed and approved by staff.
Thank you,
Dale R.

From: Steven.Pochmara@abeinsaepc.abengoa.com [mailto:Steven.Pochmara@abeinsaepc.abengoa.com]

Sent: Thursday, May 01, 2014 11:44 AM
To: Rundquist, Dale@Energy; Rundquist, Dale@Energy
Cc: pablo.schenone@abeinsaepc.abengoa.com; mercedes.macias@abeinsaepc.abengoa.com; larry.davis@abeinsaepc.abengoa.com; kirk.anderson@abeinsaepc.abengoa.com; kristine.yates@abeinsaepc.abengoa.com; vernon.leeming@abeinsaepc.abengoa.com; enrique.valades@abeinsaepc.abengoa.com; lbruno@abeinsaepc.abengoa.com; Luis.Leal@abeinsaepc.abengoa.com; holmes.bassette@solar.abengoa.com; william.grisolia@solar.abengoa.com; Kathleen.Sullivan@solar.abengoa.com; frances.sanchez@solar.abengoa.com
Subject: HAZ2-04-00

Good Morning Dale,
Please find attached a copy of the revised HMBP for review and approval. The revised plan now includes the chemicals that will be used for the chemical pipe cleaning process at the steam generator. Please contact me if you have any questions.

Regards,

Steven Pochmara - Permit Manager

ABEINSA EPC
13911 Park Avenue, Suite 208
Victorville, CA 92392
Cell: +14802871419
Steven.Pochmara@teyma.abengoa.com
www.teyma.com

Eco-Tip: Printing e-mails is usually a waste.

**********Internet Email Confidentiality Footer**********

This email and any files transmitted with it are confidential and intended solely for the use of the organization or individual to whom they are addressed. It is expressly forbidden to retransmit or copy email and/or this attached files without our permission. If you are not the addressee indicated in this message (or responsible for delivery of the message to such person), you may not copy or deliver this message to anyone. In such case, you should destroy this message and kindly notify the sender by reply email. Please advise immediately if you or your employer does not consent to Internet email for messages of this kind. Opinions, conclusions and other information in this message that do not relate to the official business of my firm shall be understood as neither given nor endorsed by it.

****** Confidencialidad de Correo electr?nico de Internet ******

Este correo electr?nico y cualquier archivo transmitido con el, es confidencial y destinado exclusivamente para el empleo de la organizaci?n o el individuo a quien esta dirigido. Esta expresamente prohibido su reenvio o copia del correo electr?nico y/o de los archivos anexados sin permiso del remitente. El contenido esta protegido seg?n la regulaci?n sobre la Protecci?n de Datos e Informaci?n Personal. Si usted no es el destinatario indicado en este mensaje (o responsable de la entrega del mensaje a tal persona), no puede copiar, reenviar o entregar este mensaje. En tal caso, usted debe destruir este mensaje y notificar al remitente por el correo electr?nico de respuesta. Puede notificar igualmente si no desea recibir correos electr?nicos de esta clase. Las opiniones, conclusiones y otra informaci?n en este mensaje que no se relaciona con la actividad de la compa??a ni ser?n entendidas como autorizadas por ?sta.

ABENER TEYMA MOJAVE

LETTER OF TRANSMITTAL

Date: April 25, 2014
Subject: Mojave Solar Project
Condition Number: WASTE-10
Reference: HTF Contaminated Soil Analysis
To: Mr. Dale Rundquist, CPM
California Energy Commission

WE ARE SENDING YOU

☒ Attached ☐ Under separate cover via _____ the following items:

☐ Shop Drawings ☐ Prints ☐ Plans ☐ Samples ☐ Specifications
☐ Copy of Letter ☐ Change Order ☐

COPIES	DATE	NO.	DESCRIPTION
1	4/25/14	1	Cover Letter to CEC
1	4/25/14	1	Spill Lab Results

THESE ARE TRANSMITTED as checked below:

☒ For Approval
☐ For your use
☐ As requested
☐ For review
☐ Approved as submitted
☐ Approved as noted
☐ Returned for corrections
☐ For review and comment

REMARKS _____

COPY TO: File SIGNED BY: Steven Pochmara

Steven Pochmara
ABEINSA EPC

ABENER TEYMA MOJAVE

13911 Park Ave, Suite 208
Victorville, CA 92392
Phone: 480-287-1419

Subject:	Mojave Solar Project (09-AFC-5C)
Condition No.:	WASTE-10
Description:	HTF Contaminated Soil Lab Results
Submittal No.:	WASTE10-00-00

April 25, 2014

Mr. Dale Rundquist, CPM
California Energy Commission
1516 Ninth Street (MS-2000)
Sacramento, CA 95814
drundqui@energy.state.ca.us

Dear Mr. Rundquist,

Please see attached showing lab results for the HTF contaminated soil per condition of certification WASTE-10. Since there were numerous small spills (approximately 30), it was determined that a composite sample would best represent the situation The sample is a composite of the initial HTF spills that occurred in the period of early March 2014 to early April 2014. Per the compliance, the results have also been sent to the DTSC. The results indicate an amount of 1,830 ppm of hydrocarbon, below the 10,000 ppm limit specified in the compliance.

Should you have any questions or need any additional information, please do not hesitate to contact me.

Sincerely,



Steven Pochmara
ABEINSA EPC
13911 Park Ave, Suite 208
Victorville, CA 92392
Cell: (480) 287-1419

Enviro – Chem, Inc.
1214 E. Lexington Avenue, Pomona, CA 91766 Tel (909) 590-5905 Fax (909) 590-5907

Date: April 25, 2014

Mr. Mike Gurnee
Environmental & Chemical Consulting, Inc.
P.O. Box 3264
Crestline, CA 92325
Tel(909)771-4842 Email:Mike@ECCInc.US

Project: **Mojave Solar**
Lab I.D.: **140418-1**

Dear Mr. Gurnee:

The **analytical results** for the soil sample, received by our lab on April 18, 2014, are attached. The sample was received chilled, intact and accompanying chain of custody record.

Enviro-Chem appreciates the opportunity to provide you and your company this and other services. Please do not hesitate to call us if you have any questions.

Sincerely,

Curtis Desilets
Vice President/Program Manager

Andy Wang
Laboratory Manager

Enviro – Chem, Inc.
1214 E. Lexington Avenue, Pomona, CA 91766 Tel (909) 590-5905 Fax (909) 590-5907

LABORATORY REPORT

CUSTOMER: Environmental & Chemical Consulting, Inc.
P.O. Box 3264
Crestline, CA 92325
Tel(909)771-4842 Email:Mike@ECCInc.US

PROJECT: Mojave Solar
SAMPLING DATE:04/17/14
MATRIX:SOIL
REPORT TO:MR. MIKE GURNEE

DATE RECEIVED:04/18/14
DATE ANALYZED:04/24/14
DATE REPORTED:04/25/14

TOTAL RECOVERABLE PETROLEUM HYDROCARBONS (TRPH) ANALYSIS
METHOD: EPA 418.1
UNIT: mg/Kg = MILLIGRAM PER KILOGRAM = PPM

SAMPLE I.D.	LAB I.D.	TRPH RESULT	DF
Bio Soil	140418-1	1830	5
METHOD BLANK	---	ND	1
	PQL	10	

COMMENTS:
DF = Dilution factor
PQL = Practical Quantitation Limit
Actual Detection Limit = PQL X DF
ND = Below The Actual Detection Limit or Non-Detected
TRPH = Total Recoverable Petroleum Hydrocarbons

DATA REVIEWED AND APPROVED BY: _____
CAL-DHS ELAP CERTIFICATE No.: 1555

Enviro-Chem, Inc.
1214 E. Lexington Avenue, Pomona, CA 91766
Tel (909)590-5905 Fax (909)590-5907

Matrix: SOLID/SLUDGE

QA/QC Report

Analysis	Units	Date Analyzed	Sample I.D.	S.R.	Duplicate	% RPD	ACP %RPD
Alkalinity	mg/Kg	11/26/2008	081126-9	303.0	323.0	6.4%	0-20
Residual Chlorine	mg/Kg	10/29/2009	091029-3	108.00	108.00	0.0%	0-20
Density	g/mL					0.00%	0-20
EC	umhos/cm	4/22/2014	140422-2	5532	5571	0.7%	0-20
pH	pH units	4/22/2014	140422-2	7.65	7.62	0.4%	0-20
TDS	mg/L	11/26/2008	081125-29	181	184	1.6%	0-20
TSS	mg/Kg					0.0%	0-20
Resistivity	ohms	4/22/2014	140422-2	181	180	0.6%	0-20
% Moisture	%	8/10/2010	100810-19	22.2	22.7	2.2%	0-20
BTU	BTU/lb	7/22/2010	100722-4	14377	14489	0.8%	0-20
Salinity	S					0.00%	0-20

%RPD = Relative Percent Difference **ACP %RPD** = Acceptable Relative Percent Difference

Analysis	Units	Date Analyzed	Sample I.D.	Spk Conc	S.R.	ACP %RPD	ACP %RC	MS	MS %RC	MSD	MSD %RC	% RPD
Acidity	mg/Kg					0	80-120					
Ammonia as N	mg/Kg	7/30/2010	100729-6	50.0	0.933	0-20	80-120	45.9	90%	44	86%	3.8%
MBAS	mg/Kg			6.00		0-20	80-120					#VALUE!
Chloride	mg/Kg	4/25/2014	LCS1/2	200	0.0	0-20	80-120	169	85%	174	87%	2.5%
COD	mg/Kg			500		0-20	80-120					#VALUE!
Cr VI	mg/Kg	4/16/2014	LCS1/2	4.0	0.000	0-20	80-120	3.74	94%	3.71	93%	0.8%
Cyanide	mg/wipe	4/18/2014	140418-28	10.0	0.000	0-20	80-120	8.43	84%	8.39	84%	0.4%
Fluoride	mg/Kg	7/12/2010	LCS1/2	10.0	0.000	0-20	80-120	8.53	85%	8.10	81%	4.3%
Nitrate as N	mg/Kg	4/18/2014	140417-69	4.0	0.00	0-20	80-120	3.37	84%	3.46	87%	2.3%
Nitrite as N	mg/Kg	4/18/2014	140417-69	4.0	0.00	0-20	80-120	3.65	91%	3.73	93%	2.0%
Oil and Grease	mg/Kg	8/5/2010	LCS3/4	667	0.0	0-20	80-120	567	85%	667	100%	15.0%
Phenolics	mg/Kg					0-20	80-120					
Sulfate	mg/Kg	4/25/2014	LCS1/2	200	0.00	0-20	80-120	186	93%	189	95%	1.5%
Sulfide	mg/Kg	4/18/2014	140418-28	3.00	0.0	0-20	80-120	2.82	94%	2.87	96%	1.7%
TRPH	mg/Kg	4/24/2014	LCS1/2	667	0.0	0-20	80-120	633	95%	644	97%	1.6%
Sulfide, Reactive	mg/Kg	1/29/2010	100129-36	3.00	0.0	0-20	80-120	2.53	84%	2.63	88%	3.3%
EPA 1664A	mg/Kg	3/8/2010	LCS3/4	500	0.0	0-20	80-120	435	87%	425	85%	2.0%

S.R. = Sample Results **%RC** = Percent Recovery **ACP %RC** = Accepted Percent Recovery

Analyst Signature: _____

Final Reviewer: _____

Enviro-Chem, Inc. Laboratories
1214 E. Lexington Avenue,
Pomona, CA 91766
Tel: (909) 590-5905 Fax: (909) 590-5907
CA-DHS ELAP CERTIFICATE #1555

Turnaround Time
0 Same Day
0 24 Hours
0 48 Hours
0 72 Hours
0 1 Week (Standard)
Other:

Misc./PO#

SAMPLE ID	LAB ID	SAMPLING DATE	SAMPLING TIME	MATRIX	No. OF CONTAINERS	TEMPERATURE	PRESERVATION	Analysis Required: TRPH	COMMENTS
Bio Soil	Yesterday 140418-1	4/17	10:15	SOIL	2		None	X	

Company Name: Environmental & Chemical Consulting
Address: 1431 S. Gage St.
City/State/Zip: San Bernardino, CA 92408

Project Contact: Mike Mojave Solar
Tel: (909) 771-4842
Fax/Email: Mike@ecc.inc.us

Sampler's Signature:
Project Name/ID: Mojave Solar

Relinquished by:
Relinquished by:
Relinquished by:

Received by:
Received by:
Received by:

Date & Time: 4/18/14 0808
Date & Time:
Date & Time:

Instructions for Sample Storage After Analysis:
O Dispose of O Return to Client O Store (30 Days)
O Other:

CHAIN OF CUSTODY RECORD

Date:

WHITE WITH SAMPLE • YELLOW TO CLIENT

"Rundquist, Dale@Energy"
05/22/2014 07:34 AM

Send To	"Steven.Pochmara@abeinsaepc.abengoa.com" <Steven.Pochmara@abeinsaepc.abengoa.com>
cc	"larry.davis@abeinsaepc.abengoa.com" <larry.davis@abeinsaepc.abengoa.com>, "kirk.anderson@abeinsaepc.abengoa.com" <kirk.anderson@abeinsaepc.abengoa.com>, "manjunath.shivalingappa@abeinsaepc.abengoa.com"
bcc	
Subject	RE: WASTE10-01-00 DTSC approval for HTF contaminated soil

Hi Steven,
The Submittal for WASTE-10-01-00 (DTSC Approval for HTF Contaminated Soil) has been reviewed and approved by staff.
Thank you,
Dale R.

From: Steven.Pochmara@abeinsaepc.abengoa.com [mailto:Steven.Pochmara@abeinsaepc.abengoa.com]

Sent: Friday, May 16, 2014 11:32 AM
To: Rundquist, Dale@Energy; Rundquist, Dale@Energy
Cc: larry.davis@abeinsaepc.abengoa.com; kirk.anderson@abeinsaepc.abengoa.com; manjunath.shivalingappa@abeinsaepc.abengoa.com; vernon.leeming@abeinsaepc.abengoa.com; kristine.yates@abeinsaepc.abengoa.com; holmes.bassette@solar.abengoa.com; Kathleen.Sullivan@solar.abengoa.com; william.grisolia@solar.abengoa.com
Subject: WASTE10-01-00 DTSC approval for HTF contaminated soil

Good Morning Dale,
I had sent this to you earlier this week but wanted to resend with an assigned number. Please see the response below per WASTE-10 from the DTSC indicating that they don't consider the on site HTF contaminated soil hazardous. Let me know if staff has had a chance to review the lab results I sent on April 25, 2014, thanks.

Regards,

Steven Pochmara - Permit Manager

ABEINSA EPC
13911 Park Avenue, Suite 208
Victorville, CA 92392
Cell: +14802871419

Steven.Pochmara@teyma.abengoa.com

www.teyma.com

Eco-Tip: Printing e-mails is usually a waste.

----- Forwarded by Steven Pochmara/AbeinsaEPC/Abengoa on 05/12/2014 11:39 AM -----
"Misemer, Mary@DTSC"
05/12/2014 11:14 AM

Send To: "'Steven.Pochmara@abeinsaepc.abengoa.com'" <Steven.Pochmara@abeinsaepc.abengoa.com>
cc: "'vernon.leeming@abeinsaepc.abengoa.com'" <vernon.leeming@abeinsaepc.abengoa.com>
Subject: RE: MSDS for HTF

Hi Steven,

After reviewing the MSDS, it looks like in it's pure form, it can present an inhalation hazardous, but when you have that small amount mixed with a great deal of dire, it is reasonable to assume that the mixture will not exhibit the characteristic to be hazardous waste.

From: Steven.Pochmara@abeinsaepc.abengoa.com [mailto:Steven.Pochmara@abeinsaepc.abengoa.com]

Sent: Monday, May 12, 2014 8:13 AM
To: Misemer, Mary@DTSC
Cc: vernon.leeming@abeinsaepc.abengoa.com
Subject: RE: MSDS for HTF

Good Morning Mary,
Sorry for the confusion but the test that was submitted was for HTF contaminated soil, not for pure HTF. To date, we have approximately 20- 55 gallon barrels of contaminated soil that was mixed with small HTF spills. All spills were cleaned up per regulations and the lab results I sent to you were samples from these barrels. Please let me know what the next steps are to proceed.

Regards,

Steven Pochmara - Permit Manager

ABEINSA EPC
13911 Park Avenue, Suite 208
Victorville, CA 92392
Cell: +14802871419
Steven.Pochmara@teyma.abengoa.com
www.teyma.com
Eco-Tip: Printing e-mails is usually a waste.

"Misemer, Mary@DTSC"
05/12/2014 08:02 AM

Send To: "'Steven.Pochmara@abeinsaepc.abengoa.com'" <Steven.Pochmara@abeinsaepc.abengoa.com>
cc:
Subject: RE: MSDS for HTF

Looks like it fails the Toxicity test for Inhalation 22CCR 66261.24(a)(5)
From the MSDS

11. TOXICOLOGICAL INFORMATION

This product has been tested for toxicity. Results from Solutia sponsored studi
literature are described below.
Acute animal toxicity data
Oral: LD50 , rat, 2,050 mg/kg , No more than slightly toxic
Dermal: LD50 , rabbit, > 5,010 mg/kg , Practically nontoxic after skin applicatio
studies.
Inhalation: LC50 , rat, 2.66 mg/l , 4 h, Toxic based on animal inhalation exposu
Skin irritation: rabbit , Slightly irritating to skin., 24 h
Repeat dose toxicity: rat, , inhalation, 13 weeks, , Produced effects on body we
and/or organ weights in repeat dose studies.
Repeat dose toxicity: rat, , gavage, 26 weeks, , Produced effects on body weig
and/or organ weights in repeat dose studies. Effects only observed at very high
liver, spleen. Repeat dose toxicity: rat, , diet, subchronic, , Repeated oral expos
changes in animal models. Target organs affected liver, kidneys Developmenta
observed in laboratory animals in the presence of maternal toxicity. Product na
Page 6.
Solutia Inc. Material Safety Data Sheet Date: 05/18/2012
Reference Number: 000000000211 Version 5.4/E
Mutagenicity: No genetic effects were observed in standard tests using bacteria
Components Data from Solutia studies and/or the available scientific literature
been identified as hazardous chemicals under the criteria of the OSHA Hazard
910.1200) or the Canadian Hazardous Products Act are discussed below. Biph
cause headache, fatigue, nausea, indigestion, abdominal pain, tremor, central a
Slightly toxic following oral administration.
Practically nontoxic after skin application in animal studies.
Practically non irritating to skin (rabbit).
Slightly irritating to eyes (rabbit). No mortality or signs of toxicity at the highest le
irritating to respiratory system in animal models. Produced effects on body weig
epeat dose studies.

From: Steven.Pochmara@abeinsaepc.abengoa.com[mailto:Steven.Pochmara@abeinsaepc.abengoa.com]
Sent: Friday, May 09, 2014 11:47 AM
To: Misemer, Mary@DTSC
Cc: vernon.leeming@abeinsaepc.abengoa.com; kirk.anderson@abeinsaepc.abengoa.com; manjunath.shivalingappa@abeinsaepc.abengoa.com; larry.davis@abeinsaepc.abengoa.com
Subject: MSDS for HTF

Good Morning Mary,
Please find attached the MSDS for the HTF (Heat Transfer Fluid) as discussed on our phone call this morning. Please let me know if you require any further information.

Regards,

Steven Pochmara - Permit Manager

ABEINSA EPC
13911 Park Avenue, Suite 208
Victorville, CA 92392
Cell: +14802871419
Steven.Pochmara@teyma.abengoa.com
www.teyma.com
Eco-Tip: Printing e-mails is usually a waste.

**********Internet Email Confidentiality Footer**********

This email and any files transmitted with it are confidential and intended solely for the use of the organization or individual to whom they are addressed. It is expressly forbidden to retransmit or copy email and/or this attached files without our permission. If you are not the addressee indicated in this message (or responsible for delivery of the message to such person), you may not copy or deliver this message to anyone. In such case, you should destroy this message and kindly notify the sender by reply email. Please advise immediately if you or your employer does not consent to Internet email for messages of this kind. Opinions, conclusions and other information in this message that do not relate to the official business of my firm shall be understood as neither given nor endorsed by it.

****** Confidencialidad de Correo electr?nico de Internet ******

Este correo electr?nico y cualquier archivo transmitido con el, es confidencial y destinado exclusivamente para el empleo de la organizaci?n o el individuo a quien esta dirigido. Esta expresamente prohibido su reenvio o copia del correo electr?nico y/o de los archivos anexados sin permiso del remitente. El contenido esta protegido seg?n la regulaci?n sobre la Protecci?n de Datos e Informaci?n Personal. Si usted no es el destinatario indicado en este mensaje (o responsable de la entrega del mensaje a tal persona), no puede copiar, reenviar o entregar este mensaje. En tal caso, usted debe destruir este mensaje y notificar al remitente por el correo electr?nico de respuesta. Puede notificar igualmente si no desea recibir correos electr?nicos de esta clase. Las opiniones, conclusiones y otra informaci?n en este mensaje que no se relaciona con la actividad de la compa??a ni ser?n entendidas como autorizadas por ?sta.

**********Internet Email Confidentiality Footer**********

This email and any files transmitted with it are confidential and intended solely for the use of the organization or individual to whom they are addressed. It is expressly forbidden to retransmit or copy email and/or this attached files without our permission. If you are not the addressee indicated in this message (or responsible for delivery of the message to such person), you may not copy or deliver this message to anyone. In such case, you should destroy this message and kindly notify the sender by reply email. Please advise immediately if you or your employer does not consent to Internet email for messages of this kind. Opinions, conclusions and other information in this message that do not relate to the official business of my firm shall be understood as neither given nor endorsed by it.

****** Confidencialidad de Correo electr?nico de Internet ******

Este correo electr?nico y cualquier archivo transmitido con el, es confidencial y destinado exclusivamente para el empleo de la organizaci?n o el individuo a quien esta dirigido. Esta expresamente prohibido su reenvio o copia del correo electr?nico y/o de los archivos anexados sin permiso del remitente. El contenido esta protegido seg?n la regulaci?n sobre la Protecci?n de Datos e Informaci?n Personal. Si usted no es el destinatario indicado en este mensaje (o responsable de la entrega del mensaje a tal persona), no puede copiar, reenviar o entregar este mensaje. En tal caso, usted debe destruir este mensaje y notificar al remitente por el correo electr?nico de respuesta. Puede notificar igualmente si no desea recibir correos electr?nicos de esta clase. Las opiniones, conclusiones y otra informaci?n en este mensaje que no se relaciona con la actividad de la compa??a ni ser?n entendidas como autorizadas por ?sta.

**********Internet Email Confidentiality Footer**********

This email and any files transmitted with it are confidential and intended solely for the use of the organization or individual to whom they are addressed. It is expressly forbidden to retransmit or copy email and/or this attached files without our permission. If you are not the addressee indicated in this message (or responsible for delivery of the message to such person), you may not copy or deliver this message to anyone. In such case, you should destroy this message and kindly notify the sender by reply email. Please advise immediately if you or your employer does not consent to Internet email for messages of this kind. Opinions, conclusions and other information in this message that do not relate to the official business of my firm shall be understood as neither given nor endorsed by it.

****** Confidencialidad de Correo electrónico de Internet ******

Este correo electrónico y cualquier archivo transmitido con el, es confidencial y destinado exclusivamente para el empleo de la organización o el individuo a quien esta dirigido. Esta expresamente prohibido su reenvio o copia del correo electrónico y/o de los archivos anexados sin permiso del remitente. El contenido esta protegido según la regulación sobre la Protección de Datos e Información Personal. Si usted no es el destinatario indicado en este mensaje (o responsable de la entrega del mensaje a tal persona), no puede copiar, reenviar o entregar este mensaje. En tal caso, usted debe destruir este mensaje y notificar al remitente por el correo electrónico de respuesta. Puede notificar igualmente si no desea recibir correos electrónicos de esta clase. Las opiniones, conclusiones y otra información en este mensaje que no se relaciona con la actividad de la compañía ni serán entendidas como autorizadas por ésta.

noreply
05/09/2014 10:36 AM

Send To	steven.pochmara@abeinsaepc.abengoa.com
cc	
bcc	
Subject	DTSC FTP File Receipt Notification

Mary Misemer at DTSC has received the file 9497_HTF Soils 4-25-14.pdf that you sent.

Please do not respond to this email.

ABEINSA EPC

Steven Pochmara
05/12/2014 11:44 AM

Send To	drundqui@energy.state.ca.us, drundqui@energy.ca.gov, drundqui@energy.state.ca.us, drundqui@energy.ca.gov,
cc	Larry Davis/AbeinsaEPC/Abengoa@Abengoa, Kirk Anderson/AbeinsaEPC/Abengoa@Abengoa, Manjunath Shivalingappa/AbeinsaEPC/Abengoa@Abengoa, Vernon Leeming/AbeinsaEPC/Abengoa@Abengoa, Kristine Yates/AbeinsaEPC/Abengoa@ABENGOA, Holmes Bassette/Solar/Abengoa@Abengoa, Kathleen Larry Davis/AbeinsaEPC/Abengoa@Abengoa, Kirk Anderson/AbeinsaEPC/Abengoa@Abengoa, Manjunath Shivalingappa/AbeinsaEPC/Abengoa@Abengoa, Vernon Leeming/AbeinsaEPC/Abengoa@Abengoa, Kristine Yates/AbeinsaEPC/Abengoa@ABENGOA, Holmes Bassette/Solar/Abengoa@Abengoa, Kathleen
bcc	
Subject	WASTE10-01-00 DTSC approval for HTF contaminated soil

Good Morning Dale,
I had sent this to you earlier this week but wanted to resend with an assigned number. Please see the response below per WASTE-10 from the DTSC indicating that they don't consider the on site HTF contaminated soil hazardous. Let me know if staff has had a chance to review the lab results I sent on April 25, 2014, thanks.

Regards,

Steven Pochmara - Permit Manager

ABEINSA EPC
13911 Park Avenue, Suite 208
Victorville, CA 92392
Cell: +14802871419
Steven.Pochmara@teyma.abengoa.com
www.teyma.com

Eco-Tip: Printing e-mails is usually a waste.

----- Forwarded by Steven Pochmara/AbeinsaEPC/Abengoa on 05/12/2014 11:39 AM -----
"Misemer, Mary@DTSC"
05/12/2014 11:14 AM

Send To:	"'Steven.Pochmara@abeinsaepc.abengoa.com'" <Steven.Pochmara@abeinsaepc.abengoa.com>
cc:	"'vernon.leeming@abeinsaepc.abengoa.com'" <vernon.leeming@abeinsaepc.abengoa.com>
Subject:	RE: MSDS for HTF

Hi Steven,

After reviewing the MSDS, it looks like in it's pure form, it can present an inhalation hazardous, but when you have that small amount mixed with a great deal of dire, it is reasonable to assume that the mixture will not exhibit the characteristic to be hazardous waste.

From: Steven.Pochmara@abeinsaepc.abengoa.com [mailto:Steven.Pochmara@abeinsaepc.abengoa.com]

Sent: Monday, May 12, 2014 8:13 AM
To: Misemer, Mary@DTSC

Cc: vernon.leeming@abeinsaepc.abengoa.com
Subject: RE: MSDS for HTF

Good Morning Mary,
Sorry for the confusion but the test that was submitted was for HTF contaminated soil, not for pure HTF. To date, we have approximately 20- 55 gallon barrels of contaminated soil that was mixed with small HTF spills. All spills were cleaned up per regulations and the lab results I sent to you were samples from these barrels. Please let me know what the next steps are to proceed.

Regards,

Steven Pochmara - Permit Manager

ABEINSA EPC
13911 Park Avenue, Suite 208
Victorville, CA 92392
Cell: +14802871419
Steven.Pochmara@teyma.abengoa.com
www.teyma.com
Eco-Tip: Printing e-mails is usually a waste.

"Misemer, Mary@DTSC"
05/12/2014 08:02 AM

Send To: "'Steven.Pochmara@abeinsaepc.abengoa.com'" <Steven.Pochmara@abeinsaepc.abengoa.com>
cc:
Subject: RE: MSDS for HTF

Looks like it fails the Toxicity test for Inhalation 22CCR 66261.24(a)(5)
From the MSDS

11. TOXICOLOGICAL INFORMATION

This product has been tested for toxicity. Results from Solutia sponsored studi
literature are described below.
Acute animal toxicity data
Oral: LD50 , rat, 2,050 mg/kg , No more than slightly toxic
Dermal: LD50 , rabbit, > 5,010 mg/kg , Practically nontoxic after skin applicatio
studies.
Inhalation: LC50 , rat, 2.66 mg/l , 4 h, Toxic based on animal inhalation exposu
Skin irritation: rabbit , Slightly irritating to skin., 24 h
Repeat dose toxicity: rat, , inhalation, 13 weeks, , Produced effects on body we
and/or organ weights in repeat dose studies.
Repeat dose toxicity: rat, , gavage, 26 weeks, , Produced effects on body weig
and/or organ weights in repeat dose studies. Effects only observed at very high
liver, spleen. Repeat dose toxicity: rat, , diet, subchronic, , Repeated oral expos
changes in animal models. Target organs affected liver, kidneys Developmenta
observed in laboratory animals in the presence of maternal toxicity. Product na
Page 6.
Solutia Inc. Material Safety Data Sheet Date: 05/18/2012
Reference Number: 000000000211 Version 5.4/E
Mutagenicity: No genetic effects were observed in standard tests using bacteria
Components Data from Solutia studies and/or the available scientific literature
been identified as hazardous chemicals under the criteria of the OSHA Hazard
910.1200) or the Canadian Hazardous Products Act are discussed below. Biph
cause headache, fatigue, nausea, indigestion, abdominal pain, tremor, central a
Slightly toxic following oral administration.
Practically nontoxic after skin application in animal studies.
Practically non irritating to skin (rabbit).
Slightly irritating to eyes (rabbit). No mortality or signs of toxicity at the highest le
irritating to respiratory system in animal models. Produced effects on body weig
epeat dose studies.

From: Steven.Pochmara@abeinsaepc.abengoa.com [mailto:Steven.Pochmara@abeinsaepc.abengoa.com]

Sent: Friday, May 09, 2014 11:47 AM
To: Misemer, Mary@DTSC
Cc: vernon.leeming@abeinsaepc.abengoa.com; kirk.anderson@abeinsaepc.abengoa.com; manjunath.shivalingappa@abeinsaepc.abengoa.com; larry.davis@abeinsaepc.abengoa.com
Subject: MSDS for HTF

Good Morning Mary,
Please find attached the MSDS for the HTF (Heat Transfer Fluid) as discussed on our phone call this morning. Please let me know if you require any further information.

Regards,

Steven Pochmara - Permit Manager

ABEINSA EPC
13911 Park Avenue, Suite 208
Victorville, CA 92392
Cell: +14802871419
Steven.Pochmara@teyma.abengoa.com
www.teyma.com

Eco-Tip: Printing e-mails is usually a waste.

**********Internet Email Confidentiality Footer**********

This email and any files transmitted with it are confidential and intended solely for the use of the organization or individual to whom they are addressed. It is expressly forbidden to retransmit or copy email and/or this attached files without our permission. If you are not the addressee indicated in this message (or responsible for delivery of the message to such person), you may not copy or deliver this message to anyone. In such case, you should destroy this message and kindly notify the sender by reply email. Please advise immediately if you or your employer does not consent to Internet email for messages of this kind. Opinions, conclusions and other information in this message that do not relate to the official business of my firm shall be understood as neither given nor endorsed by it.

****** Confidencialidad de Correo electr?nico de Internet ******

Este correo electr?nico y cualquier archivo transmitido con el, es confidencial y destinado exclusivamente para el empleo de la organizaci?n o el individuo a quien esta dirigido. Esta expresamente prohibido su reenvio o copia del correo electr?nico y/o de los archivos anexados sin permiso del remitente. El contenido esta protegido seg?n la regulaci?n sobre la Protecci?n de Datos e Informaci?n Personal. Si usted no es el destinatario indicado en este mensaje (o responsable de la entrega del mensaje a tal persona), no puede copiar, reenviar o entregar este mensaje. En tal caso, usted debe destruir este mensaje y notificar al remitente por el correo electr?nico de respuesta. Puede notificar igualmente si no desea recibir correos electr?nicos de esta clase. Las opiniones, conclusiones y otra informaci?n en este mensaje que no se relaciona con la actividad de la compa??a ni ser?n entendidas como autorizadas por ?sta.

**********Internet Email Confidentiality Footer**********

This email and any files transmitted with it are confidential and intended solely for the use of the organization or individual to whom they are addressed. It is expressly forbidden to retransmit or copy email and/or this attached files without our permission. If you are not the addressee indicated in this message (or responsible for delivery of the message to such person), you may not copy or deliver this message to anyone. In such case, you should destroy this message and kindly notify the sender by reply email. Please advise immediately if you or your employer does not consent to Internet email for messages of this kind. Opinions, conclusions and other information in this message that do not relate to the official business of my firm shall be understood as neither given nor endorsed by it.

****** Confidencialidad de Correo electr?nico de Internet ******

Este correo electr?nico y cualquier archivo transmitido con el, es confidencial y destinado exclusivamente para el empleo de la organizaci?n o el individuo a quien esta dirigido. Esta expresamente prohibido su reenvio o copia del correo electr?nico y/o de los archivos anexados sin permiso del remitente. El contenido esta protegido seg?n la regulaci?n sobre la Protecci?n de Datos e Informaci?n Personal. Si usted no es el destinatario indicado en este mensaje (o responsable de la entrega del mensaje a tal persona), no puede copiar, reenviar o entregar este mensaje. En tal caso, usted debe destruir este mensaje y notificar al remitente por el correo electr?nico de respuesta. Puede notificar igualmente si no desea recibir correos electr?nicos de esta clase. Las opiniones, conclusiones y otra informaci?n en este mensaje que no se relaciona con la actividad de la compa??a ni ser?n entendidas como autorizadas por ?sta.

Report Number	Date of Incident	Spill Location	Incident Time	Contractor Responsible	Product	Quanity	Soil Amt Removed
1	3.3.14	beta/row/128J/3N	3.15pm	Proimtu	Therminol VP1	1/8 Gal.	1 shovel
2	3.4.14	beta/row123J/3N	12.15pm	Proimtu	Therminol VP1	1/8 Gal.	1 shovel
3	3.11.14	Beta/102I/4N	11.50am	Proimtu	Therminol VP1	1/16 Gal	half shovel
4	3.11.14	AE / row110d/3N	3:20pm	Proimtu	Therminol VP1	1/8 Gal.	2 Shovels
5	3.11.14	AE / row 110 B / 1N	3:15pm	Proimtu	Therminol VP1	1/8 Gal.	3 shovels
6	3.11.14	AE / row 109 H / 3N	4:00pm	Proimtu	Therminol VP1	1/8 Gal.	2 Shovels
7	3.12.14	AE / row 109 H / 3N	3:00pm	Proimtu	Therminol VP1	1/8 Gal.	2 Shovels
8	3.12.14	AE / row 112 H/ 1N	3:15pm	Proimtu	Therminol VP1	1/8 Gal.	2 Shovels
9	3.13.14	AE/ row114H / 1N	11:ooam	Proimtu	Therminol VP1	1/8 Gal.	2 Shovels
10	3.17.14	AE / row 128H /3N	11:00am	Proimtu	Therminol VP1	1/8 Gal.	2 Shovels
11	3.17.14	AE / row 128H/2N	11:00am	Proimtu	Therminol VP1	1/8 Gal.	1 shovel
12	3.19.14	AE/ row 144F /4S	1:15pm	Proimtu	Therminol VP1	1/8 Gal.	2 Shovels
13	3.20.14	AE / row 148G /1N	10:44am	Proimtu	Therminol VP1	1 Pint	1 1/2 Shovels
14	3.21.14	AE/row150H/5S	10:50am	Proimtu	Therminol VP1	1/8 Gal.	1 Shovel
15	3.21.14	Beta/row70J/2N	4:35pm	Proimtu	Therminol VP1	1/8 Gal.	1 Shovel
16	3.22.14	AE/row160EF	10:46am	Proimtu	Therminol VP1	1 Pint	2 Shovels
17	3.22.14	AE/row 159G /valve1	10:20am	Proimtu	Therminol VP1	1/2 Pint	1/2 Shovel
18	3.24.14	AE/row 164G / HP1ma	10.00am	Proimtu	Therminol VP1	1/2 Pint	2.5 shovels
19	3.24.14	AE/ row 168G/3N	3.00pm	Proimtu	Therminol VP1	1/2 Pint	1.5 shovels
20	3.24.14	Beta/ row 63J/1N	843pm	Proimtu	Therminol VP1	1/4 pint	1/2 shovel
21	3.27.14	AE/ row 184H/S4	1005am	Proimtu	Therminol VP1	pint	1 shovel
22	3.28.14	AE/row 192F/main line	1035am	Proimtu	Therminol VP1	quart	3 shovels
23	3.28.14	AE/row 195H/4N	215pm	Proimtu	Therminol VP1	1/2 pint	1/2 shovel
24	3.31.14	BE/row4G/main line	2.50 pm	Proimtu	Therminol VP1	1/2 quart	3 shovels
25	4.1.14	BE/row53E/1S	4.30 pm	Proimtu	Therminol VP1	1 pint	2 shovels
26	4.1.14	alpha unloading area	3.15 pm	Proimtu	Therminol VP1	1.5 gal	10 shovels
27	4.1.14	AW/row 61C/ML	2.30 pm	Proimtu	Therminol VP1	1 quart	4 shovels
28	4.1.14	AW/row64D/3 S	2.05 pm	Proimtu	Therminol VP1	1/2 pint	1 shovel
29	4.1.14	BE/ row 54E/1N	4.32 pm	Proimtu	Therminol VP1	1 quart	4 shovels
30	4.2.14	BE/row60E/2N	1.00 pm	Proimtu	Therminol VP1	1/2 quart	2.5 shovels
31	4.2.14	AW/60C / 5N	12.30 pm	Proimtu	Therminol VP1	1/2 quart	2.5 sholvels
32	4.2.14	AW/59C/3N	11.20am	Proimtu	Therminol VP1	1/2 pint	1.5 shovels
33	4.3.14	AW/52D/2S	1030 am	Proimtu	Therminol VP1	1/4 pint	1/4 shovel
34	4.4.14	AW/37D/1N	1.00 pm	Proimtu	Therminol VP1	1 pint	1 shovel
35	4.4.14	BE/76E/3S	2.05 pm	Proimtu	Therminol VP1	3/4 pint	1 shovel
36	4.7.14	BE/row 122G/3N	2.15 pm	Proimtu	Therminol VP1	1 1/2 pint	3 shovels
37	4.7.14	BE/row 123 F /4 N	2.15 pm	Proimtu	Therminol VP1	1/2 pint	1 1/2 shovel
38	4.8.14	AW / row 25 B / 1 S	10.10 am	Proimtu	Therminol VP1	1/2 quart	5 shovels
39	4.8.14	BE/ row 118 h / 3 S	11.05 am	Proimtu	Therminol VP1	1/4 pint	1/2 shovel
40	4.8.14	BE/ 115 G/ 1S	2.55 pm	Proimtu	Therminol VP1	1/2 pint	2 shovels
41	4.9.14	BE/row 109 H / 3N	11.05 am	Proimtu	Therminol VP1	1/2 pint	1 1/2 shovels
42	4.9.14	BE/row 105 E/4S	3.06 pm	Proimtu	Therminol VP1	5 drops	1/4 shovel
43	4.11.14	BE /row 93f / 4N	9.05am	Proimtu	Therminol VP1	1/8 pint	1 shovel
44	4.11.14	BE/row 3 main header	9.30 am	Proimtu	Therminol VP1	3/4 quart	5 shavoel
45	4.15.14	AW/row 16e/4N	9.45 am	Proimtu	Therminol VP1	1/8 pint	1/4 shovel
46	4.15.14	Alpha overflow	10.00 am	Proimtu	Therminol VP1	1.5 gallon	8 shovels
47	4.16.14	BE/row 106D / 5S	12.00pm	Proimtu	Therminol VP1	1 pint	1 shovel
48	4.17.14	BE/ row 106 C /5 N	9.30 am	Proimtu	Therminol VP1	1/16 pint	1 shovel
49	4.17.14	BE / row 99C/5S	3.30 pm	Proimtu	Therminol VP1	1/16 pint	1 shovel
50	4.23.14	BE / row 72A /5N	8.47am	Proimtu	Therminol VP1	1ounce	3 pints
51	4.23.14	BE / row 73 C / 5N	8.50 am	Proimtu	Therminol VP1	1 ounce	3 pints
52	4.23.14	BE / row 68A /5 N	12.20 pm	Proimtu	Therminol VP1	2 ounces	1 quart
53	4.24.14	BE / row 63 a / 5N	9.43 am	Proimtu	Therminol VP1	1/2 pint	1.5 quarts

68							
69							
70							
71							
72							
73							
74							
75							
76							
77							
78							
79							
80							
81							
82							
83							
84							
85							
86							
87							
88							
89							
90							
91							
92							
93							
94							
95							
96							
97							
98							
99							
100							
101							
102							
103							
104							
105							
106							
107							
108							
109							
110							
111							
112							
113							
114							
115							
116							
117							
118							
119							
120							
121							
122							

151							
152							
153							
154							
155							
156							
157							
158							
159							
160							
161							
162							
163							
164							
165							
166							
167							
168							
169							
170							
171							
172							
173							
174							
175							
176							
177							
178							
179							
180							
181							
182							
183							
184							
185							
186							
187							
188							
189							
190							
191							
192							
193							
194							
195							
196							
197							
198							
199							
200							
201							
202							
203							
204							
205							

234							
235							
236							
237							
238							
239							
240							
241							
242							
243							
244							
245							
246							
247							
248							
249							
250							
251							
252							
253							
254							
255							
256							
257							
258							
259							
260							
261							
262							
263							
264							
265							
266							
267							
268							
269							
270							
271							
272							
273							
274							
275							
276							
277							
278							
279							
280							
281							
282							
283							
284							
285							
286							
287							
288							

Report Number:
58

Environmental Spill/Release Report

alpha HTF overflow area

Section I. General Information

Date of Incident	5/1/14	Date Reported	5/1/14	Incident Time.	11:15 am
Employee(s) Involved:	Abacus				
Contracting Company:	Abacus				

Section II. Incident Description

Name of the Material Spilled/Released:	Therminol® VP1			
Components in Material(s): Include CAS #'s when relevant.	%	ESH Chem	CERCLA Chem	RQlbs
Diphenyl Ether	73.5			
Biphenyl	26.5			

What was the time duration of the spill/release?							
What was the quantity of the material spilled or released?	1 pint	☐ Gallons	☐ Liters	☐ Pounds			
What were the weather conditions at the time of the spill/release (wind direction, cloud cover, precipitation, temp, etc.)?	Sunny						
What was the spill released to?							
☐ Air	☐ Irrigation Canals	☐ Storm Water					
☐ Chemical Sewer	☒ Land	☐ Other:					
Is external agency required to be notified?		☐	Yes	☒	No		
Did the spill/release exceed an air or NPDES permit and/or leave the site? If yes, please explain below.		☐	Yes	☒	No		

Abacus was changing out a bad gauage on one of the HTF line. Abacus employee was told the line had nitrogen and no HTF so he started taking the gauage off and some HTF came out so they call me and my guys cleaned it up and steak it
Location (the east side of the HTF overflow area)

Provide a description of what happened (time line), corrective measures taken, and preventive measures:

Dirt removed 1/2 quart
Put into a 5gal bucket
Dump into a 55gal barrel
Taken to the LTU and put on Secondary Containment

Estimated cost of cleanup:	TBD

ABEINSA EPC

Report Number:

Environmental Spill/Release Report

Section III. Form Completion

This Environmental Spill/Release Report was prepared by:

Print Name:	Company:	Job Title:	Date:
Terry Baker	Abeinsa EPC	H&S field supervisor	5/1/14
Sign Name (handwritten or electronic signature is acceptable):			

Section IV. Notifications-

Forward all Completed Documentation to one or all of the following.

*Required	Larry Davis OH&S Manager	Larry.Davis@abeinsaepc.abengoa.com	480.370.7063
	Terry Baker OH&S Site Supervisor	Terry.Baker@abeinsaepc.abengoa.com	480.236.2954
	Kirk Anderson Environmental Engineer	Kirk.Anderson@abeinsaepc.abengoa.com	661.754.6180
	Kristine Yates Logistics Coordinator	Kristine.Anderson@abeinsaepc.abengoa.com	661.754.6756

*Required Environmental Spill/Release Reports.

Section V. Abeinsa EPC Internal

Is a PRR/IRP required?	☐	Yes	☒	No
If so, initiate the process and provide PRR/IRP number:	☐	Yes	☒	No

Report Number:
#59

Environmental Spill/Release Report

alpha east

Section I: General Information

Date of Incident:	5/8/14	Date Reported:	5/8/14	Incident Time:	12:45 pm
Employee(s) Involved:	Abeinsa commissioning				
Contracting Company:	Abeinsa commissioning				

Section II: Incident Description

Name of the Material Spilled/Released:	Therminol (R) VP1			
Components in Material(s): Include CAS #'s when relevant.	%	ESH Chem	CERCLA Chem	RQlbs
Diphenyl Ether	73.5			
Biphenyl	26.5			

What was the time duration of the spill/release?		
What was the quantity of the material spilled or released?	8	☒ Gallons ☐ Liters ☐ Pounds
What were the weather conditions at the time of the spill/release (wind direction, cloud cover, precipitation, temp, etc.)?	Sunny	

What was the spill released to?

☐	Air	☐	Irrigation Canals	☐	Storm Water
☐	Chemical Sewer	☒	Land	☐	Other:

Is external agency required to be notified?	☐	Yes	☒	No
Did the spill/release exceed an air or NPDES permit and/or leave the site? If yes, please explain below.	☐	Yes	☒	No

They was on row 126 E F G H draining the line of HTF fluid. They hooked the argon gas to the line at the main HTF line at the other end. Abacus pipefitter left ~~the~~ and no one was watching it. Cory came down to look at it and it was misting HTF from the argon line. They stop the argon gas and my guys clean it up and steam it

Provide a description of what happened (time line), corrective measures taken, and preventive measures:

(location row 126 E, F, G, and H by main HTF line in field)
Dirt removed 3 55gal barrels
shovel into a 55gal barrel
Taken to the LTDF and put on secondary containment

Estimated cost of cleanup:	TBD

ABEINSA EPC

Report Number:

Environmental Spill/Release Report

Section III. Form Completion

This Environmental Spill/Release Report was prepared by:

Print Name:	Company:	Job Title:	Date:
Terry Baker	Abeinsa EPC	H&S field supervisor	5/8/14
Sign Name (handwritten or electronic signature is acceptable):			

Section IV. Notifications-

Forward all Completed Documentation to one or all of the following:

*Required	Larry Davis OH&S Manager	Larry.Davis@abeinsaepc.abengoa.com	480.370.7063
	Terry Baker OH&S Site Supervisor	Terry.Baker@abeinsaepc.abengoa.com	480.236.2954
	Kirk Anderson Environmental Engineer	Kirk.Anderson@abeinsaepc.abengoa.com	661.754.6180
	Kristine Yates Logistics Coordinator	Kristine.Anderson@abeinsaepc.abengoa.com	661.754.6756

*Required Environmental Spill/Release Reports.

Section V. Abeinsa EPC Internal

Is a PRR/IRP required?	☐	Yes	☒	No
If so, initiate the process and provide PRR/IRP number:	☐	Yes	☒	No

ABEINSA EPC

Report Number:
#60 -

Environmental Spill/Release Report

beta

Section I. General Information					
Date of Incident:	5/12/14	Date Reported:	5/12/14	Incident Time:	11:30am
Employee(s) Involved:	Commissoning field AbeinsaEPC				
Contracting Company:	Commissoning field AbeinsaEPC				

Section II. Incident Description				
Name of the Material Spilled/Released:	Therminol (R) VP-1			
Components in Material(s): Include CAS #'s when relevant.	%	ESH Chem	CERCLA Chem	RQlbs
Diphenyl Ether	73.5			
Biphenyl	26.5			
What was the time duration of the spill/release?				
What was the quantity of the material spilled or released?	10	☒ Gallons	☐ Liters	☐ Pounds
What were the weather conditions at the time of the spill/release (wind direction, cloud cover, precipitation, temp, etc.)?	Sunny			

What was the spill released to?

☐	Air	☐	Irrigation Canals	☐	Storm Water
☐	Chemical Sewer	☒	Land	☐	Other:

Is external agency required to be notified?	☐	Yes	☒	No
Did the spill/release exceed an air or NPDES permit and/or leave the site? If yes, please explain below.	☐	Yes	☒	No

They was removing the pipe at the end of the HTF main line. They said that it only had nitogen in the line so they pulled it apart and HTF came out of both ends of the pipe. my guy cleaned the leak up and steaked it

(location row 128 ABCD by the HTF main line in field)

Provide a description of what happened (time line), corrective measures taken, and preventive measures:

Dirt removed 4 55 gal barrel
Put into a 5 gal bucket
Dump into a 55 gal barrel

Taken to the LTU and put on Seconday containment

Estimated cost of cleanup: TBD

ABEINSA EPC

Report Number:

Environmental Spill/Release Report

Section III. Form Completion			
This Environmental Spill/Release Report was prepared by:			
Print Name:	Company:	Job Title:	Date:
Terry Baker	Abeinsa EPC	H&S field supervisor	5/12/14
Sign Name (handwritten or electronic signature is acceptable):	Terry Baker		

Section IV. Notifications-			
Forward all Completed Documentation to one or all of the following:			
*Required	Larry Davis OH&S Manager	Larry.Davis@abeinsaepc.abengoa.com	480.370.7063
	Terry Baker OH&S Site Supervisor	Terry.Baker@abeinsaepc.abengoa.com	480.236.2954
	Kirk Anderson Environmental Engineer	Kirk.Anderson@abeinsaepc.abengoa.com	661.754.6180
	Kristine Yates Logistics Coordinator	Kristine.Anderson@abeinsaepc.abengoa.com	661.754.6756

*Required Environmental Spill/Release Reports.

Section V. Abeinsa EPC Internal				
Is a PRR/IRP required?	☐	Yes	☒	No
If so, initiate the process and provide PRR/IRP number:	☐	Yes	☒	No

ABEINSA EPC

Report Number:
#42

Environmental Spill/Release Report

beta

Section I. General Information					
Date of Incident:	5/14/14	Date Reported:	5/14/14	Incident Time:	11:05 am
Employee(s) Involved:	Abeinsa EPC Commissoning				
Contracting Company:	Abeinsa EPC Commissioning				

Section II. Incident Description				
Name of the Material Spilled/Released:	Therminol (R) VP 1			
Components in Material(s): Include CAS #'s when relevant.	%	ESH Chem	CERCLA Chem	RQlbs
Diphenyl Ether	73.5			
Biphenyl	26.5			

What was the time duration of the spill/release?						
What was the quantity of the material spilled or released?	3 1/2	☒ Gallons	☐ Liters	☐ Pounds		
What were the weather conditions at the time of the spill/release (wind direction, cloud cover, precipitation, temp, etc.)?	Sunny					
What was the spill released to?						
☐ Air	☐ Irrigation Canals	☐ Storm Water				
☐ Chemical Sewer	☒ Land	☐ Other:				
Is external agency required to be notified?		☐	Yes	☒	No	
Did the spill/release exceed an air or NPDES permit and/or leave the site? If yes, please explain below.		☐	Yes	☒	No	

Commissioning was draining line on row 101 ABCD. Commissioning hooked up the argon gas and my guys was watch the end by the tote. The Commissioning employees left the argon took up unattended and running my ~~guy~~ lead Trent went to check argon gas and the line came off. Trent stop it and the guys clecen it up and steak it

Provide a description of what happened (time line), corrective measures taken, and preventive measures:

(location row 101 ABCD by HTF main line in the field)
Dirt removed 1 55gal barrel
Put into a 5gal bucket
Dump into a 55gal barrel
Taken to the LTF and put on secondary containment

Estimated cost of cleanup:	TBD

ABEINSA EPC

Report Number:

Environmental Spill/Release Report

Section III. Form Completion			
This Environmental Spill/Release Report was prepared by:			
Print Name:	Company:	Job Title:	Date:
Terry Baker	Abeinsa EPC	H&S field supervisor	5/14/14
Sign Name (handwritten or electronic signature is acceptable):	Terry Baker		

Section IV. Notifications-			
Forward all Completed Documentation to one or all of the following:			
*Required	Larry Davis OH&S Manager	Larry.Davis@abeinsaepc.abengoa.com	480.370.7063
	Terry Baker OH&S Site Supervisor	Terry.Baker@abeinsaepc.abengoa.com	480.236.2954
	Kirk Anderson Environmental Engineer	Kirk.Anderson@abeinsaepc.abengoa.com	661.754.6180
	Kristine Yates Logistics Coordinator	Kristine.Anderson@abeinsaepc.abengoa.com	661.754.6756

*Required Environmental Spill/Release Reports.

Section V. Abeinsa EPC Internal				
Is a PRR/IRP required?	☐	Yes	☒	No
If so, initiate the process and provide PRR/IRP number:	☐	Yes	☒	No

ABEINSA EPC

Report Number:
61

Environmental Spill/Release Report

beta

Section I. General Information					
Date of Incident:	5/14/14	Date Reported:	5/14/14	Incident Time:	11:00 am
Employee(s) Involved:	Abeinsa EPC Commissioning				
Contracting Company:	Abeinsa EPC Commissioning				

Section II. Incident Description				
Name of the Material Spilled/Released:	Therminol® VP-1			
Components in Material(s): Include CAS #'s when relevant.	%	ESH Chem	CERCLA Chem	RQlbs
Diphenyl Ether	73.5			
Biphenyl	26.5			

What was the time duration of the spill/release?						
What was the quantity of the material spilled or released?	1 1/2	☒ Gallons	☐ Liters	☐ Pounds		
What were the weather conditions at the time of the spill/release (wind direction, cloud cover, precipitation, temp, etc.)?	Sunny					
What was the spill released to?						
☐ Air	☐ Irrigation Canals	☐ Storm Water				
☐ Chemical Sewer	☒ Land	☐ Other:				
Is external agency required to be notified?			☐	Yes	☒	No
Did the spill/release exceed an air or NPDES permit and/or leave the site? If yes, please explain below.			☐	Yes	☒	No

Commissioning employees brought a 3" hose from alpha HTF overflow area to beta HTF overflow area. They puted the 3" hoses out of the back of the buggsy in beta outside of the dirt by the HTF overflow area in the north east corner. My guys cleaned up the leak and steaked it

Provide a description of what happened (time line), corrective measures taken, and preventive measures:

(location beta HTF overflow area in north east corner on the dirt) Dirt removed 12 gal
Put into a 5 gal bucket
Dump into a 55 gal barrel
Taken to the LTU and put on Secondary Containment

Estimated cost of cleanup:	TBD

ABEINSA EPC

Report Number:

Environmental Spill/Release Report

Section III. Form Completion

This Environmental Spill/Release Report was prepared by:

Print Name:	Company:	Job Title:	Date:
Terry Baker	Abeinsa EPC	H&S field supervisor	5/14/14
Sign Name (handwritten or electronic signature is acceptable):			

Section IV. Notifications-

Forward all Completed Documentation to one or all of the following:

*Required	Larry Davis OH&S Manager	Larry.Davis@abeinsaepc.abengoa.com	480.370.7063
	Terry Baker OH&S Site Supervisor	Terry.Baker@abeinsaepc.abengoa.com	480.236.2954
	Kirk Anderson Environmental Engineer	Kirk.Anderson@abeinsaepc.abengoa.com	661.754.6180
	Kristine Yates Logistics Coordinator	Kristine.Anderson@abeinsaepc.abengoa.com	661.754.6756

*Required Environmental Spill/Release Reports.

Section V. Abeinsa EPC Internal

Is a PRR/IRP required?	☐	Yes	☒	No
If so, initiate the process and provide PRR/IRP number:	☐	Yes	☒	No

ABEINSA EPC

Report Number:
#63

Environmental Spill/Release Report

Section I. General Information					
Date of Incident:	5-19-14	Date Reported:	5-19-14	Incident Time:	10:00 AM
Employee(s) Involved:	Roman Woods Dillon Cobb				
Contracting Company:	DMI				

Section II. Incident Description				
Name of the Material Spilled/Released:	Gas			
Components in Material(s): Include CAS #'s when relevant.	%	ESH Chem	CERCLA Chem	RQlbs
What was the time duration of the spill/release?	seconds			
What was the quantity of the material spilled or released?	1/2 cup	☐ Gallons	☐ Liters	☐ Pounds
What were the weather conditions at the time of the spill/release (wind direction, cloud cover, precipitation, temp, etc.)?	Hot dry			

What was the spill released to?

☐	Air	☐	Irrigation Canals	☐	Storm Water
☐	Chemical Sewer	☑	Land	☐	Other:

Is external agency required to be notified?	☐	Yes	☑	No
Did the spill/release exceed an air or NPDES permit and/or leave the site? If yes, please explain below.	☐	Yes	☑	No

1 Gallon Dirt Removal
Alpha/west side of WTP.

Provide a description of what happened (time line), corrective measures taken, and preventive measures:

Gas can spilled some gas in bed of buggy then dripped out of corner. lined buggy bed with plastic so gas cannot escape. Not topping cans off.

Estimated cost of cleanup:

ABEINSA EPC

Report Number:

Environmental Spill/Release Report

Section III. Form Completion			
This Environmental Spill/Release Report was prepared by:			
Print Name:	Company:	Job Title:	Date:
Frank Rich	D.M.I	Safety	5-9-14
Sign Name (handwritten or electronic signature is acceptable):	Z O Z		

Section IV. Notifications-			
Forward all Completed Documentation to one or all of the following:			
*Required	Larry Davis OH&S Manager	Larry.Davis@abeinsaepc.abengoa.com	480.370.7063
	Terry Baker OH&S Site Supervisor	Terry.Baker@abeinsaepc.abengoa.com	480.236.2954
	Kirk Anderson Environmental Engineer	Kirk.Anderson@abeinsaepc.abengoa.com	661.754.6180
	Kristine Yates Logistics Coordinator	Kristine.Anderson@abeinsaepc.abengoa.com	661.754.6756

*Required Environmental Spill/Release Reports.

Section V. Abeinsa EPC Internal				
Is a PRR/IRP required?	☐	Yes	☐	No
If so, initiate the process and provide PRR/IRP number:	☐	Yes	☐	No

ABEINSA EPC

Report Number:
#64

Environmental Spill/Release Report

Section I. General Information					
Date of Incident:	5/20/14	Date Reported:	5/20/14	Incident Time:	8:00 A.M.
Employee(s) Involved:	Germaine Domingeuz.				
Contracting Company:	Abaeus				

Section II. Incident Description				
Name of the Material Spilled/Released:	Diesel Fuel			
Components in Material(s): Include CAS #'s when relevant.	%	ESH Chem	CERCLA Chem	RQlbs
Red Diesel				
Clear Diesel				
What was the time duration of the spill/release?				
What was the quantity of the material spilled or released?	2	☑ Gallons	☐ Liters	☐ Pounds
What were the weather conditions at the time of the spill/release (wind direction, cloud cover, precipitation, temp, etc.)?	20mph Winds, SW, Sunny. Some Clouds, 70°			

What was the spill released to?

☐	Air	☐	Irrigation Canals	☐	Storm Water
☐	Chemical Sewer	☑	Land	☐	Other:

Is external agency required to be notified?	☐	Yes	☐	No
Did the spill/release exceed an air or NPDES permit and/or leave the site? If yes, please explain below.	☐	Yes	☑	No

20 gal Dirt Removed to Drum
Taken to Secondary Containment by T. Bailey

Provide a description of what happened (time line), corrective measures taken, and preventive measures:

Some fuel was spilled during re-fueling activities of equipments and did not have spill containment in place. Correction included, Excavation and Storage of contaminated soil, prevention includes spill containment pans and also will use construction Film to protect soil from future spills

Estimated cost of cleanup:

ABEINSA EPC

Report Number:

Environmental Spill/Release Report

Section III. Form Completion			
This Environmental Spill/Release Report was prepared by:			
Print Name:	Company:	Job Title:	Date:
Germaine Dominguez	Abacus	Equipment Manager	5/20/14
Sign Name (handwritten or electronic signature is acceptable):			

Section IV. Notifications-			
Forward all Completed Documentation to one or all of the following:			
*Required	Larry Davis OH&S Manager	Larry.Davis@abeinsaepc.abengoa.com	480.370.7063
	Terry Baker OH&S Site Supervisor	Terry.Baker@abeinsaepc.abengoa.com	480.236.2954
	Kirk Anderson Environmental Engineer	Kirk.Anderson@abeinsaepc.abengoa.com	661.754.6180
	Kristine Yates Logistics Coordinator	Kristine.Anderson@abeinsaepc.abengoa.com	661.754.6756

*Required Environmental Spill/Release Reports.

Section V. Abeinsa EPC Internal				
Is a PRR/IRP required?	☐	Yes	☐	No
If so, initiate the process and provide PRR/IRP number:	☐	Yes	☐	No

ABEINSA EPC

Report Number:

Environmental Spill/Release Report

beta

Section I. General Information					
Date of Incident:	5/29/14	Date Reported:	5/29/14	Incident Time:	10:20 am
Employee(s) Involved:	Abeinsa Commissioning in the field				
Contracting Company:	Abeinsa Comissioning in the field				

Section II. Incident Description				
Name of the Material Spilled/Released:	Therminol (R) VP1			
Components in Material(s): Include CAS #'s when relevant.	%	ESH Chem	CERCLA Chem	RQlbs
Diphenyl Ether	73.5			
Biphenyl	26.5			
What was the time duration of the spill/release?				
What was the quantity of the material spilled or released?	28	☒ Gallons	☐ Liters	☐ Pounds
What were the weather conditions at the time of the spill/release (wind direction, cloud cover, precipitation, temp, etc.)?	Sunny			

What was the spill released to?

☐	Air	☐	Irrigation Canals	☐	Storm Water
☐	Chemical Sewer	☒	Land	☐	Other:

Is external agency required to be notified?	☐	Yes	☒	No
Did the spill/release exceed an air or NPDES permit and/or leave the site? If yes, please explain below.	☐	Yes	☒	No

Commissioning was filling loops in beta at row 64 A, B, C and D. They was down by the main HTF header pipe and no one way by the end of the row by the tot. The valve was open the hose came out of the tot and went on the ground. They shut valve my guys started clean it up (location row 64 ABCD)

Provide a description of what happened (time line), corrective measures taken, and preventive measures:

Dirt removed 22 barrels
Put into a 55 gal barrel

Taken to the LTU and put on Secondary Containment

Estimated cost of cleanup:	TBD

ABEINSA EPC

Report Number:

Environmental Spill/Release Report

Section III. Form Completion

This Environmental Spill/Release Report was prepared by:

Print Name:	Company:	Job Title:	Date:
Terry Baker	Abeinsa EPC	H&S Field Supervisor	5/29/14
Sign Name (handwritten or electronic signature is acceptable):			

Section IV. Notifications-

Forward all Completed Documentation to one or all of the following:

*Required	Larry Davis OH&S Manager	Larry.Davis@abeinsaepc.abengoa.com	480.370.7063
	Terry Baker OH&S Site Supervisor	Terry.Baker@abeinsaepc.abengoa.com	480.236.2954
	Kirk Anderson Environmental Engineer	Kirk.Anderson@abeinsaepc.abengoa.com	661.754.6180
	Kristine Yates Logistics Coordinator	Kristine.Anderson@abeinsaepc.abengoa.com	661.754.6756

*Required Environmental Spill/Release Reports.

Section V. Abeinsa EPC Internal

Is a PRR/IRP required?	☐	Yes	☒	No
If so, initiate the process and provide PRR/IRP number:	☐	Yes	☒	No

SWPPP SUMMARY- May, 2014

1. Fiber rolls: total installed 24,730ft. Maintenance during the month of May included repairing approximately 25 feet on the North side of Beta East.
2. Swales: total installed 16219 ft. No maintenance required during the month of May.
3. Street sweeping and construction entrances maintenance. Sweeping duties performed weekly and as necessary.
4. Trash collection being taken care of on a daily basis.
5. 5 concrete washout station (2 in beta and 3 in alpha).
6. Dust control - Watering the site with trucks on a daily basis.
7. 0 inches of sand build up on straw wattle

CONSTRUCTION SITE STORMWATER RUNOFF CONTROL INSPECTION FORM

CORRECTIONS REQUIRED PRIOR TO NEXT INSPECTION?	YES	NO	N/A

PROJECT INFORMATION												INSPECTION INFORMATION				
DID #	6	B	3	6	C	3	6	1	7	2	1	DATE:	MAY 1 2014		TIME:	2:30
NAME: Mojave Solar Project												PRE-STORM	POST-STORM	WEEKLY		EXTENDED STORM
ADDRESS: 42134 Harper Lake Rd, Hinkley, CA 92347												RAIN >1/2"	None	Light	Moderate	Heavy
CONTRACTOR: Abener Teyma Mojave												WIND >15mph:	None	Light	Moderate	Heavy
ON-SITE CONTACT: Alberto Salas												TEMPERATURE:	LOW 57°		HIGH 85°	

INSPECTION CHECKLIST

Stormwater Pollution Prevention Plan	Yes	No	Comments
1. Is the SWPPP binder and/or DESCP on site and accessible?	X		Supplemental Form Attached? YES NO NOTE: THE "CONSTRUCTION SITE STORMWATER RUNOFF CONTROL INSPECTION FORM" IS THE ONLY FORM IN USE FOR INSPECTIONS DOCUMENTATION FOR THIS PROJECT.
2. Does the site have a WDID No.?	X		
3. Does the SWPPP address the minimum BMP requirements?	X		
4. Are amendments to the SWPPP clearly documented and dated?	X		STORM ACTIVITY: DEFICIENCIES: N/A
5. Is the current SWPPP complete?	X		
6. Does the SWPPP include a current map accurately indicating BMPs installed at the site?	X		
7. Is routine BMP inspection and maintenance documentation on file?	X		

Soil Stabilization Practices	Yes	No	Comments	
8. Are BMPs implemented on inactive disturbed areas?	X		Alpha West	H.T.F. PIPE INSTALLATION
9. Are implemented BMPs effectively stabilizing soil?	X		Alpha East	POWER BLOCK CONST.
10. Are BMP materials stockpiled and available for use?	X		Beta West	H.T.F. PIPE INSTALLATION
11. Was any erosion observed?		X	Beta East	POWER BLOCK CONST

Sediment Control Practices	Yes	No	Discharge Risk Potential	
12. Are sediment control BMPs in place and maintained?	X		Alpha West	NONE
13. Are sediment BMPs placed to protect the downstream perimeter of the site?	X		Alpha East	MINOR
14. Are the BMPs adequately controlling sediment?	X		Beta West	NONE
15. Are the storm drain inlets protected? N/A			Beta East	MINOR

Sediment Discharges

16. Is there evidence that sediment was discharged previously from the site?	None	Minor	Major
17. Is sediment currently being discharged from the site?	None	Minor	Major

18. Where is sediment currently being discharged? Check all that apply: N/A			
	19. Other	20. Creek	21. Drain inlet
	22. Gutter	23. Drainage Outfall	24. Wetland
	25. Vernal Pool	26. Drainage swale	

Tracking Controls	Yes	No	Discharge Risk Potential		
27. Are adjacent roads and construction entrances free of sediment?	X		None	Minor	Major
28. Are current BMPs effectively preventing tracking of sediment?	X		None	Minor	Major

Wind Erosion Controls	Yes	No
29. Are wind erosion controls properly implemented?	X	
30. Are current BMPs adequately preventing wind erosion?	X	
31. Complete the Wind Erosion Violations Section. CHECK ALL THAT APPLY.		

Wind Erosion Violations			
32. Additional water needed.	NO	33. Dust tracking out	N/A
34. Stockpile protection	N/A	35. Loading/ unloading of soil/materials	N/A
36. Airborne or tracked-out lime or cement	N/A	37. Stripped pad	N/A

Comments:

Non-Stormwater Management	Yes	No
38. Are BMPs for non-stormwater discharges properly implemented?	X	
39. Are BMPs adequate for managing non-stormwater discharges?	X	
40. Is there evidence that there has been a non-stormwater discharge?		X
41. Any non-visible pollutant sampling required?		X
42. Complete the Non-Stormwater Corrections Section. CHECK ALL THAT APPLY.	N/A	

Non-Stormwater Corrections	Yes	No	Maintenance Needed			
43. Concrete/stucco washout in place?	X		Yes		No	X
44. Paint washout in place?	X		Yes		No	X
45. Vehicle maintenance in place?	X		Yes		No	X
46. Hydrant flushing protection in place?	N/A					
47. Sampling locations noted in SWPPP?	N/A					

Comments:

Waste & Disposal Management	Yes	No
48. Are there containers for construction waste and debris?	X	
49. Is construction debris in waste containers?	X	
50. Is waste adequately covered?	X	
51. Are the current waste management BMPs adequate?	X	

Waste & Disposal Corrections	Yes	No
52. Are portable toilets located 50 ft. from drain inlets?	N/A	
53. Are portable toilets placed behind sidewalks?	N/A	
54. Does advanced water treatment meet discharge standards?	N/A	

Comments:

Materials Storage	Yes	No
55. Are materials protected from weather?	X	
56. Are materials stored away from drain inlets?	X	

	Yes	No
57. Are hazardous materials placed in secondary containment?	X	

Comments:

Conclusions	Yes	No
58. Site in compliance?	X	

Comments:

Acknowledgement of Inspection

Charles Walker, CBO Site Inspector, Bureau Veritas

Alberto Salas, Activity Manager SWPPP, Abener Teyma Mojave

CONSTRUCTION SITE STORMWATER RUNOFF CONTROL INSPECTION FORM

CORRECTIONS REQUIRED PRIOR TO NEXT INSPECTION?	YES	NO	N/A

PROJECT INFORMATION		INSPECTION INFORMATION			
DID # 6 B 3 6 C 3 6 1 7 2 1		DATE: MAR 8, 2014		TIME: 9:30	
NAME: Mojave Solar Project		PRE-STORM	POST-STORM	WEEKLY	EXTENDED STORM
ADDRESS: 42134 Harper Lake Rd, Hinkley, CA 92347		RAIN >1/2"	None	Light	Moderate / Heavy
CONTRACTOR: Abener Teyma Mojave		WIND >15mph:	None	Light	Moderate / Heavy
ON-SITE CONTACT: Alberto Salas		TEMPERATURE:	LOW 56°	HIGH 86°	

INSPECTION CHECKLIST

Stormwater Pollution Prevention Plan	Yes	No	Comments
1. Is the SWPPP binder and/or DESCP on site and accessible?	X		Supplemental Form Attached? YES NO NOTE: THE "CONSTRUCTION SITE STORMWATER RUNOFF CONTROL INSPECTION FORM" IS THE ONLY FORM IN USE FOR INSPECTIONS DOCUMENTATION FOR THIS PROJECT. STORM ACTIVITY: DEFICIENCIES:
2. Does the site have a WDID No.?	X		
3. Does the SWPPP address the minimum BMP requirements?	X		
4. Are amendments to the SWPPP clearly documented and dated?	X		
5. Is the current SWPPP complete?	X		
6. Does the SWPPP include a current map accurately indicating BMPs installed at the site?	X		
7. Is routine BMP inspection and maintenance documentation on file?	X	X	

Soil Stabilization Practices	Yes	No	Comments	
8. Are BMPs implemented on inactive disturbed areas?	X		Alpha West	H.T.F. PIPE INSTALLATION
9. Are implemented BMPs effectively stabilizing soil?	X		Alpha East	POWER BLOCK CONST.
Are BMP materials stockpiled and available for use?	X		Beta West	H.T.F. PIPE INSTALLATION
11. Was any erosion observed?		X	Beta East	POWER BLOCK CONST

Sediment Control Practices	Yes	No	Discharge Risk Potential	
12. Are sediment control BMPs in place and maintained?	X		Alpha West	NONE
13. Are sediment BMPs placed to protect the downstream perimeter of the site?	X		Alpha East	MINOR
14. Are the BMPs adequately controlling sediment?	X		Beta West	NONE
15. Are the storm drain inlets protected? N/A			Beta East	MINOR

Sediment Discharges

16. Is there evidence that sediment was discharged previously from the site?	None	Minor	Major
17. Is sediment currently being discharged from the site?	None	Minor	Major

18. Where is sediment currently being discharged? Check all that apply: N/A			
	19. Other	20. Creek	21. Drain inlet
	22. Gutter	23. Drainage Outfall	24. Wetland
	25. Vernal Pool	26. Drainage swale	

Tracking Controls	Yes	No	Discharge Risk Potential		
27. Are adjacent roads and construction entrances free of sediment?	X		None	Minor	Major
28. Are current BMPs effectively preventing tracking of sediment?	X		None	Minor	Major

MOJAVE SOLAR PROJECT

CONSTRUCTION SITE STORMWATER RUNOFF CONTROL INSPECTION FORM, continued...

Wind Erosion Controls	Yes	No
29. Are wind erosion controls properly implemented?	X	
30. Are current BMPs adequately preventing wind erosion?	X	
31. Complete the Wind Erosion Violations Section. CHECK ALL THAT APPLY.		

Wind Erosion Violations			
32. Additional water needed.	NO	33. Dust tracking out	N/A
34. Stockpile protection	N/A	35. Loading/ unloading of soil/materials	N/A
36. Airborne or tracked-out lime or cement	N/A	37. Stripped pad	N/A

Comments:

Non-Stormwater Management	Yes	No
38. Are BMPs for non-stormwater discharges properly implemented?	X	
39. Are BMPs adequate for managing non-stormwater discharges?	X	
40. Is there evidence that there has been a non-stormwater discharge?		X
41. Any non-visible pollutant sampling required?		X
42. Complete the Non-Stormwater Corrections Section. CHECK ALL THAT APPLY.	N/A	

Non-Stormwater Corrections	Yes	No	Maintenance Needed			
43. Concrete/stucco washout in place?	X		Yes		No	X
44. Paint washout in place?	X		Yes		No	X
45. Vehicle maintenance in place?	X		Yes		No	X
46. Hydrant flushing protection in place?	N/A					
47. Sampling locations noted in SWPPP?	N/A					

Comments:

Waste & Disposal Management	Yes	No
48. Are there containers for construction waste and debris?	X	
49. Is construction debris in waste containers?	X	
50. Is waste adequately covered?	X	
51. Are the current waste management BMPs adequate?	X	

Waste & Disposal Corrections	Yes	N
52. Are portable toilets located 50 ft. from drain inlets?	N/A	
53. Are portable toilets placed behind sidewalks?	N/A	
54. Does advanced water treatment meet discharge standards?	N/A	

Comments:

Materials Storage	Yes	No
55. Are materials protected from weather?	X	
56. Are materials stored away from drain inlets?	X	

	Yes	No
57. Are hazardous materials placed in secondary containment?	X	

Comments:

Conclusions	Yes	No
58. Site in compliance?	X	

Comments:

Acknowledgement of Inspection

Charles Walker, CBO Site Inspector, Bureau Veritas

Alberto Salas, Activity Manager SWPPP, Abener Teyma Mojave

CONSTRUCTION SITE STORMWATER RUNOFF CONTROL INSPECTION FORM

CORRECTIONS REQUIRED PRIOR TO NEXT INSPECTION?	YES	NO	N/A

PROJECT INFORMATION		INSPECTION INFORMATION			
DID # 6 B 3 6 C 3 6 1 7 2 1		DATE: 05/15/2014		TIME: 11:00	
NAME: Mojave Solar Project		PRE-STORM	POST-STORM	WEEKLY	EXTENDED STORM
ADDRESS: 42134 Harper Lake Rd, Hinkley, CA 92347		RAIN >1/2"	None	Light	Moderate / Heavy
CONTRACTOR: Abener Teyma Mojave		WIND >15mph:	None	Light	Moderate / Heavy
ON-SITE CONTACT: Alberto Salas		TEMPERATURE:	LOW 62°	HIGH 95°	

INSPECTION CHECKLIST

Stormwater Pollution Prevention Plan	Yes	No
1. Is the SWPPP binder and/or DESCP on site and accessible?	X	
2. Does the site have a WDID No.?	X	
3. Does the SWPPP address the minimum BMP requirements?	X	
4. Are amendments to the SWPPP clearly documented and dated?	X	
5. Is the current SWPPP complete?	X	
6. Does the SWPPP include a current map accurately indicating BMPs installed at the site?	X	
7. Is routine BMP inspection and maintenance documentation on file?	X	

Comments

Supplemental Form Attached? YES NO
NOTE: THE "CONSTRUCTION SITE STORMWATER RUNOFF CONTROL INSPECTION FORM" IS THE ONLY FORM IN USE FOR INSPECTIONS DOCUMENTATION FOR THIS PROJECT.

STORM ACTIVITY:
DEFICIENCIES:

Soil Stabilization Practices	Yes	No
8. Are BMPs implemented on inactive disturbed areas?	X	
9. Are implemented BMPs effectively stabilizing soil?	X	
10. Are BMP materials stockpiled and available for use?	X	
11. Was any erosion observed?		X

Comments	
Alpha West	H.T.F. PIPE INSTALLATION
Alpha East	POWER BLOCK CONST.
Beta West	H.T.F. PIPE INSTALLATION
Beta East	POWER BLOCK CONST

Sediment Control Practices	Yes	No
12. Are sediment control BMPs in place and maintained?	X	
13. Are sediment BMPs placed to protect the downstream perimeter of the site?	X	
14. Are the BMPs adequately controlling sediment?	X	
15. Are the storm drain inlets protected? N/A		

Discharge Risk Potential	
Alpha West	NONE
Alpha East	MINOR
Beta West	NONE
Beta East	MINOR

Sediment Discharges

16. Is there evidence that sediment was discharged previously from the site?	None	Minor	Major
17. Is sediment currently being discharged from the site?	None	Minor	Major

18. Where is sediment currently being discharged? Check all that apply: N/A

19. Other	20. Creek	21. Drain inlet
22. Gutter	23. Drainage Outfall	24. Wetland
25. Vernal Pool	26. Drainage swale	

Tracking Controls	Yes	No
27. Are adjacent roads and construction entrances free of sediment?	X	
28. Are current BMPs effectively preventing tracking of sediment?	X	

Discharge Risk Potential		
None	Minor	Major
None	Minor	Major

MOJAVE SOLAR PROJECT

CONSTRUCTION SITE STORMWATER RUNOFF CONTROL INSPECTION FORM, continued…

Wind Erosion Controls	Yes	No
29. Are wind erosion controls properly implemented?	X	
30. Are current BMPs adequately preventing wind erosion?	X	
31. Complete the Wind Erosion Violations Section. CHECK ALL THAT APPLY.		

Wind Erosion Violations			
32. Additional water needed.	NO	33. Dust tracking out	N/A
34. Stockpile protection	N/A	35. Loading/ unloading of soil/materials	N/A
36. Airborne or tracked-out lime or cement	N/A	37. Stripped pad	N/A

Comments:

Non-Stormwater Management	Yes	No
38. Are BMPs for non-stormwater discharges properly implemented?	X	
39. Are BMPs adequate for managing non-stormwater discharges?	X	
40. Is there evidence that there has been a non-stormwater discharge?		X
41. Any non-visible pollutant sampling required?		X
42. Complete the Non-Stormwater Corrections Section. CHECK ALL THAT APPLY.	N/A	

Non-Stormwater Corrections	Yes	No	Maintenance Needed			
43. Concrete/stucco washout in place?	X		Yes		No	X
44. Paint washout in place?	X		Yes		No	X
45. Vehicle maintenance in place?	X		Yes		No	X
46. Hydrant flushing protection in place?	N/A					
47. Sampling locations noted in SWPPP?	N/A					

Comments:

Waste & Disposal Management	Yes	No
48. Are there containers for construction waste and debris?	X	
49. Is construction debris in waste containers?	X	
50. Is waste adequately covered?	X	
51. Are the current waste management BMPs adequate?	X	

Waste & Disposal Corrections	Yes	N
52. Are portable toilets located 50 ft. from drain inlets?	N/A	
53. Are portable toilets placed behind sidewalks?	N/A	
54. Does advanced water treatment meet discharge standards?	N/A	

Comments:

Materials Storage	Yes	No
55. Are materials protected from weather?	X	
56. Are materials stored away from drain inlets?	X	

	Yes	No
57. Are hazardous materials placed in secondary containment?	X	

Comments:

Conclusions	Yes	No
58. Site in compliance?	X	

Comments:

Acknowledgement of Inspection

Charles Walker, CBO Site Inspector, Bureau Veritas

Alberto Salas, Activity Manager SWPPP, Abener Teyma Mojave

CONSTRUCTION SITE STORMWATER RUNOFF CONTROL INSPECTION FORM

CORRECTIONS REQUIRED PRIOR TO NEXT INSPECTION?	YES	(NO)	N/A

PROJECT INFORMATION											INSPECTION INFORMATION				
DID #	6	B	3	6	C	3	6	1	7	2	1	DATE: 05/22/2014		TIME: 1:30 PM	
NAME: Mojave Solar Project												PRE-STORM	POST-STORM	(WEEKLY)	EXTENDED STORM
ADDRESS: 42134 Harper Lake Rd, Hinkley, CA 92347												RAIN >1/2"	(None)	Light	Moderate	Heavy
CONTRACTOR: Abener Teyma Mojave												WIND >15mph:	None	Light	(Moderate)	Heavy
ON-SITE CONTACT: Alberto Salas												TEMPERATURE:	LOW 57°		HIGH 78°	

INSPECTION CHECKLIST

Stormwater Pollution Prevention Plan	Yes	No
1. Is the SWPPP binder and/or DESCP on site and accessible?	X	
2. Does the site have a WDID No.?	X	
3. Does the SWPPP address the minimum BMP requirements?	X	
4. Are amendments to the SWPPP clearly documented and dated?	X	
5. Is the current SWPPP complete?	X	
6. Does the SWPPP include a current map accurately indicating BMPs installed at the site?	X	
7. Is routine BMP inspection and maintenance documentation on file?	X	

Comments

Supplemental Form Attached? YES NO
NOTE: THE "CONSTRUCTION SITE STORMWATER RUNOFF CONTROL INSPECTION FORM" IS THE ONLY FORM IN USE FOR INSPECTIONS DOCUMENTATION FOR THIS PROJECT.

STORM ACTIVITY:
DEFICIENCIES:

Soil Stabilization Practices	Yes	No
8. Are BMPs implemented on inactive disturbed areas?	X	
9. Are implemented BMPs effectively stabilizing soil?	X	
10. Are BMP materials stockpiled and available for use?	X	
11. Was any erosion observed?		X

Comments	
Alpha West	H.T.F. PIPE INSTALLATION
Alpha East	POWER BLOCK CONST.
Beta West	H.T.F. PIPE INSTALLATION
Beta East	POWER BLOCK CONST.

Sediment Control Practices	Yes	No
12. Are sediment control BMPs in place and maintained?	X	
13. Are sediment BMPs placed to protect the downstream perimeter of the site?	X	
14. Are the BMPs adequately controlling sediment?	X	
15. Are the storm drain inlets protected? N/A		

Discharge Risk Potential	
Alpha West	NONE
Alpha East	MINOR
Beta West	NONE
Beta East	MINOR

Sediment Discharges

16. Is there evidence that sediment was discharged previously from the site?	(None)	Minor	Major
17. Is sediment currently being discharged from the site?	(None)	Minor	Major

18. Where is sediment currently being discharged? Check all that apply: N/A

19. Other	20. Creek	21. Drain inlet
22. Gutter	23. Drainage Outfall	24. Wetland
25. Vernal Pool	26. Drainage swale	

Tracking Controls	Yes	No
27. Are adjacent roads and construction entrances free of sediment?	X	
28. Are current BMPs effectively preventing tracking of sediment?	X	

Discharge Risk Potential		
(None)	Minor	Major
(None)	Minor	Major

MOJAVE SOLAR PROJECT

CONSTRUCTION SITE STORMWATER RUNOFF CONTROL INSPECTION FORM, continued…

Wind Erosion Controls	Yes	No
29. Are wind erosion controls properly implemented?	X	
30. Are current BMPs adequately preventing wind erosion?	X	
31. Complete the Wind Erosion Violations Section. CHECK ALL THAT APPLY.		

Wind Erosion Violations			
32. Additional water needed.	NO	33. Dust tracking out	N/A
34. Stockpile protection	N/A	35. Loading/ unloading of soil/materials	N/A
36. Airborne or tracked-out lime or cement	N/A	37. Stripped pad	N/A

Comments:

Non-Stormwater Management	Yes	No
38. Are BMPs for non-stormwater discharges properly implemented?	X	
39. Are BMPs adequate for managing non-stormwater discharges?	X	
40. Is there evidence that there has been a non-stormwater discharge?		X
41. Any non-visible pollutant sampling required?		X
42. Complete the Non-Stormwater Corrections Section. CHECK ALL THAT APPLY.	N/A	

Non-Stormwater Corrections	Yes	No	Maintenance Needed			
43. Concrete/stucco washout in place?	X		Yes		No	X
44. Paint washout in place?	X		Yes		No	X
45. Vehicle maintenance in place?	X		Yes		No	X
46. Hydrant flushing protection in place?	N/A					
47. Sampling locations noted in SWPPP?	N/A					

Comments:

Waste & Disposal Management	Yes	No
48. Are there containers for construction waste and debris?	X	
49. Is construction debris in waste containers?	X	
50. Is waste adequately covered?	X	
51. Are the current waste management BMPs adequate?	X	

Waste & Disposal Corrections	Yes	N.
52. Are portable toilets located 50 ft. from drain inlets?	N/A	
53. Are portable toilets placed behind sidewalks?	N/A	
54. Does advanced water treatment meet discharge standards?	N/A	

Comments:

Materials Storage	Yes	No
55. Are materials protected from weather?	X	
56. Are materials stored away from drain inlets?	X	

	Yes	No
57. Are hazardous materials placed in secondary containment?	X	

Comments:

Conclusions	Yes	No
58. Site in compliance?	X	

Comments:

Acknowledgement of Inspection

Charles Walker, CBO Site Inspector, Bureau Veritas

Alberto Salas, Activity Manager SWPPP, Abener Teyma Mojave

CONSTRUCTION SITE STORMWATER RUNOFF CONTROL INSPECTION FORM

CORRECTIONS REQUIRED PRIOR TO NEXT INSPECTION?	YES	NO	N/A

PROJECT INFORMATION		INSPECTION INFORMATION			
WDID #	6 B 3 6 C 3 6 1 7 2 1	DATE:	05/29/2014	TIME:	8:30 AM
NAME: Mojave Solar Project		PRE-STORM	POST-STORM	WEEKLY	EXTENDED STORM
ADDRESS: 42134 Harper Lake Rd, Hinkley, CA 92347		RAIN >1/2"	None	Light	Moderate / Heavy
CONTRACTOR: Abener Teyma Mojave		WIND >15mph:	None	Light	Moderate / Heavy
ON-SITE CONTACT: Alberto Salas		TEMPERATURE:	LOW 63°	HIGH 94°	

INSPECTION CHECKLIST

Stormwater Pollution Prevention Plan	Yes	No	Comments
1. Is the SWPPP binder and/or DESCP on site and accessible?	X		Supplemental Form Attached? YES NO NOTE: THE "CONSTRUCTION SITE STORMWATER RUNOFF CONTROL INSPECTION FORM" IS THE ONLY FORM IN USE FOR INSPECTIONS DOCUMENTATION FOR THIS PROJECT. STORM ACTIVITY: DEFICIENCIES:
2. Does the site have a WDID No.?	X		
3. Does the SWPPP address the minimum BMP requirements?	X		
4. Are amendments to the SWPPP clearly documented and dated?	X		
5. Is the current SWPPP complete?	X		
6. Does the SWPPP include a current map accurately indicating BMPs installed at the site?	X		
7. Is routine BMP inspection and maintenance documentation on file?	X		

Soil Stabilization Practices	Yes	No	Comments	
8. Are BMPs implemented on inactive disturbed areas?	X		Alpha West	H.T.F. PIPE INSTALLATION
9. Are implemented BMPs effectively stabilizing soil?	X		Alpha East	POWER BLOCK CONST
Are BMP materials stockpiled and available for use?	X		Beta West	H.T.F. PIPE INSTALLATION
11. Was any erosion observed?		X	Beta East	POWER BLOCK CONST

Sediment Control Practices	Yes	No	Discharge Risk Potential	
12. Are sediment control BMPs in place and maintained?	X		Alpha West	NONE
13. Are sediment BMPs placed to protect the downstream perimeter of the site?	X		Alpha East	MINOR
14. Are the BMPs adequately controlling sediment?	X		Beta West	NONE
15. Are the storm drain inlets protected? N/A			Beta East	MINOR

Sediment Discharges

16. Is there evidence that sediment was discharged previously from the site?	None	Minor	Major
17. Is sediment currently being discharged from the site?	None	Minor	Major
18. Where is sediment currently being discharged? Check all that apply: N/A	19. Other	20. Creek	21. Drain inlet
	22. Gutter	23. Drainage Outfall	24. Wetland
	25. Vernal Pool	26. Drainage swale	

Tracking Controls	Yes	No	Discharge Risk Potential		
27. Are adjacent roads and construction entrances free of sediment?	X		None	Minor	Major
28. Are current BMPs effectively preventing tracking of sediment?	X		None	Minor	Major

MOJAVE SOLAR PROJECT

CONSTRUCTION SITE STORMWATER RUNOFF CONTROL INSPECTION FORM, continued...

Wind Erosion Controls	Yes	No
29. Are wind erosion controls properly implemented?	X	
30. Are current BMPs adequately preventing wind erosion?	X	
31. Complete the Wind Erosion Violations Section. CHECK ALL THAT APPLY.		

Wind Erosion Violations			
32. Additional water needed.	NO	33. Dust tracking out	N/A
34. Stockpile protection	N/A	35. Loading/ unloading of soil/materials	N/A
36. Airborne or tracked-out lime or cement	N/A	37. Stripped pad	N/A

Comments:

Non-Stormwater Management	Yes	No
38. Are BMPs for non-stormwater discharges properly implemented?	X	
39. Are BMPs adequate for managing non-stormwater discharges?	X	
40. Is there evidence that there has been a non-stormwater discharge?		X
41. Any non-visible pollutant sampling required?		X
42. Complete the Non-Stormwater Corrections Section. CHECK ALL THAT APPLY.	N/A	

Non-Stormwater Corrections	Yes	No	Maintenance Needed			
43. Concrete/stucco washout in place?	X		Yes		No	X
44. Paint washout in place?	X		Yes		No	X
45. Vehicle maintenance in place?	X		Yes		No	X
46. Hydrant flushing protection in place?	N/A					
47. Sampling locations noted in SWPPP?	N/A					

Comments:

Waste & Disposal Management	Yes	No
48. Are there containers for construction waste and debris?	X	
49. Is construction debris in waste containers?	X	
50. Is waste adequately covered?	X	
51. Are the current waste management BMPs adequate?	X	

Waste & Disposal Corrections	Yes	N.
52. Are portable toilets located 50 ft. from drain inlets?	N/A	
53. Are portable toilets placed behind sidewalks?	N/A	
54. Does advanced water treatment meet discharge standards?	N/A	

Comments:

Materials Storage	Yes	No
55. Are materials protected from weather?	X	
56. Are materials stored away from drain inlets?	X	

	Yes	No
57. Are hazardous materials placed in secondary containment?		

Comments:

Conclusions	Yes	No
58. Site in compliance?	X	

Comments:

Acknowledgement of Inspection

Charles Walker, CBO Site Inspector, Bureau Veritas

Alberto Salas, Activity Manager SWPPP, Abener Teyma Mojave

LAYNE CHRISTENSEN COMPANY



RECEIVED
MAY 2 1 2014
MOJAVE

Mojave Solar LLC
42134 Harper Lake Rd
Hinkley CA 92374

5/14/2014

Subject: Well Completion Report # e0212671

Please find attached a revised well completion report, which replaces report #e0212671 with e0213211. If you have any questions or concerns regarding this please contact me directly.

Sincerely,
Cynthia E Lee

Layne Christensen Company
1717 W. Park Ave
Redlands CA 92373

909 390-2833
cindy.lee@layne.com

*The free Adobe Reader may be used to view and complete this form. However, software must be purchased to complete, save, and reuse a saved form.

File Original with DWR

State of California

Well Completion Report

Refer to Instruction Pamphlet

No. e0213211

Page 1 of 1

Owner's Well Number Beta Well # 4

Date Work Began 02/25/2014 Date Work Ended 4/15/2014

Local Permit Agency County of San Bernardino

Permit Number 2014001056 Permit Date 1/14/14

DWR Use Only – Do Not Fill In

State Well Number/Site Number

N W

Latitude Longitude

APN/TRS/Other

Geologic Log

Orientation ○ Vertical ○ Horizontal ○ Angle Specify

Drilling Method Drilling Fluid

Depth from Surface Feet	to Feet	Description Describe material, grain size, color, etc
0	50	Sand
50	60	Clay w/some cobble, brown
60	90	Clay, brown, dense
90	110	Clay, brown dense, some silt
110	120	Clay, brown, dense, silt trace sand
120	130	Clay, brown, dense
130	140	Clay, brown, dense, silt
140	150	Poorly graded M-C Sand, w/trace silt
150	160	F-M Sand, w/some clay, brown
160	170	F Sand, w/some clay, trace gravel
170	200	F Sand, w/clay and silt, brown
200	220	C Sand, w/some gravel, little clay
220	230	M-C Sand, w/some gravel, little clay
230	280	F-C Sand, w/little gravel, trace silt and clay
280	290	Clay w/sand, little gravel
290	300	C Sand w/gravel
300	310	M-C Sand w/gravel, little clay
310	320	C Sand w/gravel
320	330	C Sand w/gravel, trace pebble and clay
330	350	C Sand w/gravel, little clay
350	380	M-C Sand w/some gravel, trace clay
380	390	F Sand w/clay and silt, trace gravel
390	400	F-C Sand w/clay and silt, trace gravel
400	410	F-M Sand w/clay and silt, trace of gravel
410	440	M-C Sand w/clay and silt, trace of gravel
440	450	M-C Sand w/ less clay, sticky
450	460	Clay w/silt, trace sand, sticky, brown
460	470	Clay w/ silt, trace sand, trace basalt, sticky, brown
470	508	Basalt, black

Total Depth of Boring 508 Feet

Total Depth of Completed Well 485 Feet

Well Owner

Name Mojave Solar LLC

Mailing Address 42134 Harper Lake Rd

City Hinkley State CA Zip 92374

Well Location

Address 42134 Harper Lake Road

City Hinkley County San Bernardino

Latitude 35 Deg. 0 Min. 37.00 Sec. (N) Longitude 117 Deg. 18 Min. 42.36 Sec. (W)

Datum Dec. Lat. Dec. Long.

APN Book 0490 Page 121 Parcel 49

Township 11N Range 4W Section 33

Location Sketch

(Sketch must be drawn by hand after form is printed.)

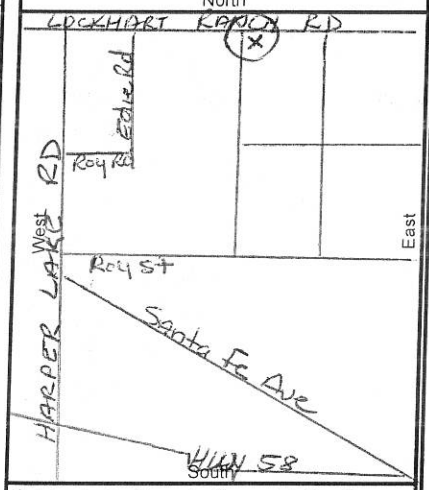

Illustrate or describe distance of well from roads, buildings, fences, rivers, etc. and attach a map. Use additional paper if necessary. **Please be accurate and complete.**

Activity

- (•) New Well
- ○ Modification/Repair
  - ○ Deepen
  - ○ Other
- ○ Destroy

Describe procedures and materials under "GEOLOGIC LOG"

Planned Uses

- (•) Water Supply
  - ☑ Domestic ☑ Public
  - ☐ Irrigation ☐ Industrial
- ○ Cathodic Protection
- ○ Dewatering
- ○ Heat Exchange
- ○ Injection
- ○ Monitoring
- ○ Remediation
- ○ Sparging
- ○ Test Well
- ○ Vapor Extraction
- ○ Other

Water Level and Yield of Completed Well

Depth to first water 132 (Feet below surface)

Depth to Static Water Level 132 (Feet) Date Measured 04/15/2014

Estimated Yield * 1,400 (GPM) Test Type Constant Rate

Test Length 72.0 (Hours) Total Drawdown 37 (Feet)

*May not be representative of a well's long term yield.

Casings

Depth from Surface Feet	to Feet	Borehole Diameter (Inches)	Type	Material	Wall Thickness (Inches)	Outside Diameter (Inches)	Screen Type	Slot Size if Any (Inches)
0	50	48	Conductor	HSLA	.375	30		
50	180	28	Blank	HSLA	.375	28		
180	380	28	Screen	HSLA	.312	18	Louver	0.070
380	400	28	Blank	HSLA	.375	18		
400	450	28	Screen	HSLA	.312	18	Louver	0.060
450	480	28	Blank	HSLA	.375	18		

Annular Material

Depth from Surface Feet	to Feet	Fill	Description
0	140	Cement Seal	10.3 SACK
0	150	Tube	Gravel Feed
140	385	Gravel Pack	1/4 x 16
385	485	Gravel Pack	6 x 16

Attachments

- ☐ Geologic Log
- ☐ Well Construction Diagram
- ☐ Geophysical Log(s)
- ☐ Soil/Water Chemical Analyses
- ☐ Other

Attach additional information, if it exists.

Certification Statement

I, the undersigned, certify that this report is complete and accurate to the best of my knowledge and belief

Name Layne Christensen Company (Person, Firm or Corporation)

1717 W. Park Ave (Address) Redlands (City) CA (State) 92373 (Zip)

Signed (C-57 Licensed Water Well Contractor) 5/14/2014 (Date Signed) 510011 (C-57 License Number)

DWR 188 REV. 1/2006

IF ADDITIONAL SPACE IS NEEDED, USE NEXT CONSECUTIVELY NUMBERED FORM

LOCATION:
Harperlake Rd - 403500

BARSTOW ROAD YARD
WATER LOAD COUNT

Date 5/29/2014

TRUCKS	DATE	LOADS	ROAD NUMBER	ACTIVEITY CODE
19608	5/12/2014	6	403500010	5445
19601	5/12/2014	6	403500010	5445
19608	5/13/2014	6	403500010	5445
19601	5/13/2014	6	403500010	5445
19608	5/14/2014	5	403500010	5445
19601	5/14/2014	5	403500010	5445
19601	5/27/2014	6	403500010	5445
19601	5/28/2014	6	403500010	5445
19601	5/29/2014	5	403500010	5445
	TOTAL OF LOADS	51		

EACH LOAD EQUELS 4,000 GALLONS

204,000 GALLONS OF WATER USED THIS WEEK