DOCKETED	
Docket Number:	22-EVI-06
Project Title:	Vehicle-Grid Integration
TN #:	273648
Document Title:	2026-11-10 -- CEC V2H Webinar -- Tesla
Description:	N/A
Filer:	Spencer Kelley
Organization:	California Energy Commission
Submitter Role:	Commission Staff
Submission Date:	11/16/2026 11:59:30 AM
Docketed Date:	11/16/2026

Tesla V2X for CEC

11/9/26

Supported Product Configurations

All new Tesla vehicles are bi-directional as of 10/1

	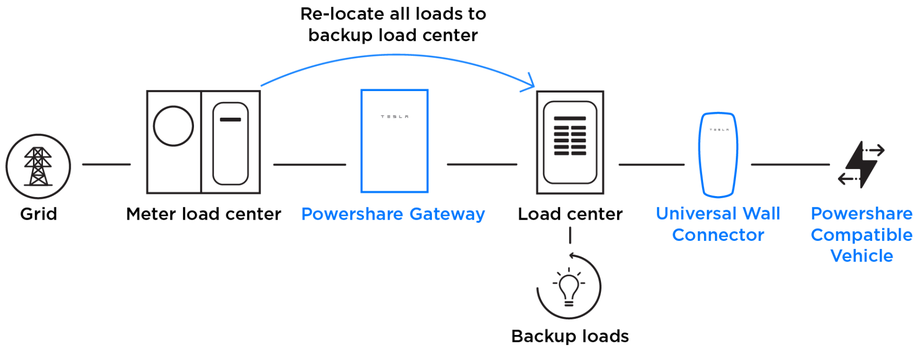	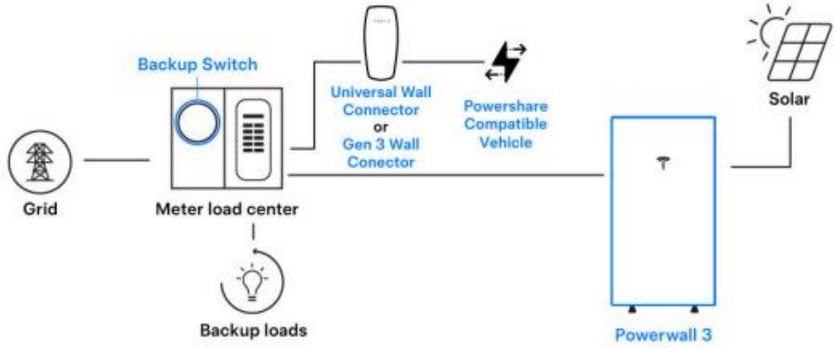
Vehicle	• Cybertruck (all)	• Model 3/Y (all after 10/1/26, 500k/yr) • Cybertruck (all)
Hardware	• Powershare Gateway • Universal Wall Connector • Solar (Optional)	• Powerwall 3 (now) • Powerwall 2/+ (end of year) • Solar (Optional) • Wall Connector 3 or Universal Wall Connector
Architecture	AC	
V2H (Non-Export)	Yes	
V2G (Export)	Yes (PG&E, SCE, SDG&E, Oncor, CNP)	No, only Powerwall participates
Certs	UL 1741 SB + MM CRD, UL 9741	

https://www.tesla.com/powershare
https://www.tesla.com/support/powershare

COPYRIGHT 2020 TESLA, INC.
PROPRIETARY AND CONFIDENTIAL, DISCLOSED UNDER NDA

Integrated User Experience

Monitor every backup session in the app, and set a Powershare limit so the car always keeps enough range to drive

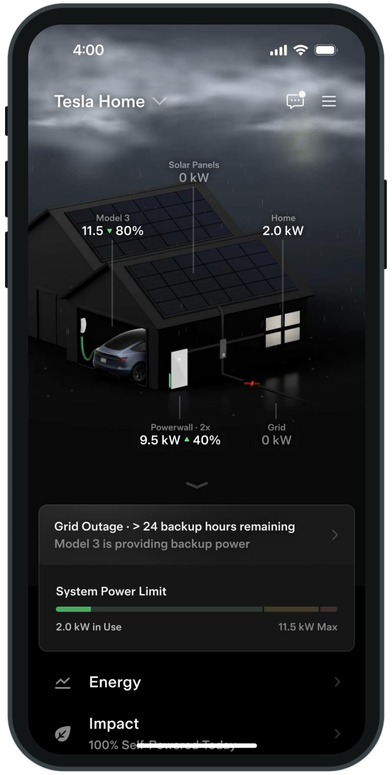

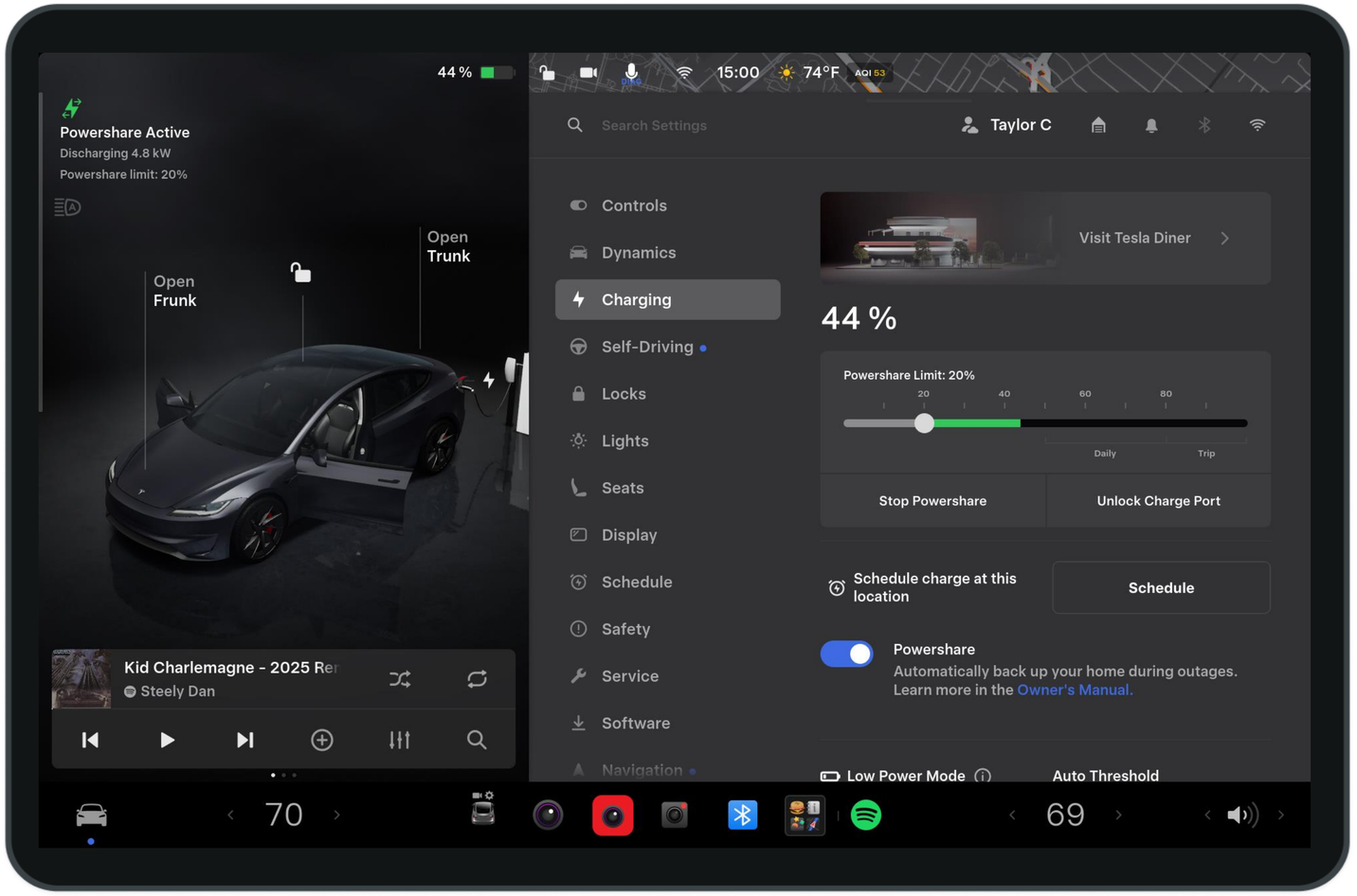

Easy, Low-Cost Install

Fewer Boxes. Less Wiring. Lower Cost.

Powershare (AC V2H) with Powerwall

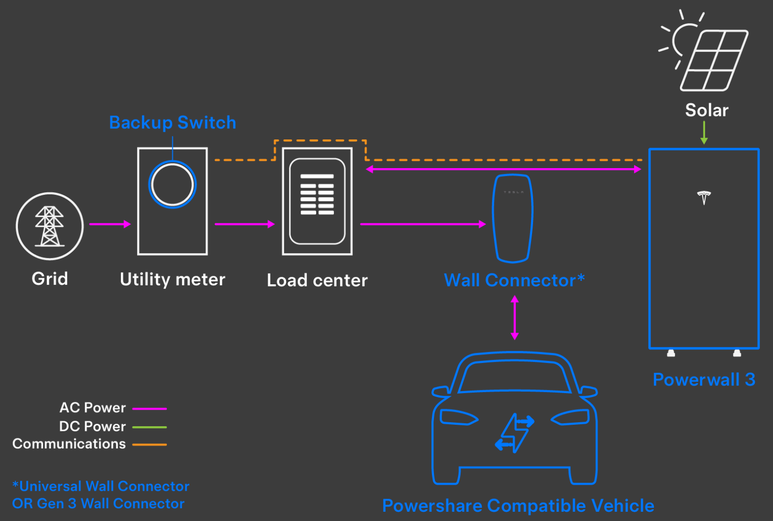

DC V2H with Stationary Battery

