DOCKETED	
Docket Number:	26-SPPE-02
Project Title:	Silver Creek Back-up Generating Facility (SFBGF)
TN #:	272835
Document Title:	Prologis SPPE Application Silver Creek Backup Generating Facility - App C Part II of II
Description:	N/A
Filer:	Scott Galati
Organization:	DayZenLLC
Submitter Role:	Applicant Representative
Submission Date:	9/18/2026 9:12:51 AM
Docketed Date:	9/18/2026

Scope of Supply

1. Filter Cartridge:
    - Wrapped for wet particles
    - Pleated for solid particles
    - Macro-structured activated carbon for oil aerosols

2. InPASS bypass (only for inPASS filter range)
    - Built-in by-pass system

3. Differential pressure gauge
    - Manual gauge (standard)
    - Smart indicator (optional upgrade – standard on inPASS)

4. Non-stick float drain
    - Automatic water removal

5. Housing
    - Aluminum die casted head and bowl

Features & Benefits

Energy Savings

• Large flow capacity

- Low resistance to the air flow
- Considerable reduction of air turbulence and pressure drop

Reliable operation

• Proven durable design

- Dedicated filter element technology based on purpose
- High-performance stainless-steel filter cores
- Internal ribs to protect the element from damage and route oil droplets
- High performance automatic drain
- Anti-corrosive coating
- Patented drainage technology

Easy set-up and use

• Operational ease

- Easy monitoring via differential gauge or optional smart indicator
- Ribbed housing for easy removal of the bowl during maintenance
- Push on element
- Anti-re-entrainment barrier is color coded to easily indicate filter grade
- Bypass for the inPASS range: internal bypass in the housing for easy maintenance

OSC 12-2500

ATLAS COPCO OIL WATER SEPARATOR

General Description

The condensate generated by oil-injected compressors contains traces of oil. Because oilposes an environmental risk, it must be treated before it can be disposed. Atlas Copco condensate management solutions allow you to separate the oil from the water, after which you can safely dispose the clean water in the sewage system. This provides you with a far more cost-efficient solution as opposed to collection and processing by an external waste company.

Atlas Copco's OSC range offers adsorption-based condensate management for oil- injected compressors between 12 and 250 l/s (25 – 5300 cfm). The oil water separator uses a proven, reliable, and robust technology to remove oil concentrations to maximum of 10 ppm.

As different types of oil react differently, we offer 2 different types of filter media, assuringto have the correct solution for every installation.

Operating Principle / Working Principle

1. Inlet: The condensate enters the unit via one single or multiple inlets. It passes through a diffuser and depressurizes in the expansion chamber. The diffuser removes bigger solid particles from the condensate so that these cannot compromise the filter media.

2. First chamber: The oil-water mixture seeps through the polypropylene filter, which adsorbs the oil, but not the water. The condensate remains in the chamber for a while, starting a secondary, natural filtration as the remaining free oil floats to the topand is adsorbed by the filter bag.

3. Second chamber: A removable cartridge, filled with activated carbon or organoclay, separates the remaining oil droplets from the condensate.

4. Outlet: Clean condensate exits from the removable cartridge with almost no residual oil content, allowing for safe discharge into the sewer system.

Scope of supply

1. Service indicator: A hollow plastic green tube rests on the polypropylene filter and will gradually go downwards together with it. Once it is almost completely downwards, theunit needs to be serviced.

2. Overflow indicator: Indicates the abnormal event of a water passage being blocked.

3. Test capsule: the turbidity of a small sample of the condensate can be compared tothe turbidity of condensate with the concentration of 10ppm.

4. Sampling point: Extra drain point, making it unnecessary to disconnect the unit from the installation when taking a sample.

5. Service drain: During service, the condensate in the units can be easily drained.

6. Flow divider (only for OSC2500): Assuring an even load over the 2 units, with a precision up to 5%.

Features & Benefits

Multiple solutions

Depending on the oil types used, we offer 2 different types of filter media:

1. Activated Carbon: Use in case of simple emulsions – Typical for mineral oils

2. Organo clay: Use in case of stronger emulsions – Typical for synthetic oils and oil mixtures.

No stagnant separated oil/water mixtures

Minimizes the potential risk for bacteria formation & accompanying health risks andinconveniences

No rotating equipment is used

Very simple and robust product

Very simple and robust mechanical maintenance and blockage indicators

Accurately and quickly identifies the need for filter replacement

Easy service

- Split filter bags of first stage filter media for safer an easier service
- Removable cartridges to quickly and safe replace the second stage filter media

Options

- Wall mounting for OSC 12 and 25
- Test capsule: standard for OSC50-2500
- Photo-electrical alarm
- Inlet manifold: in case more than 2 drain lines needs to be connected to the OSC
- Drip tray: Clean service: in case of spillage, the condensate is captured by the driptray

Effective with sales to the first user on or after August 1, 2016

CATERPILLAR LIMITED WARRANTY

Industrial, Petroleum, Locomotive, and Agriculture Engine Products and Electric Power Generation Products

Worldwide

Caterpillar Inc. or any of its subsidiaries ("Caterpillar") warrants new and remanufactured engines and new and rebuild electric power generation products sold by it (including any products of other manufacturers packaged and sold by Caterpillar), to be free from defects in material and workmanship.

This warranty does not apply engines sold for use in on-highway vehicle or marine applications; engines in machines manufactured by or for Caterpillar; C175, 3500 and 3600 series engines used in locomotive applications; 3000 Family engines, C0.5 through C4.4 and ACERT™ (C6.6, C7, C7.1, C9, C9.3, C11, C13, C15, C18, C27, and C32) engines used in industrial, mobile agriculture and locomotive applications; or Cat® batteries; or Electric Power Generation Products manufactured or assembled in India. These products are covered by other Caterpillar warranties.

This warranty is subject to the following:

Warranty Period

- For industrial engines, engines in a petroleum applications or Petroleum Power Systems (excluding petroleum fire pump application), or engines in a Locomotive application, or Uninterruptible Power Supply (UPS) systems, the warranty period is 12 months after date of delivery to the first user.
- For engines used in petroleum fire pump and mobile agriculture applications the warranty period is 24 months after date of delivery to the first user.
- For controls only (EPIC), configurable and custom switchgear products, and automatic transfer switch products, the warranty period is 24 months after date of delivery to the first user.
- For new CG132, CG170 and CG260 series power generation products the warranty period is 24 months/16,000 hours, whichever comes first, after date of delivery to first user.
- For electric power generation products other than CG132, CG170 and CG260 series in prime or continuous applications the warranty period is 12 months. For standby applications the warranty period is 24 months/1000 hours. For emergency standby applications the warranty period is 24 months/400 hours. All terms begin after date of delivery to the first user.
- For Caterpillar rebuild electric power generation products the warranty period is 12 months, but not to exceed 24 months from shipment of rebuilt electric power generation product from Caterpillar.
- For all other applications the warranty period is 12 months after date of delivery to the first user.

Caterpillar Responsibilities

If a defect in material or workmanship is found during the warranty period, Caterpillar will, during normal working hours and at a place of business of a Cat dealer or other source approved by Caterpillar:

- Provide (at Caterpillar's choice) new, Remanufactured, or Caterpillar approved repaired parts or assembled components needed to correct the defect.

Note: New, remanufactured, or Caterpillar approved repaired parts or assembled components provided under the terms of this warranty are warranted for the remainder of the warranty period applicable to the product in which installed as if such parts were original components of that product. Items replaced under this warranty become the property of Caterpillar.

- Replace lubricating oil, filters, coolant, and other service items made unusable by the defect.
- Provide reasonable and customary labor needed to correct the defect, including labor to disconnect the product from and reconnect the product to its attached equipment, mounting, and support systems, if required.

For new 3114, 3116, and 3126 engines and, new and Caterpillar rebuild electric power generation products (which includes the following: any new products of other manufacturers packaged and sold by Caterpillar)

- Provide travel labor, up to four hours round trip, if in the opinion of Caterpillar, the product cannot reasonably be transported to a place of business of a Cat dealer or other source approved by Caterpillar (travel labor in excess of four hours round trip, and any meals, mileage, lodging, etc. is the user's responsibility).

For all other products:

- Provide reasonable travel expenses for authorized mechanics, including meals, mileage, and lodging, when Caterpillar chooses to make the repair on-site.

User Responsibilities

The user is responsible for:

- Providing proof of the delivery date to the first user.
- Labor costs, except as stated under "Caterpillar Responsibilities," including costs beyond those required to disconnect the product from and reconnect the product to its attached equipment, mounting, and support systems.
- Travel or transporting costs, except as stated under "Caterpillar Responsibilities."
- Premium or overtime labor costs.
- Parts shipping charges in excess of those that are usual and customary.
- Local taxes, if applicable.
- Costs to investigate complaints, unless the problem is caused by a defect in Caterpillar material or workmanship.
- Giving timely notice of a warrantable failure and promptly making the product available for repair.
- Performance of the required maintenance (including use of proper fuel, oil, lubricants, and coolant) and items replaced due to normal wear and tear.
- Allowing Caterpillar access to all electronically stored data.

Limitations

Caterpillar is not responsible for:

- Failures resulting from any use or installation that Caterpillar judges improper.
- Failures resulting from attachments, accessory items, and parts not sold or approved by Caterpillar.
- Failures resulting from abuse, neglect, and/or improper repair.
- Failures resulting from user's delay in making the product available after being notified of a potential product problem.
- Failures resulting from unauthorized repairs or adjustments, and unauthorized fuel setting changes.
- Damage to parts, fixtures, housings, attachments, and accessory items that are not part of the engine, Cat Selective Catalytic Reduction System or electric power generation product (including any products of other manufacturers packaged and sold by Caterpillar).
- Repair of components sold by Caterpillar that is warranted directly to the user by their respective manufacturer. Depending on type of application, certain exclusions may apply. Consult your Cat dealer for more information.

(Continued on reverse side…)

This warranty covers every major component of the products. Claims under this warranty should be submitted to a place of business of a Cat dealer or other source approved by Caterpillar. For further information concerning either the location to submit claims or Caterpillar as the issuer of this warranty, write Caterpillar Inc., 100 N. E. Adams St., Peoria, IL USA 61629.

Caterpillar's obligations under this Limited Warranty are subject to, and shall not apply in contravention of, the laws, rules, regulations, directives, ordinances, orders, or statutes of the United States, or of any other applicable jurisdiction, without recourse or liability with respect to Caterpillar.

A) For products operating outside of Australia, Fiji, Nauru, New Caledonia, New Zealand, Papua New Guinea, the Solomon Islands and Tahiti, the following is applicable:

NEITHER THE FOREGOING EXPRESS WARRANTY NOR ANY OTHER WARRANTY BY CATERPILLAR, EXPRESS OR IMPLIED, IS APPLICABLE TO ANY ITEM CATERPILLAR SELLS THAT IS WARRANTED DIRECTLY TO THE USER BY ITS MANUFACTURER.

THIS WARRANTY IS EXPRESSLY IN LIEU OF ANY OTHER WARRANTIES, EXPRESS OR IMPLIED, INCLUDING ANY WARRANTY OF MERCHANTABILITY OR FITNESS FOR A PARTICULAR PURPOSE, EXCEPT CATERPILLAR EMISSION-RELATED COMPONENTS WARRANTIES FOR NEW ENGINES, WHERE APPLICABLE. REMEDIES UNDER THIS WARRANTY ARE LIMITED TO THE PROVISION OF MATERIAL AND SERVICES, AS SPECIFIED HEREIN.

CATERPILLAR IS NOT RESPONSIBLE FOR INCIDENTAL OR CONSEQUENTIAL DAMAGES.

CATERPILLAR EXCLUDES ALL LIABILITY FOR OR ARISING FROM ANY NEGLIGENCE ON ITS PART OR ON THE PART OF ANY OF ITS EMPLOYEES, AGENTS OR REPRESENTATIVES IN RESPECT OF THE MANUFACTURE OR SUPPLY OF GOODS OR THE PROVISION OF SERVICES RELATING TO THE GOODS.

IF OTHERWISE APPLICABLE, THE VIENNA CONVENTION ON CONTRACTS FOR THE INTERNATIONAL SALE OF GOODS IS EXCLUDED IN ITS ENTIRETY.

For personal or family use engines or electric power generation products, operating in the USA, its territories and possessions, some states do not allow limitations on how long an implied warranty may last nor allow the exclusion or limitation of incidental or consequential damages. Therefore, the previously expressed exclusion may not apply to you. This warranty gives you specific legal rights and you may also have other rights, which vary by jurisdiction. To find the location of the nearest Cat dealer or other authorized repair facility, call (800) 447-4986. If you have questions concerning this warranty or its applications, call or write:

In USA and Canada: Caterpillar Inc., Engine Division, P. O. Box 610, Mossville, IL 61552-0610, Attention: Customer Service Manager, Telephone (800) 447-4986. Outside the USA and Canada: Contact your Cat dealer.

B) For products operating in Australia, Fiji, Nauru, New Caledonia, New Zealand, Papua New Guinea, the Solomon Islands and Tahiti, the following is applicable:

THIS WARRANTY IS IN ADDITION TO WARRANTIES AND CONDITIONS IMPLIED BY STATUTE AND OTHER STATUTORY RIGHTS AND OBLIGATIONS THAT BY ANY APPLICABLE LAW CANNOT BE EXCLUDED, RESTRICTED OR MODIFIED ("MANDATORY RIGHTS"). ALL OTHER WARRANTIES OR CONDITIONS, EXPRESS OR IMPLIED (BY STATUTE OR OTHERWISE), ARE EXCLUDED. WITHOUT LIMITING THE FOREGOING PROVISIONS OF THIS PARAGRAPH, WHERE A PRODUCT IS SUPPLIED FOR BUSINESS PURPOSES, THE CONSUMER GUARANTEES UNDER THE CONSUMER GUARANTEES ACT 1993 (NZ) WILL NOT APPLY.

NEITHER THIS WARRANTY NOR ANY OTHER CONDITION OR WARRANTY BY CATERPILLAR, EXPRESS OR IMPLIED (SUBJECT ONLY TO THE MANDATORY RIGHTS), IS APPLICABLE TO ANY ITEM CATERPILLAR SELLS THAT IS WARRANTED DIRECTLY TO THE USER BY ITS MANUFACTURER.

IF THE MANDATORY RIGHTS MAKE CATERPILLAR LIABLE IN CONNECTION WITH SERVICES OR GOODS, THEN TO THE EXTENT PERMITTED UNDER THE MANDATORY RIGHTS, THAT LIABILITY SHALL BE LIMITED AT CATERPILLAR'S OPTION TO (a) IN THE CASE OF SERVICES, THE SUPPLY OF THE SERVICES AGAIN OR THE PAYMENT OF THE COST OF HAVING THE SERVICES SUPPLIED AGAIN AND (b) IN THE CASE OF GOODS, THE REPAIR OR REPLACEMENT OF THE GOODS, THE SUPPLY OF EQUIVALENT GOODS, THE PAYMENT OF THE COST OF SUCH REPAIR OR REPLACEMENT OR THE ACQUISITION OF EQUIVALENT GOODS.

CATERPILLAR EXCLUDES ALL LIABILITY FOR OR ARISING FROM ANY NEGLIGENCE ON ITS PART OR ON THE PART OF ANY OF ITS EMPLOYEES, AGENTS OR REPRESENTATIVES IN RESPECT OF THE MANUFACTURE OR SUPPLY OF GOODS OR THE PROVISION OF SERVICES RELATING TO THE GOODS.

CATERPILLAR IS NOT LIABLE FOR INCIDENTAL OR CONSEQUENTIAL DAMAGES UNLESS IMPOSED UNDER MANDATORY RIGHTS.

IF OTHERWISE APPLICABLE, THE VIENNA CONVENTION ON CONTRACTS FOR THE INTERNATIONAL SALE OF GOODS IS EXCLUDED IN ITS ENTIRETY.

C) For products supplied in Australia:

IF THE PRODUCTS TO WHICH THIS WARRANTY APPLIES ARE:

I. PRODUCTS OF A KIND ORDINARILY ACQUIRED FOR PERSONAL, DOMESTIC OR HOUSEHOLD USE OR CONSUMPTION; OR

II. PRODUCTS THAT COST AUD 40,000 OR LESS,

WHERE THOSE PRODUCTS WERE NOT ACQUIRED FOR THE PURPOSE OF RE-SUPPLY OR FOR THE PURPOSE OF USING THEM UP OR TRANSFORMING THEM IN THE COURSE OF PRODUCTION OR MANUFACTURE OR IN THE COURSE OF REPAIRING OTHER GOODS OR FIXTURES, THEN THIS SECTION C APPLIES.

THE FOLLOWING MANDATORY TEXT IS INCLUDED PURSUANT TO THE AUSTRALIAN CONSUMER LAW AND INCLUDES REFERENCES TO RIGHTS THE USER MAY HAVE AGAINST THE DIRECT SUPPLIER OF THE PRODUCTS: OUR GOODS COME WITH GUARANTEES THAT CANNOT BE EXCLUDED UNDER THE AUSTRALIAN CONSUMER LAW. YOU ARE ENTITLED TO A REPLACEMENT OR REFUND FOR A MAJOR FAILURE AND COMPENSATION FOR ANY OTHER REASONABLY FORESEEABLE LOSS OR DAMAGE. YOU ARE ALSO ENTITLED TO HAVE THE GOODS REPAIRED OR REPLACED IF THE GOODS FAIL TO BE OF ACCEPTABLE QUALITY AND THE FAILURE DOES NOT AMOUNT TO A MAJOR FAILURE. THE INCLUSION OF THIS TEXT DOES NOT CONSTITUTE ANY REPRESENTATION OR ACCEPTANCE BY CATERPILLAR OF LIABILITY TO THE USER OR ANY OTHER PERSON IN ADDITION TO THAT WHICH CATERPILLAR MAY HAVE UNDER THE AUSTRALIAN CONSUMER LAW.

TO THE EXTENT THE PRODUCTS FALL WITHIN THIS SECTION C BUT ARE NOT OF A KIND ORDINARILY ACQUIRED FOR PERSONAL, DOMESTIC OR HOUSEHOLD USE OR CONSUMPTION, CATERPILLAR LIMITS ITS LIABILITY TO THE EXTENT IT IS PERMITTED TO DO SO UNDER THE AUSTRALIAN CONSUMER LAW TO, AT ITS OPTION, THE REPAIR OR REPLACEMENT OF THE PRODUCTS, THE SUPPLY OF EQUIVALENT PRODUCTS, OR THE PAYMENT OF THE COST OF SUCH REPAIR OR REPLACEMENT OR THE ACQUISITION OF EQUIVALENT PRODUCTS.

THE WARRANTY SET OUT IN THIS DOCUMENT IS GIVEN BY CATERPILLAR INC. OR ANY OF ITS SUBSIDIARIES, 100 N. E. ADAMS ST, PEORIA, IL USA 61629, TELEPHONE 1 309 675 1000, THE USER IS RESPONSIBLE FOR ALL COSTS ASSOCIATED WITH MAKING A CLAIM UNDER THE WARRANTY SET OUT IN THIS DOCUMENT, EXCEPT AS EXPRESSLY STATED OTHERWISE IN THIS DOCUMENT, AND THE USER IS REFERRED TO THE BALANCE OF THE DOCUMENT TERMS CONCERNING CLAIM PROCEDURES, CATERPILLAR RESPONSIBILITIES AND USER RESPONSIBILITIES.

TO THE EXTENT PERMISSIBLE BY LAW, THE TERMS SET OUT IN THE REMAINDER OF THIS WARRANTY DOCUMENT (INCLUDING SECTION B) CONTINUE TO APPLY TO PRODUCTS TO WHICH THIS SECTION C APPLIES.

©2016 Caterpillar All Rights Reserved.
CAT, CATERPILLAR, their respective logos, "Caterpillar Yellow" the "Power Edge" trade dress as well as corporate and product identity used herein, are trademarks of Caterpillar and may not be used without permission.

CARTER POWER SYSTEMS

Section Four
DRAWINGS

Engine Generator Layout Drawing
Isolator Locations and Radiator Drawing
Wiring Diagrams

METRIC 646-6126

QTY	CONNECTION	SIZE	SHEETS
1	FUEL INLET	1 3/16-12 THD	2,5
1	EXCESS FUEL RETURN	1 3/16-12 THD	2,5,6
4	EXHAUST OUTLET	DETAIL	2,4,6,7
2	FUMES DISPOSAL HOSE	ø57.2 [ø2.25] OD	2,4,5
1	OIL DRAIN	1 3/16-12 THD	2,5
2	RADIATOR DRAIN	1/2-14 NPT	2,3,4

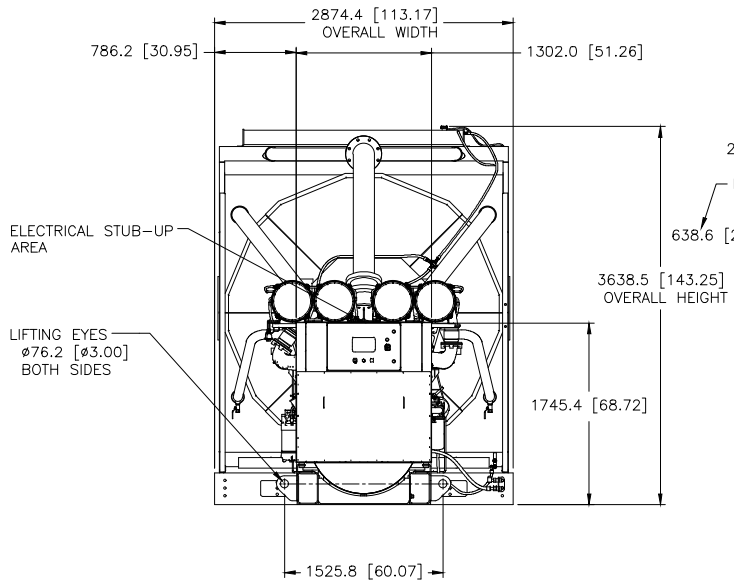

REAR VIEW

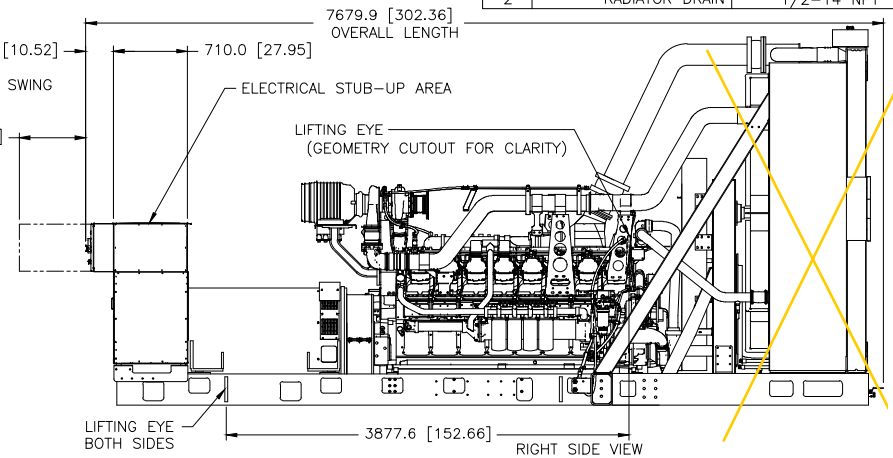

RIGHT SIDE VIEW

See IEA radiator drawings for accurate radiator information

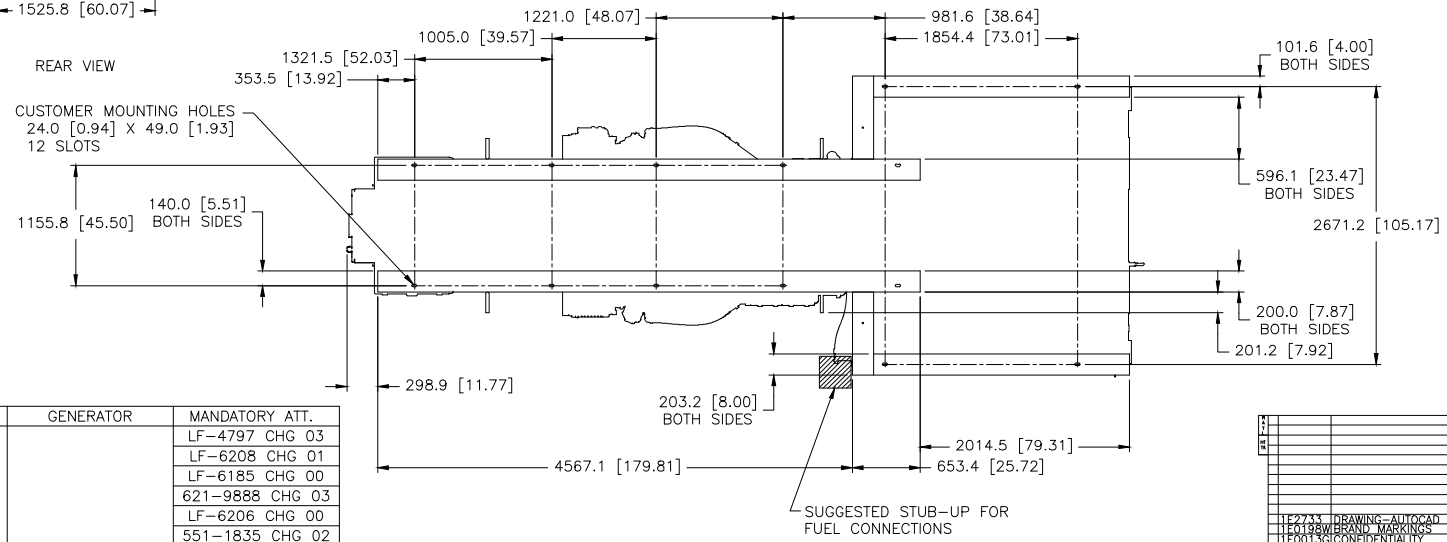

FOOTPRINT
(DIMENSIONED OUTLINE VIEW FROM ABOVE)
(RIGHT SIDE ORIENTATION)

MODEL	TYPE	PRICING AR	GENERATOR	MANDATORY ATT.
3516	H	LF-4610 CHG 05	LF-4650 CHG 00	LF-4797 CHG 03
				LF-6208 CHG 01
				LF-6185 CHG 00
				621-9888 CHG 03
				LF-6206 CHG 00
				551-1835 CHG 02
				575-0815 CHG 04
				580-2883 CHG 02
				398-0674 CHG 05
		LF-5768 CHG 00		LF-4615 CHG 01
				LF-4613 CHG 03
				LF-5067 CHG 00
				LF-4614 CHG 00
				LF-2177 CHG 02
				LF-4772 CHG 02
				LF-0784 CHG 01

PACKAGE LIFTED IN 3 PLACES WITH RADIATOR INSTALLED

PACKAGE SHOWN WITH MORE DETAIL ON FOLLOWING SHEETS

1E2733 DRAWING-AUTOCAD
1E0138W BRAND MARKINGS
1E0013C CONFIDENTIALITY
1E0012A INTERPRETATION
1E0011 INTPR & TOL

DRN M.J.SWIF
CHK M.J.SWIF
APPD B.D. MARTIN
RECORDS X
UNLESS OTHERWISE SPECIFIED
DIMENSIONS ARE IN MM [INCH]
DIMENSIONS W/O TOL ARE BASIC
SCALE 1 = 16
SHEET 1 OF 9
00 20AUG23

CATERPILLAR INC.

INSTALLATION-ENGINE
3516E 60HZ LV 3000KVA
646-6126 A1BD

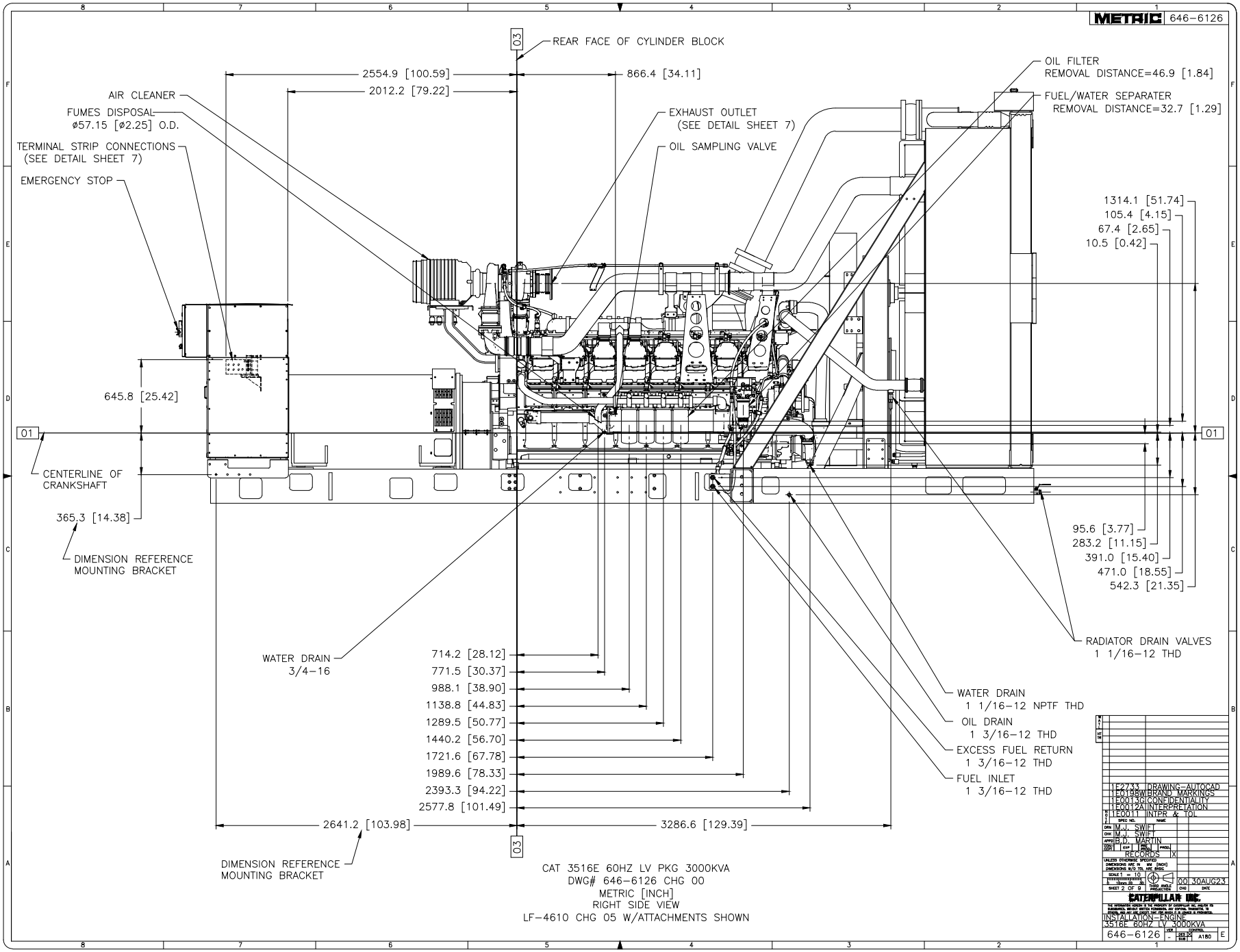
METRIC 646-6126
REAR FACE OF CYLINDER BLOCK
2554.9 [100.59]
2012.2 [79.22]
866.4 [34.11]
AIR CLEANER
FUMES DISPOSAL
ø57.15 [ø2.25] O.D.
TERMINAL STRIP CONNECTIONS
(SEE DETAIL SHEET 7)
EMERGENCY STOP
EXHAUST OUTLET
(SEE DETAIL SHEET 7)
OIL SAMPLING VALVE
OIL FILTER
REMOVAL DISTANCE=46.9 [1.84]
FUEL/WATER SEPARATER
REMOVAL DISTANCE=32.7 [1.29]
1314.1 [51.74]
105.4 [4.15]
67.4 [2.65]
10.5 [0.42]
645.8 [25.42]
CENTERLINE OF
CRANKSHAFT
365.3 [14.38]
DIMENSION REFERENCE
MOUNTING BRACKET
95.6 [3.77]
283.2 [11.15]
391.0 [15.40]
471.0 [18.55]
542.3 [21.35]
RADIATOR DRAIN VALVES
1 1/16-12 THD
WATER DRAIN
3/4-16
714.2 [28.12]
771.5 [30.37]
988.1 [38.90]
1138.8 [44.83]
1289.5 [50.77]
1440.2 [56.70]
1721.6 [67.78]
1989.6 [78.33]
2393.3 [94.22]
2577.8 [101.49]
WATER DRAIN
1 1/16-12 NPTF THD
OIL DRAIN
1 3/16-12 THD
EXCESS FUEL RETURN
1 3/16-12 THD
FUEL INLET
1 3/16-12 THD
2641.2 [103.98]
3286.6 [129.39]
DIMENSION REFERENCE
MOUNTING BRACKET
CAT 3516E 60HZ LV PKG 3000KVA
DWG# 646-6126 CHG 00
METRIC [INCH]
RIGHT SIDE VIEW
LF-4610 CHG 05 W/ATTACHMENTS SHOWN
1E2733 DRAWING-AUTOCAD
1E0138W BRAND MARKINGS
1E0013C CONFIDENTIALITY
1E0122A INTERPRETATION
1E0011 INTPR & TOL
M.J. SWIFT
M.J. SWIFT
B.D. MARTIN
RECORDS X
SCALE 1 = 10
SHEET 2 OF 9
00 30AUG23
CATERPILLAR INC.
INSTALLATION-ENGINE
3516E 60HZ LV 3000KVA
646-6126
A180
E

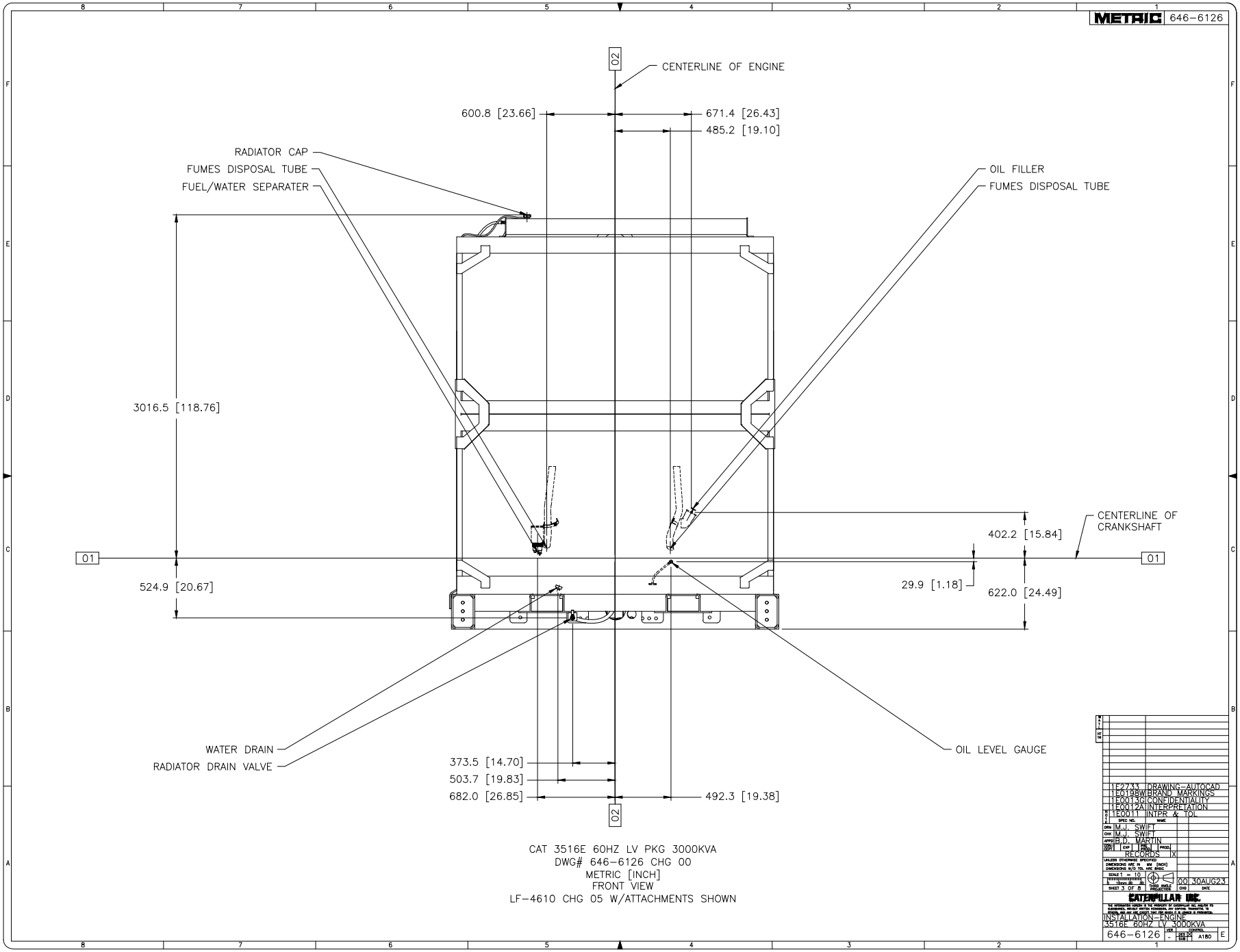
METRIC 646-6126
CENTERLINE OF ENGINE
600.8 [23.66]
671.4 [26.43]
485.2 [19.10]
RADIATOR CAP
FUMES DISPOSAL TUBE
FUEL/WATER SEPARATER
OIL FILLER
FUMES DISPOSAL TUBE
3016.5 [118.76]
CENTERLINE OF CRANKSHAFT
402.2 [15.84]
524.9 [20.67]
29.9 [1.18]
622.0 [24.49]
WATER DRAIN
RADIATOR DRAIN VALVE
OIL LEVEL GAUGE
373.5 [14.70]
503.7 [19.83]
682.0 [26.85]
492.3 [19.38]
CAT 3516E 60HZ LV PKG 3000KVA
DWG# 646-6126 CHG 00
METRIC [INCH]
FRONT VIEW
LF-4610 CHG 05 W/ATTACHMENTS SHOWN
1E2733 DRAWING-AUTOCAD
1E0138W BRAND MARKINGS
1E0013C CONFIDENTIALITY
1E0122A INTERPRETATION
1E0011 INTPR & TOL
M.J. SWIFT
M.J. SWIFT
B.D. MARTIN
RECORDS X
SCALE 1 = 10
SHEET 3 OF 8
00 30AUG23
CATERPILLAR INC.
INSTALLATION-ENGINE
3516E 60HZ LV 3000KVA
646-6126
A180
E

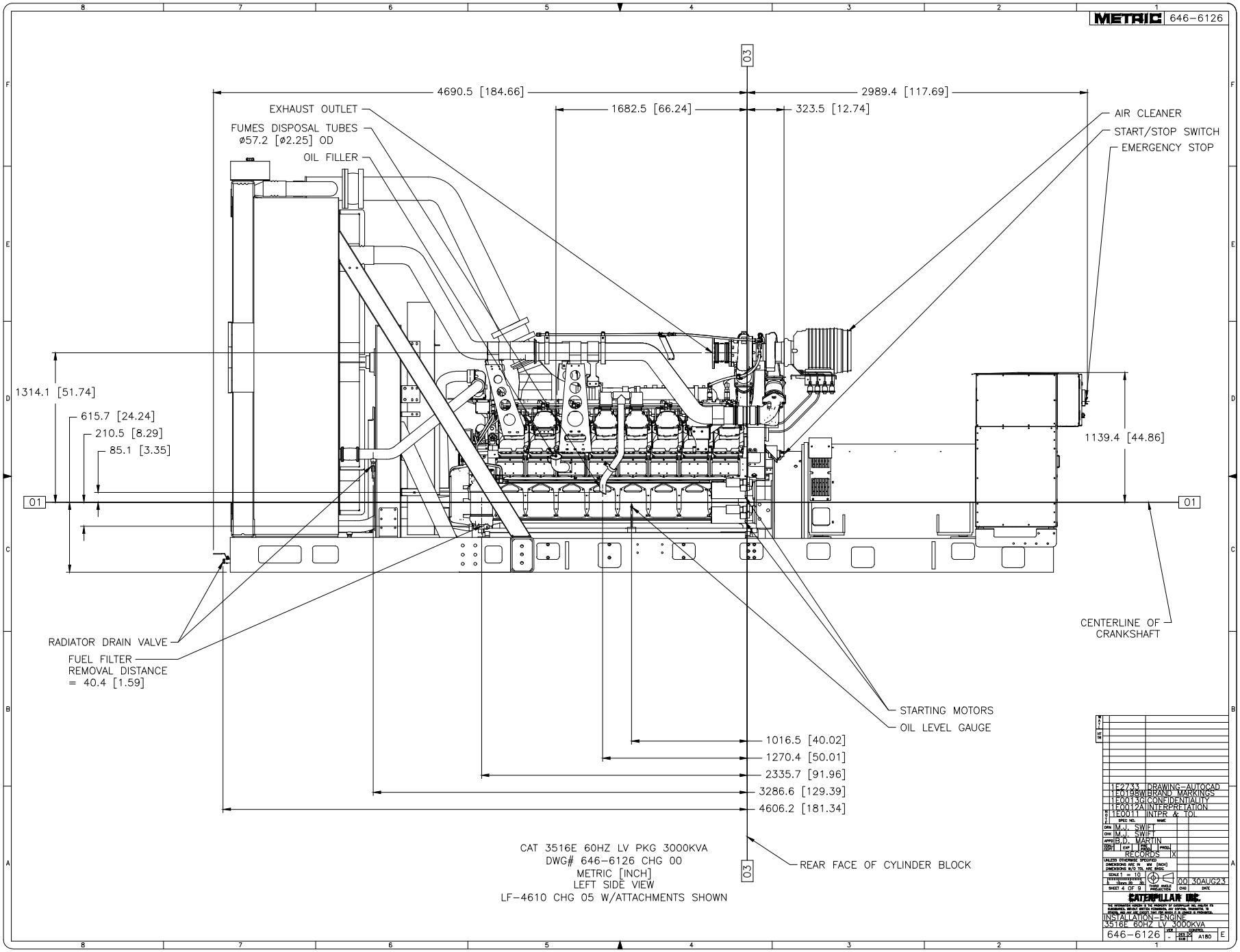
METRIC 646-6126
4690.5 [184.66]
2989.4 [117.69]
1682.5 [66.24]
323.5 [12.74]
EXHAUST OUTLET
FUMES DISPOSAL TUBES
ø57.2 [ø2.25] OD
OIL FILLER
AIR CLEANER
START/STOP SWITCH
EMERGENCY STOP
1314.1 [51.74]
615.7 [24.24]
210.5 [8.29]
85.1 [3.35]
1139.4 [44.86]
01
03
RADIATOR DRAIN VALVE
FUEL FILTER
REMOVAL DISTANCE
= 40.4 [1.59]
CENTERLINE OF
CRANKSHAFT
STARTING MOTORS
OIL LEVEL GAUGE
1016.5 [40.02]
1270.4 [50.01]
2335.7 [91.96]
3286.6 [129.39]
4606.2 [181.34]
REAR FACE OF CYLINDER BLOCK
CAT 3516E 60HZ LV PKG 3000KVA
DWG# 646-6126 CHG 00
METRIC [INCH]
LEFT SIDE VIEW
LF-4610 CHG 05 W/ATTACHMENTS SHOWN
1E2733 DRAWING-AUTOCAD
1E0138W BRAND MARKINGS
1E0013C CONFIDENTIALITY
1E0122A INTERPRETATION
1E0011 INTPR & TOL
M.J. SWIFT
M.J. SWIFT
B.D. MARTIN
RECORDS X
SCALE 1 = 10
SHEET 4 OF 9
00 30AUG23
CATERPILLAR INC.
INSTALLATION-ENGINE
3516E 60HZ LV 3000KVA
646-6126
A180
E

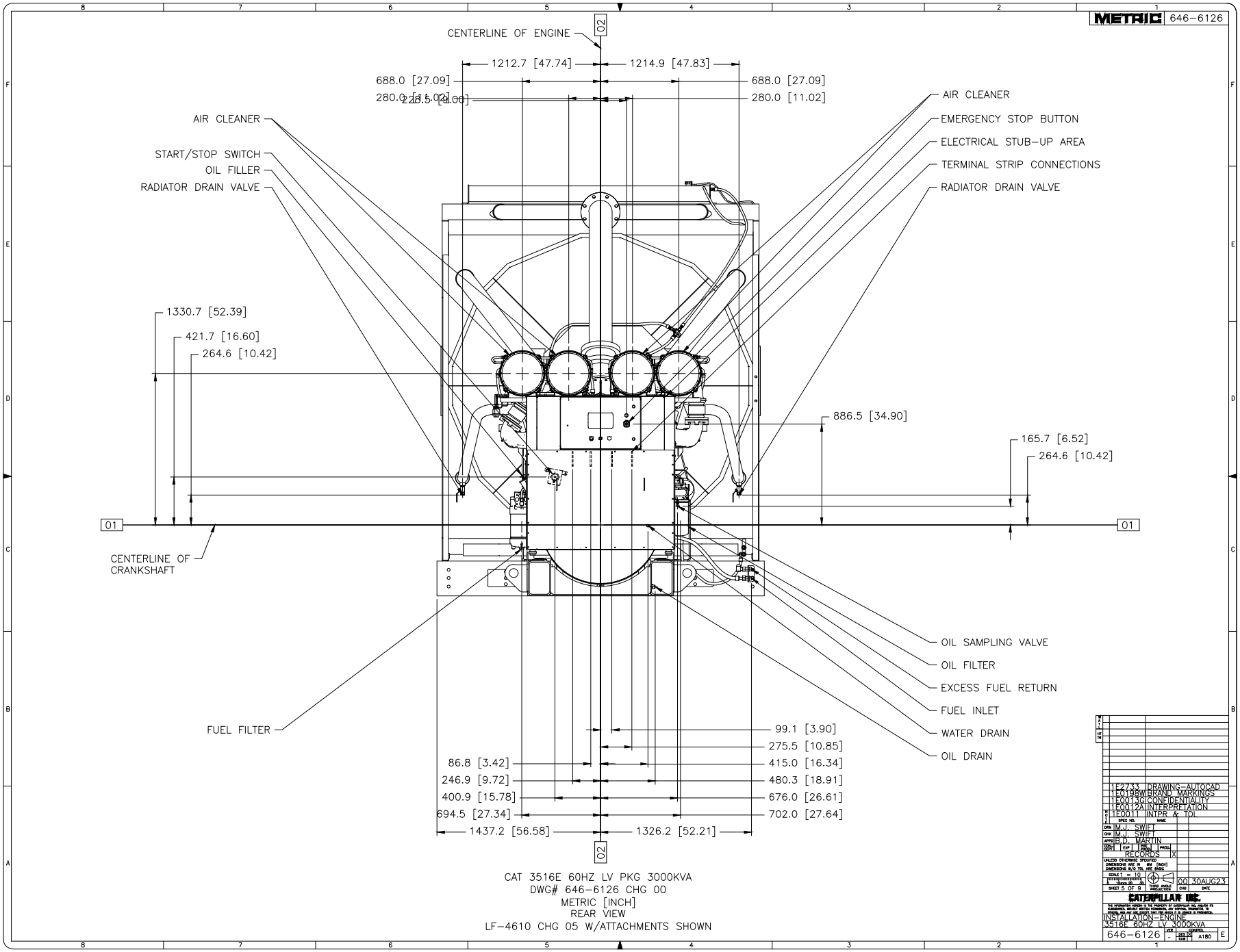
METRIC 646-6126
CENTERLINE OF ENGINE
02
1212.7 [47.74]
1214.9 [47.83]
688.0 [27.09]
688.0 [27.09]
280.0 [11.02]
280.0 [11.02]
AIR CLEANER
START/STOP SWITCH
OIL FILLER
RADIATOR DRAIN VALVE
AIR CLEANER
EMERGENCY STOP BUTTON
ELECTRICAL STUB-UP AREA
TERMINAL STRIP CONNECTIONS
RADIATOR DRAIN VALVE
1330.7 [52.39]
421.7 [16.60]
264.6 [10.42]
886.5 [34.90]
165.7 [6.52]
264.6 [10.42]
01
01
CENTERLINE OF CRANKSHAFT
OIL SAMPLING VALVE
OIL FILTER
EXCESS FUEL RETURN
FUEL INLET
WATER DRAIN
OIL DRAIN
FUEL FILTER
99.1 [3.90]
275.5 [10.85]
86.8 [3.42]
415.0 [16.34]
246.9 [9.72]
480.3 [18.91]
400.9 [15.78]
676.0 [26.61]
694.5 [27.34]
702.0 [27.64]
1437.2 [56.58]
1326.2 [52.21]
02
CAT 3516E 60HZ LV PKG 3000KVA
DWG# 646-6126 CHG 00
METRIC [INCH]
REAR VIEW
LF-4610 CHG 05 W/ATTACHMENTS SHOWN
1E2733 DRAWING-AUTOCAD
1E0138W BRAND MARKINGS
1E0013C CONFIDENTIALITY
1E0122A INTERPRETATION
1E0011 INTPR & TOL
SPEC NO. NAME
DRN M.J. SWIFT
CHK M.J. SWIFT
APPD B.D. MARTIN
RECORDS X
UNLESS OTHERWISE SPECIFIED
DIMENSIONS ARE IN MM [INCH]
DIMENSIONS W/O TOL ARE BASIC
SCALE 1 = 10
SHEET 5 OF 9
THIRD ANGLE PROJECTION
00 30AUG23
CHG DATE
CATERPILLAR INC.
INSTALLATION-ENGINE
3516E 60HZ LV 3000KVA
646-6126
A180
E

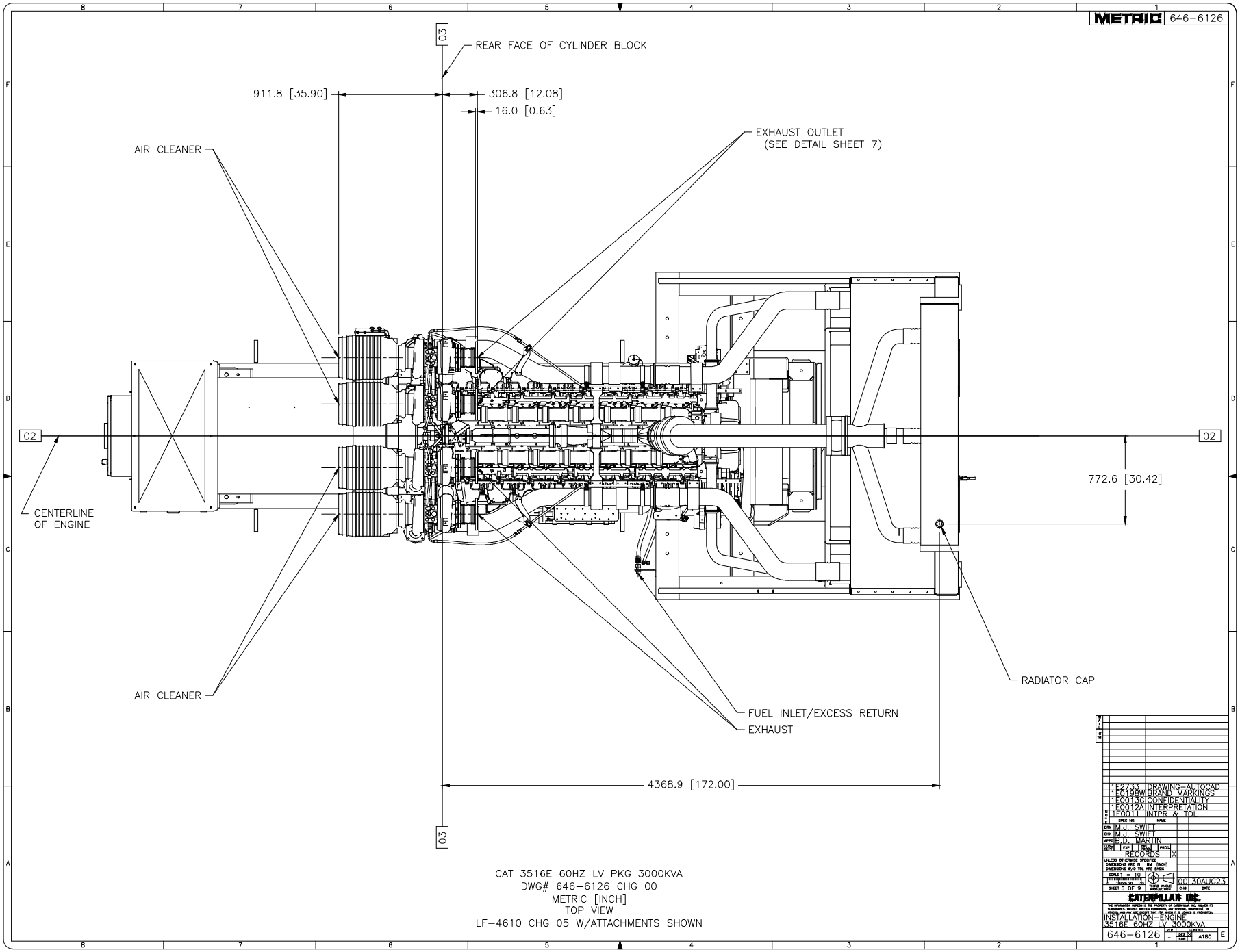

CAT 3516E 60HZ LV PKG 3000KVA
DWG# 646-6126 CHG 00
METRIC [INCH]
TOP VIEW
LF-4610 CHG 05 W/ATTACHMENTS SHOWN

METRIC 646-6126

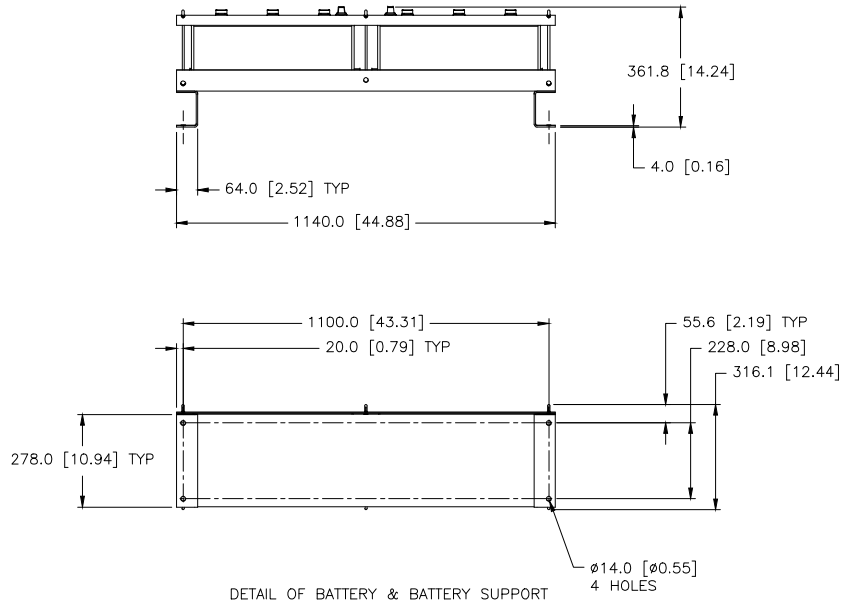

DETAIL OF BATTERY & BATTERY SUPPORT
367-5172 CHG 01 AND LF-5476 CHG 01
(SHIPPED LOOSE)
SCALE 1=5

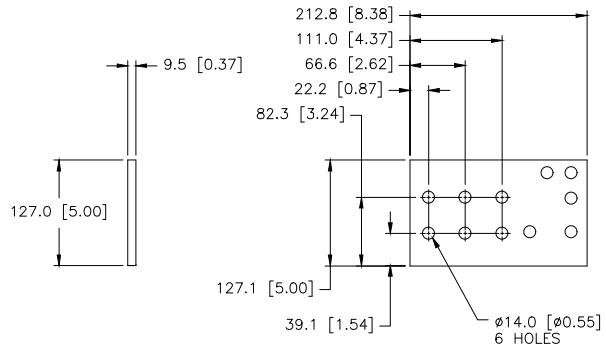

DETAIL OF TERMINAL STRIP CONNECTION
(T0, T1, T2, T3)
SCALE 1=2

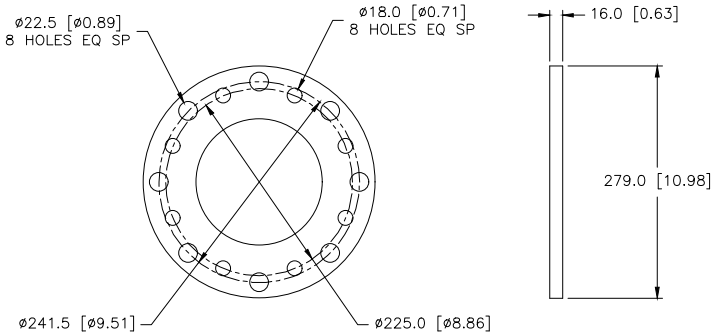

DETAIL OF
EXHAUST OUTLET
SCALE 1=2

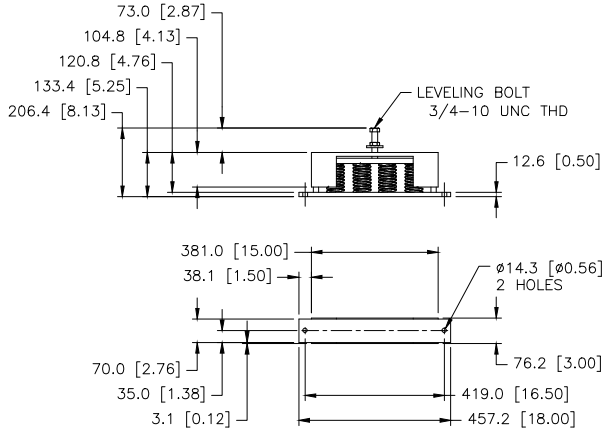

DETAIL OF VIBRATION ISOLATORS
398-0674 CHG 05
(SHIPPED LOOSE)
SCALE 1=5

REV	SPEC NO.	NAME
	1E2733	DRAWING-AUTOCAD
	1E0138W	BRAND MARKINGS
	1E0013C	CONFIDENTIALITY
	1E0122A	INTERPRETATION
	1E0011	INTPR & TOL

DRN M.J. SWIFT
CHK M.J. SWIFT
APPD B.D. MARTIN
CHG DIST | EXP | RES | PROD
RECORDS X

UNLESS OTHERWISE SPECIFIED
DIMENSIONS ARE IN MM [INCH]
DIMENSIONS W/O TOL ARE BASIC

SCALE 1 = 10
WEIGHT(KG) N/A
SHEET 7 OF 9
THIRD ANGLE PROJECTION
CHG 00 DATE 30AUG23

CATERPILLAR INC.

THE INFORMATION HEREIN IS THE PROPERTY OF CATERPILLAR INC. AND ITS SUBSIDIARIES, MAY NOT BE DUPLICATED, OR COPIED, TRANSFERRED TO ANYONE OUTSIDE THE COMPANY, OR USED FOR ANYTHING OTHER THAN THE PURPOSE FOR WHICH IT WAS GIVEN, WITHOUT THE PRIOR WRITTEN CONSENT OF CATERPILLAR INC.

INSTALLATION-ENGINE
3516E 60HZ LV 3000KVA

646-6126 LVR - CONTROL SEQ 24 SUB A180 E

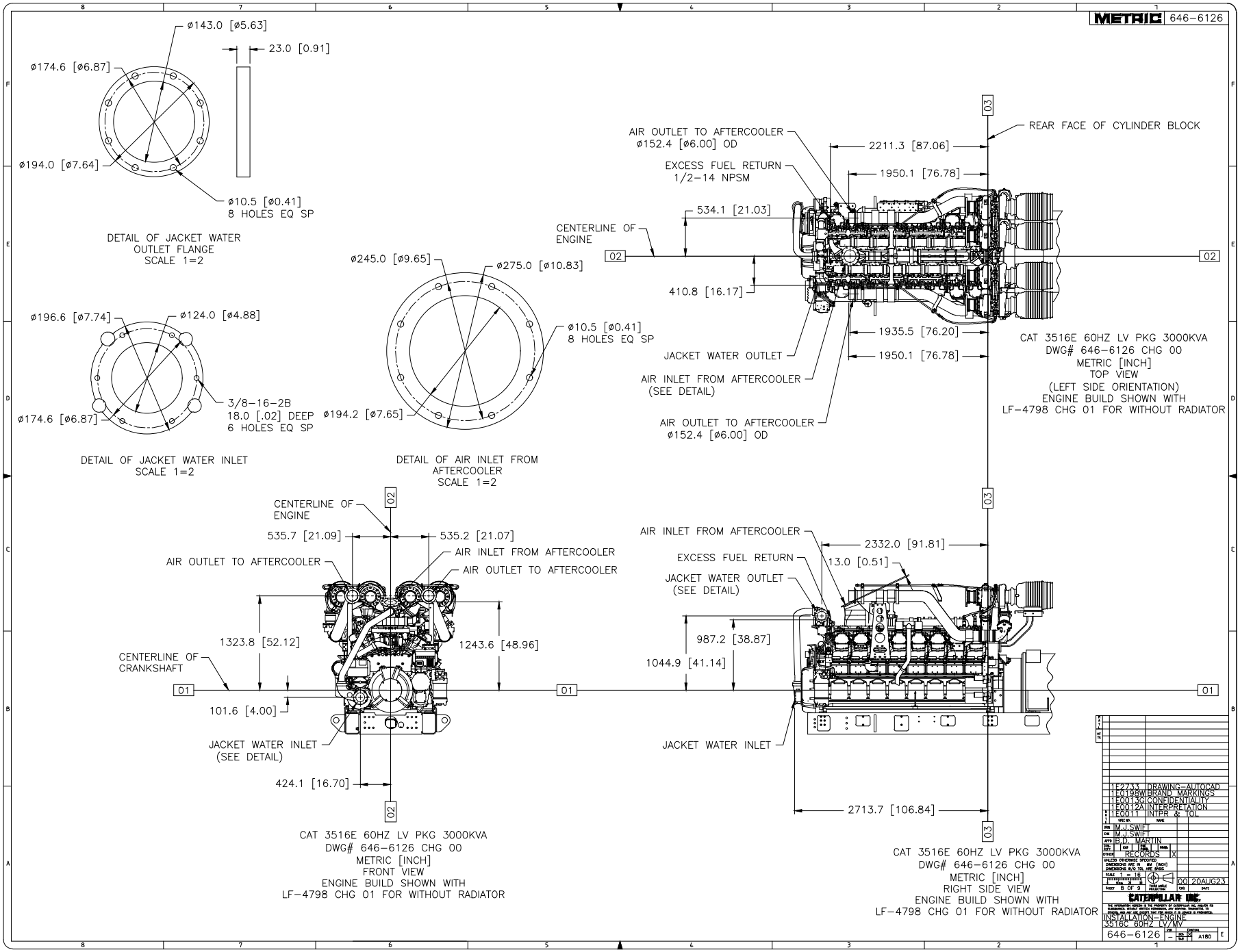
METRIC 646-6126
ø143.0 [ø5.63]
23.0 [0.91]
ø174.6 [ø6.87]
ø194.0 [ø7.64]
ø10.5 [ø0.41]
8 HOLES EQ SP
DETAIL OF JACKET WATER
OUTLET FLANGE
SCALE 1=2
ø196.6 [ø7.74]
ø124.0 [ø4.88]
3/8-16-2B
18.0 [.02] DEEP
6 HOLES EQ SP
ø174.6 [ø6.87]
DETAIL OF JACKET WATER INLET
SCALE 1=2
ø245.0 [ø9.65]
ø275.0 [ø10.83]
ø10.5 [ø0.41]
8 HOLES EQ SP
ø194.2 [ø7.65]
DETAIL OF AIR INLET FROM
AFTERCOOLER
SCALE 1=2
AIR OUTLET TO AFTERCOOLER
ø152.4 [ø6.00] OD
EXCESS FUEL RETURN
1/2-14 NPSM
REAR FACE OF CYLINDER BLOCK
2211.3 [87.06]
1950.1 [76.78]
534.1 [21.03]
CENTERLINE OF
ENGINE
02
03
410.8 [16.17]
1935.5 [76.20]
1950.1 [76.78]
JACKET WATER OUTLET
AIR INLET FROM AFTERCOOLER
(SEE DETAIL)
AIR OUTLET TO AFTERCOOLER
ø152.4 [ø6.00] OD
CAT 3516E 60HZ LV PKG 3000KVA
DWG# 646-6126 CHG 00
METRIC [INCH]
TOP VIEW
(LEFT SIDE ORIENTATION)
ENGINE BUILD SHOWN WITH
LF-4798 CHG 01 FOR WITHOUT RADIATOR
CENTERLINE OF
ENGINE
535.7 [21.09]
535.2 [21.07]
AIR INLET FROM AFTERCOOLER
AIR OUTLET TO AFTERCOOLER
AIR OUTLET TO AFTERCOOLER
1323.8 [52.12]
1243.6 [48.96]
CENTERLINE OF
CRANKSHAFT
01
101.6 [4.00]
JACKET WATER INLET
(SEE DETAIL)
424.1 [16.70]
CAT 3516E 60HZ LV PKG 3000KVA
DWG# 646-6126 CHG 00
METRIC [INCH]
FRONT VIEW
ENGINE BUILD SHOWN WITH
LF-4798 CHG 01 FOR WITHOUT RADIATOR
AIR INLET FROM AFTERCOOLER
2332.0 [91.81]
EXCESS FUEL RETURN
13.0 [0.51]
JACKET WATER OUTLET
(SEE DETAIL)
987.2 [38.87]
1044.9 [41.14]
JACKET WATER INLET
2713.7 [106.84]
CAT 3516E 60HZ LV PKG 3000KVA
DWG# 646-6126 CHG 00
METRIC [INCH]
RIGHT SIDE VIEW
ENGINE BUILD SHOWN WITH
LF-4798 CHG 01 FOR WITHOUT RADIATOR
1E2733 DRAWING-AUTOCAD
1E0138W BRAND MARKINGS
1E0013C CONFIDENTIALITY
1E0012A INTERPRETATION
1E0011 INTPR & TOL
M.J.SWIFT
M.J.SWIFT
B.D. MARTIN
RECORDS
SCALE 1 = 16
SHEET 8 OF 9
00 20AUG23
CATERPILLAR INC.
INSTALLATION-ENGINE
3516C 60HZ LV/MV
646-6126
A180

METRIC 646-6126

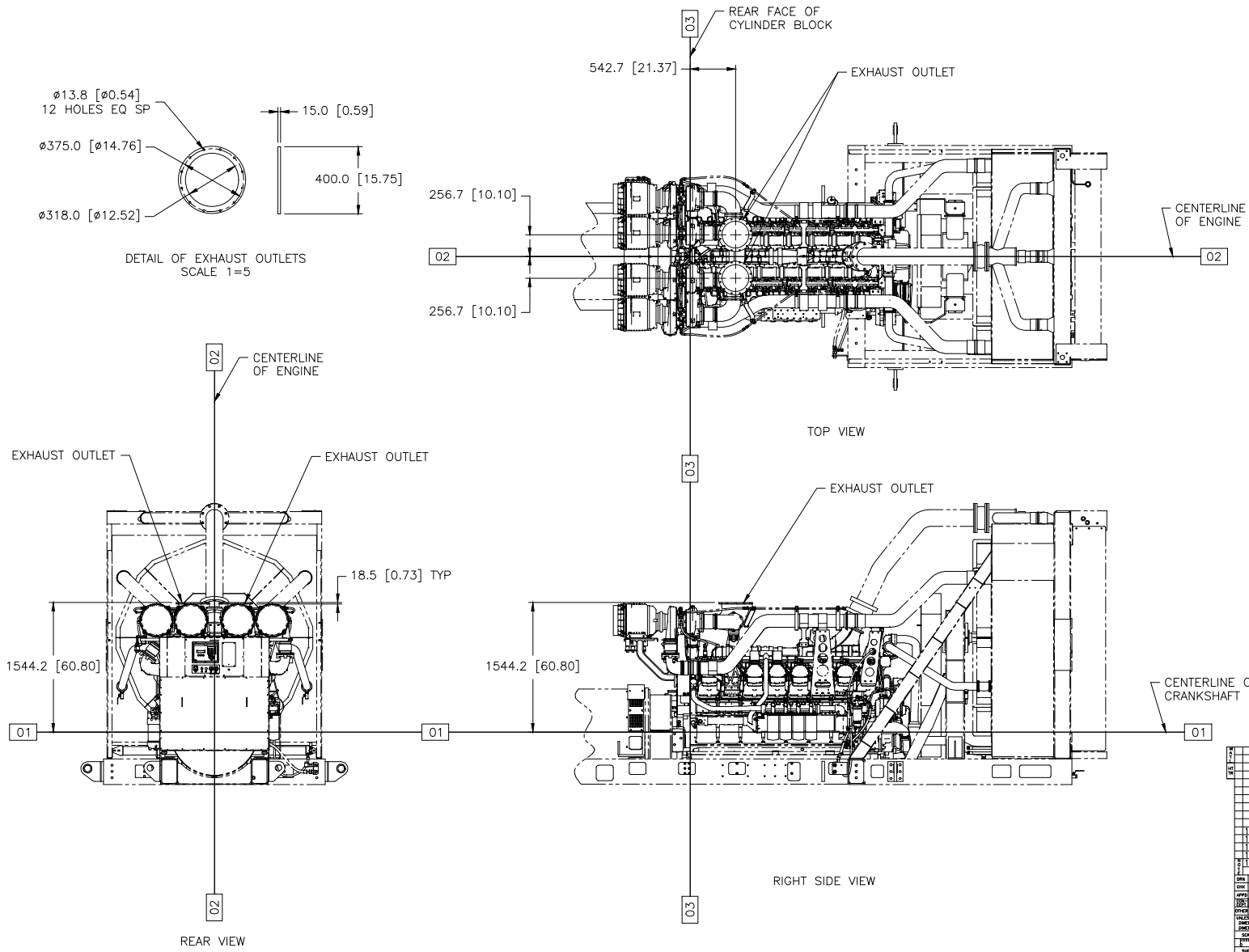

MODEL	TYPE	PRICING AR
3516	–	LF-4903 CHG 03

1	1E2733	DRAWING-AUTOCAD
1	1E0198W	BRAND MARKINGS
1	1E0013C	CONFIDENTIALITY
1	1E0012A	INTERPRETATION
1	1E0011	INTPR & TOL
NO.	SPEC NO.	NAME

DRN M.J. SWIFT
CHK M.J. SWIFT
APPD B.D. MARTIN
ENG SUPV EXP | PROD | PROD
OTHER RECORDS X

UNLESS OTHERWISE SPECIFIED:
DIMENSIONS ARE IN MM [INCH]
DIMENSIONS W/O TOL ARE BASIC

SCALE 1 = 16
SHEET 8 OF 9
THIRD ANGLE PROJECTION
CHG 00 DATE 20AUG23

CATERPILLAR INC.

THE INFORMATION HEREON IS THE PROPERTY OF CATERPILLAR INC. AND ITS SUBSIDIARIES AND MAY BEARS PATENTED, COPYRIGHTED, AND OTHER PROPRIETARY RIGHTS. REPRODUCTION OR USE WITHOUT PERMISSION IS PROHIBITED.

INSTALLATION-ENGINE
3516E 60HZ LV 3000KVA

646-6126 LVR - CONTROL DES 24 SUB A180 E

METRIC 646-6126

QTY	CONNECTION	SIZE	SHEETS
1	FUEL INLET	1 3/16-12 THD	2,5
1	EXCESS FUEL RETURN	1 3/16-12 THD	2,5,6
4	EXHAUST OUTLET	DETAIL	2,4,6,7
2	FUMES DISPOSAL HOSE	ø57.2 [ø2.25] OD	2,4,5
1	OIL DRAIN	1 3/16-12 THD	2,5
2	RADIATOR DRAIN	1/2-14 NPT	2,3,4

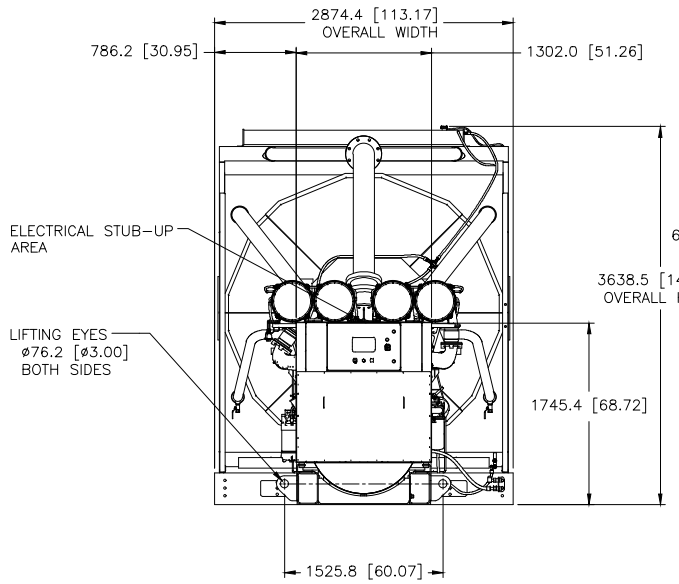

REAR VIEW

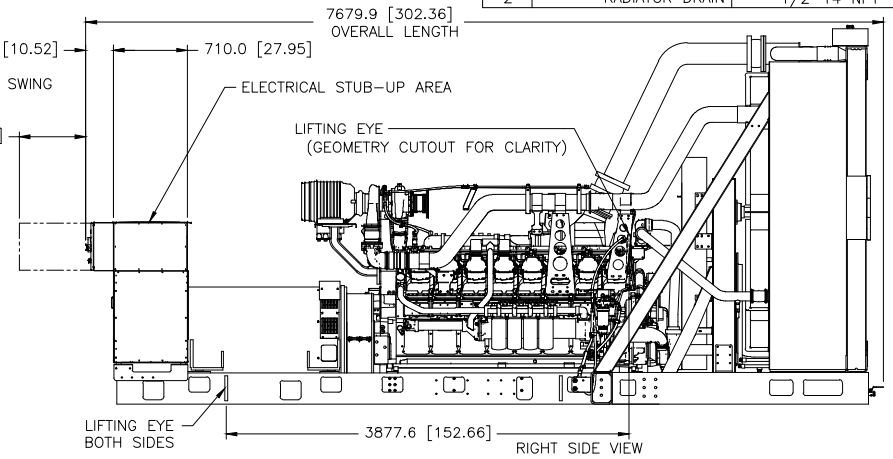

RIGHT SIDE VIEW

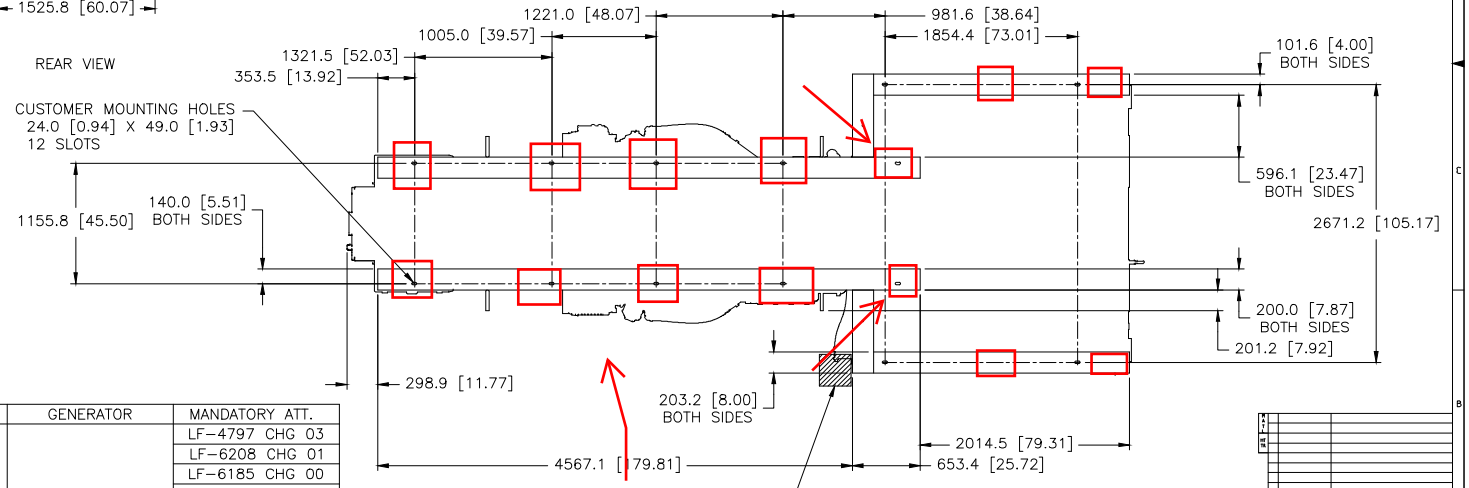

FOOTPRINT
(DIMENSIONED OUTLINE VIEW FROM ABOVE)
(RIGHT SIDE ORIENTATION)

MODEL	TYPE	PRICING AR	GENERATOR	MANDATORY ATT.
3516	H	LF-4610 CHG 05	LF-4650 CHG 00	LF-4797 CHG 03
				LF-6208 CHG 01
				LF-6185 CHG 00
				621-9888 CHG 03
				LF-6206 CHG 00
				551-1835 CHG 02
				575-0815 CHG 04
				580-2883 CHG 02
				398-0674 CHG 05
		LF-5768 CHG 00		LF-4615 CHG 01
				LF-4613 CHG 03
				LF-5067 CHG 00
				LF-4614 CHG 00
				LF-2177 CHG 02
				LF-4772 CHG 02
				LF-0784 CHG 01

PACKAGE LIFTED IN 3 PLACES WITH RADIATOR INSTALLED

PACKAGE SHOWN WITH MORE DETAIL ON FOLLOWING SHEETS

1	E2733 DRAWING-AUTOCAD
1	E0138W BRAND MARKINGS
1	E0013C CONFIDENTIALITY
1	E0012A INTERPRETATION
1	E0011 INTPR & TOL

DRN M.J.SWIF
CHK M.J.SWIF
APPD B.D. MARTIN
DIM. UNIT: MM
OTHER RECORDS X
UNLESS OTHERWISE SPECIFIED
DIMENSIONS ARE IN MM [INCH]
DIMENSIONS W/O TOL ARE BASIC
SCALE 1 = 16
THIRD ANGLE PROJECTION
SHEET 1 OF 9
00 20AUG23
CATERPILLAR INC.
THE INFORMATION HEREON IS THE PROPERTY OF CATERPILLAR INC. AND ITS SUBSIDIARIES AND MAY NOT BE REPRODUCED OR DISPLAYED, DISCLOSED OR USED WITHOUT WRITTEN PERMISSION.
INSTALLATION-ENGINE
3516E 60HZ LV 3000KVA
646-6126
A1BD

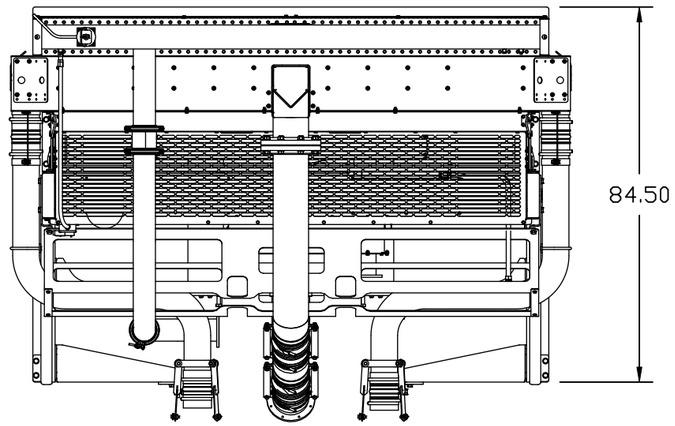

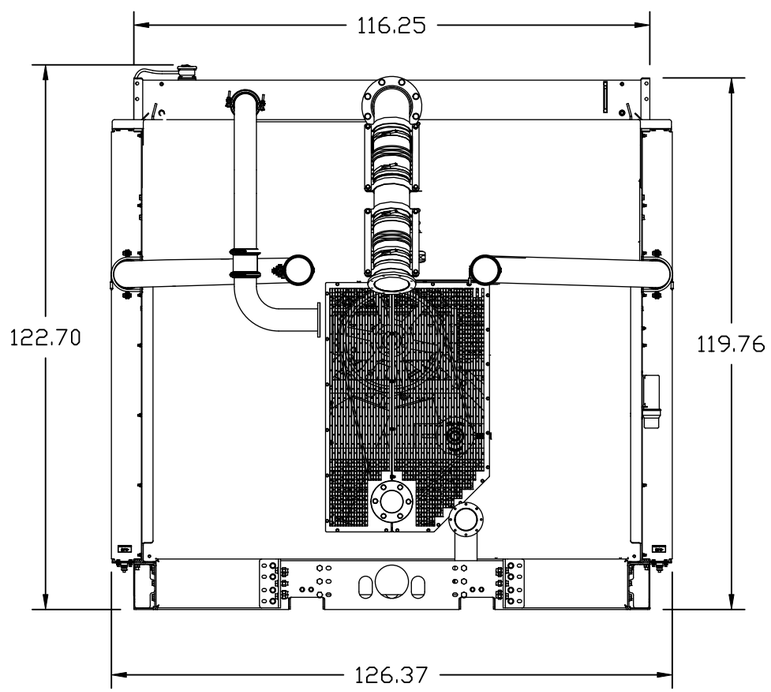

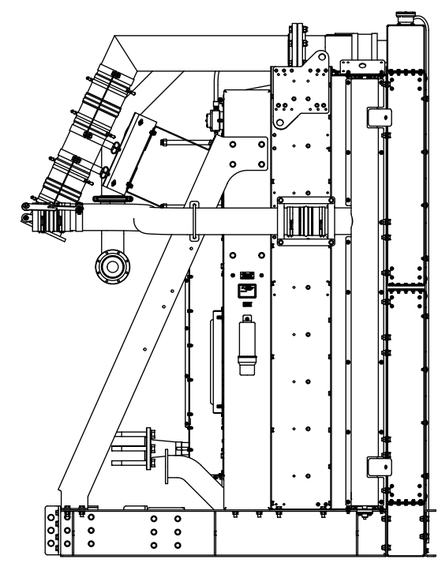

PRELIMINARY

BY: PB **DATE:** 9/20/24

DRAWING IS FOR ENVELOPE DIMENSIONS AND CONCEPT ONLY. DO NOT USE FOR CONSTRUCTION. ENGINEERED SUBMITTAL DRAWING WILL BE PROVIDED UPON COMPLETION OF DESIGN.

ECCS073S01-PRELIM
(PB 9/20/24)

PRELIMINARY

BY: PB **DATE:** 9/20/24

DRAWING IS FOR ENVELOPE DIMENSIONS AND CONCEPT ONLY. DO NOT USE FOR CONSTRUCTION. ENGINEERED SUBMITTAL DRAWING WILL BE PROVIDED UPON COMPLETION OF DESIGN.

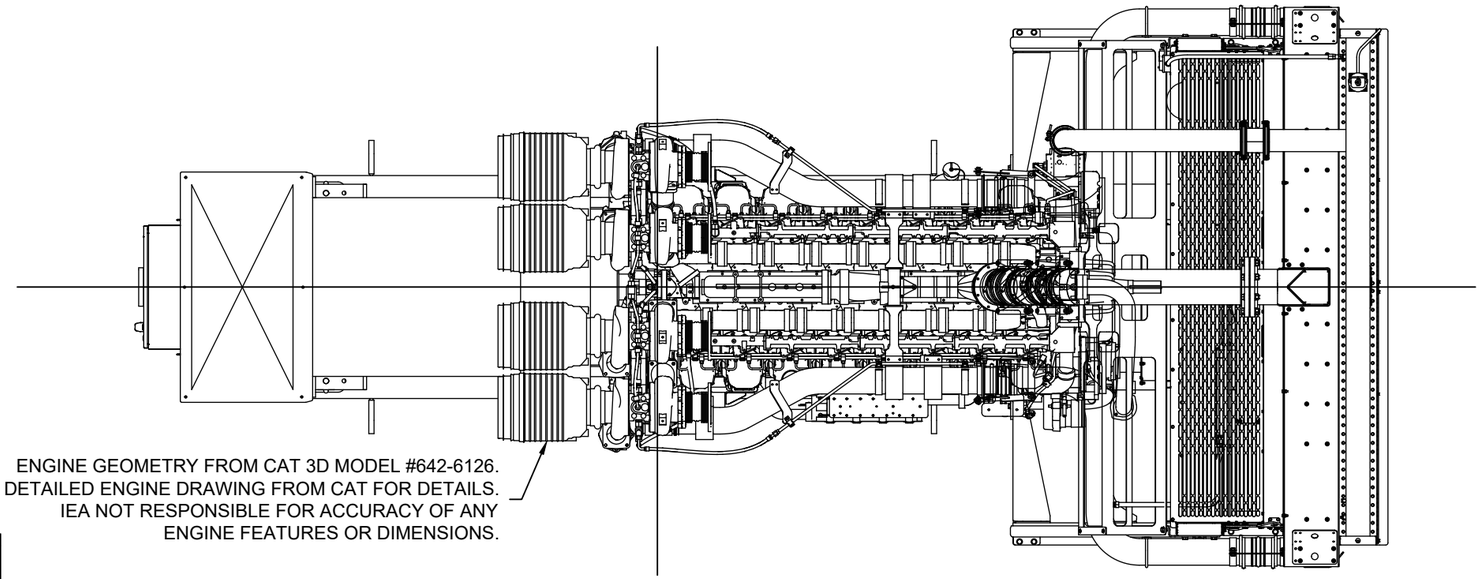

ENGINE GEOMETRY FROM CAT 3D MODEL #642-6126.
SEE DETAILED ENGINE DRAWING FROM CAT FOR DETAILS.
IEA NOT RESPONSIBLE FOR ACCURACY OF ANY
ENGINE FEATURES OR DIMENSIONS.

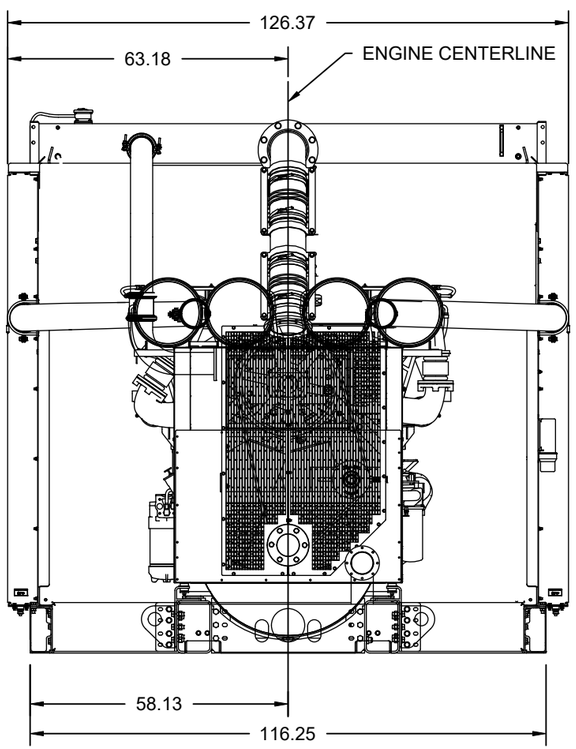

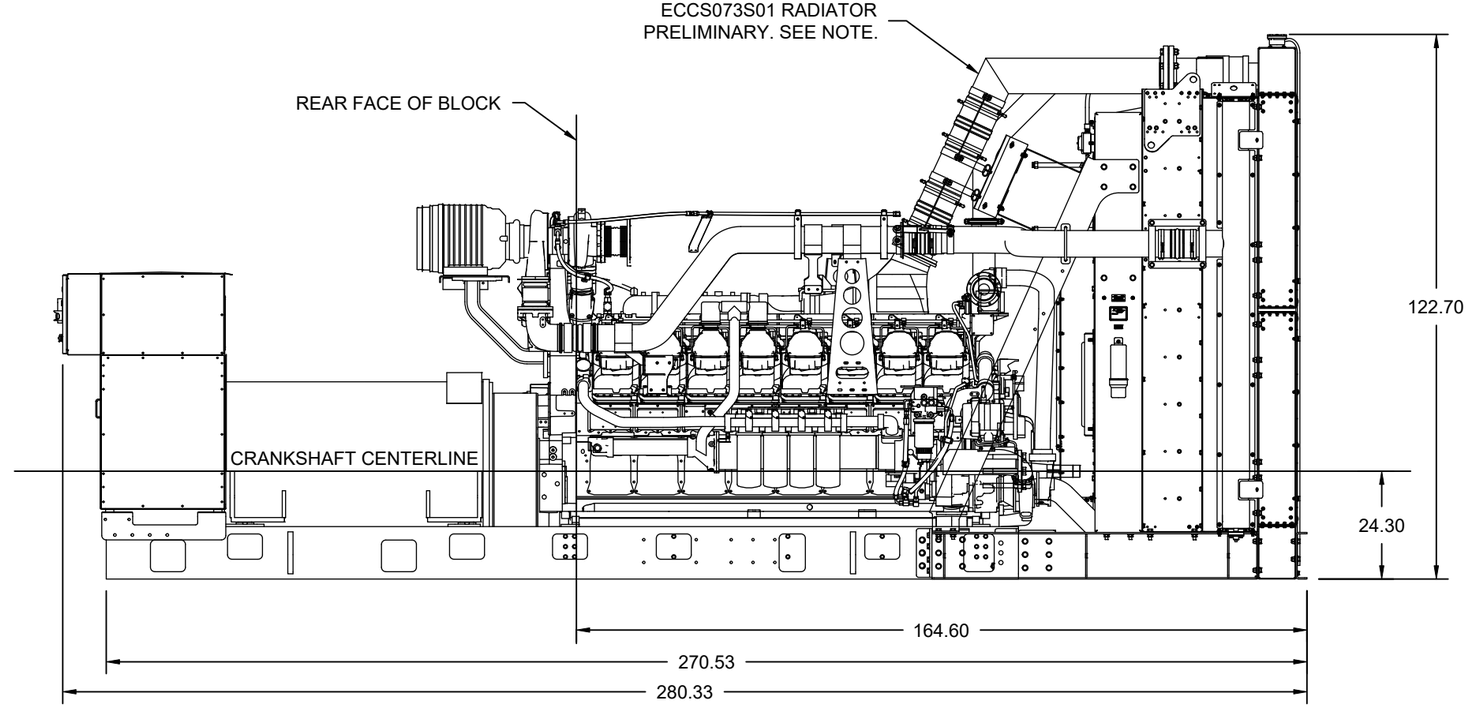

ECCS073S01-6466126-PRELIM
(PB 9/20/24)

SHEET SIZE - D

ECCS073S01

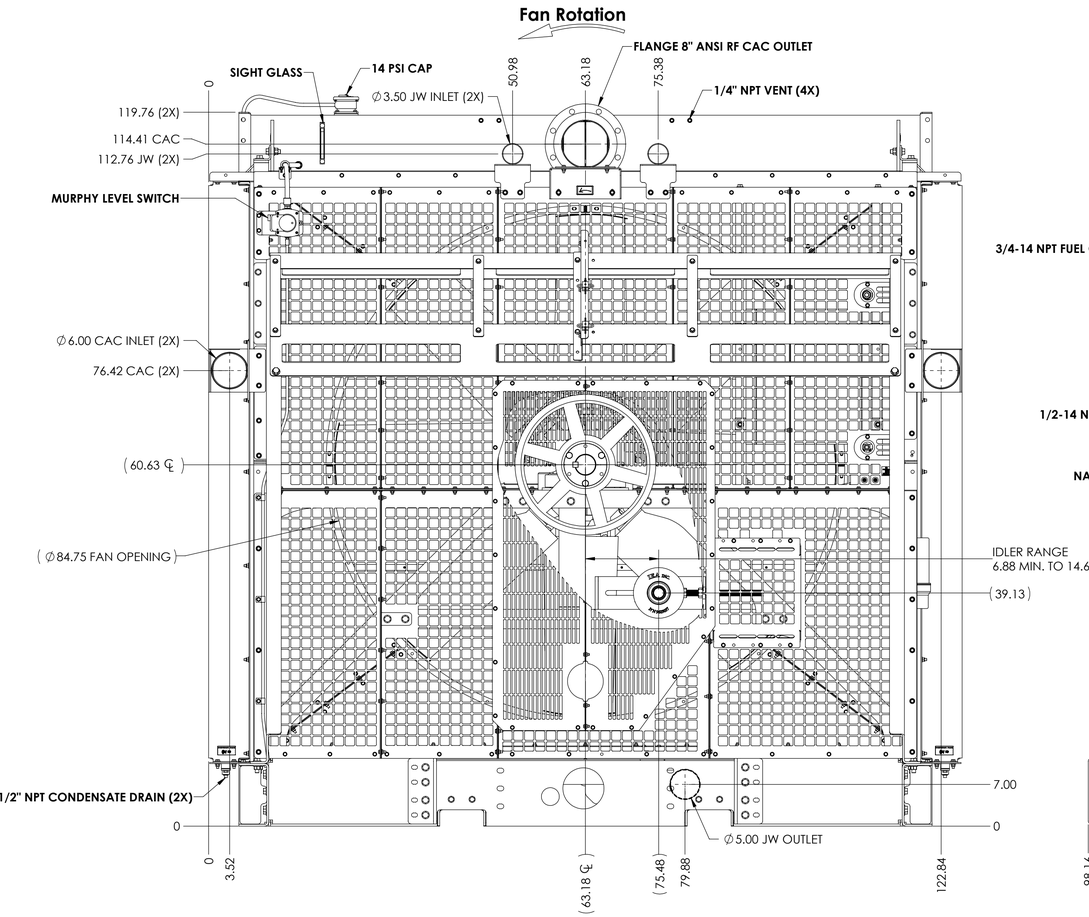

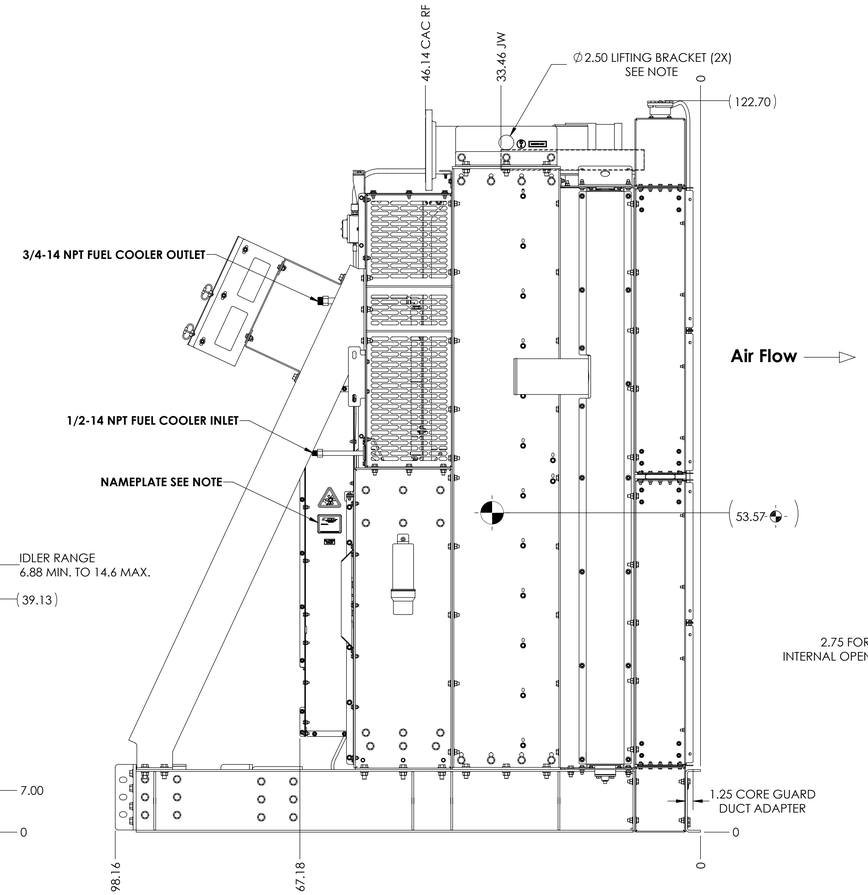

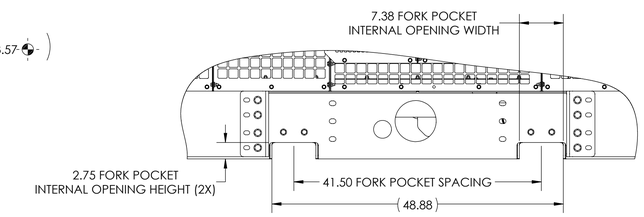

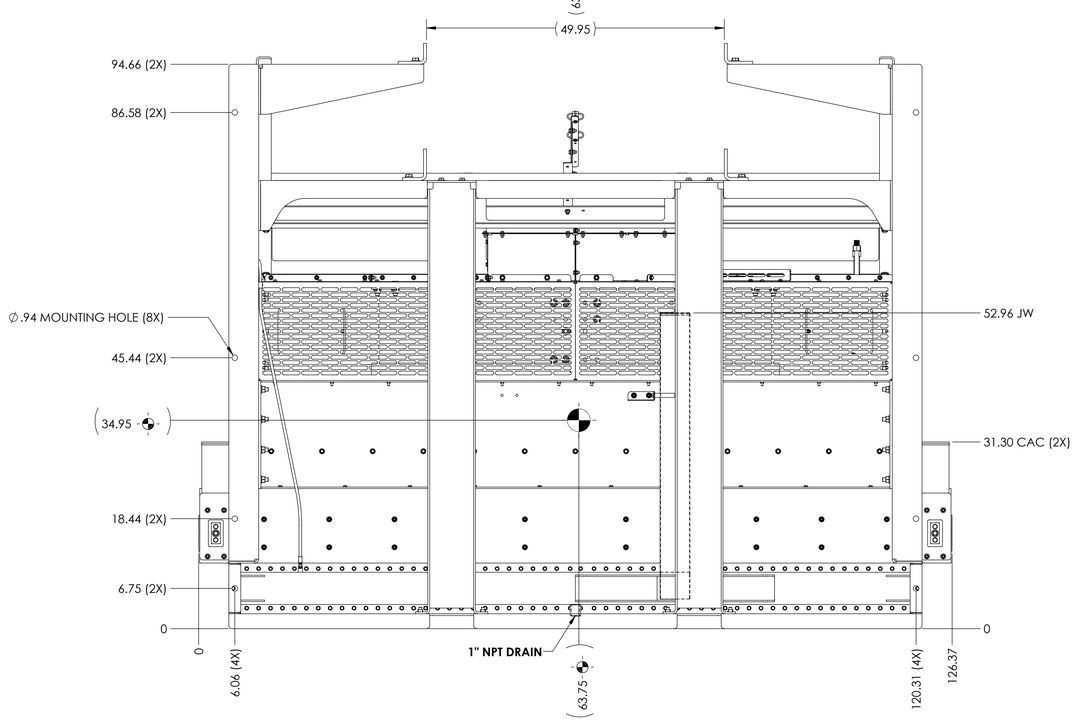

NOTES:

NAMEPLATE IS STAMPED WITH SERIAL (S.O.) NO.

LIFTING BRACKETS ARE RATED FOR DRY WEIGHT OF RADIATOR ONLY. RADIATOR LIFTING BRACKETS ARE NOT DESIGNED TO SUPPORT ANY ADDITIONAL WEIGHT OF ENGINE OR NON-IEA SUPPLIED ACCESSORIES. RADIATOR SUPPORT IS NOT DESIGNED TO SUPPORT FULL WEIGHT OF RADIATOR CANTILEVERED OFF OF ENGINE BASE. ISOLATORS OR SUPPORTS MUST BE PLACED UNDER RADIATOR SUPPORT. WHEN LIFTING ENGINE WITH RADIATOR INSTALLED LIFTING RIG MUST SUPPORT RADIATOR WEIGHT. RADIATOR LIFTING BRACKETS ARE NOT DESIGNED TO SUPPORT ENGINE.

UNIT IS NORMALLY SHIPPED WITH IDLER SLIDE PLATE LOCKING NUTS TIGHTENED, THESE MUST BE LOOSENED BEFORE ADJUSTING IDLER AND TIGHTENED AGAIN AFTER MAKING ADJUSTMENTS. REFER TO IOM MANUAL FOR COMPLETE DESCRIPTION.

LUBRICATE FAN DRIVE BEARINGS (2) PER RECOMMENDATION ON IOM MANUAL.

CENTER OF GRAVITY SHOWN FOR DRY WEIGHT OF THE UNIT ONLY.

JW COOLANT CAPACITY: 48.73 GALLONS*

*** CAPACITY DO NOT INCLUDE ENGINE OR PIPING.**

IMPORTANT JW INFO:
MAX. OPERATING PRESSURE: 20 P.S.I.
MAX. OPERATING TEMPERATURE: 225°F

IMPORTANT CAC INFO:
MAX. OPERATING PRESSURE: 50 P.S.I.
MAX. OPERATING TEMPERATURE: 500°F

REV.	Change #	DATE
A	24-322	11/6/2024

TOLERANCES: (DIMENSION ARE IN **INCHES**)

ANGULAR: ± 1 DEG.
ONE PLACE DECIMAL ±.3
TWO PLACE DECIMAL ±.19
THREE PLACE DECIMAL ±.063

BETWEEN CONNECTIONS ±.25
BETWEEN MOUNTINGS ±.25

TOLERANCES ARE NON-CUMULATIVE AND DO NOT APPLY TO MATERIAL GAGES OR COMMERCIAL FEATURES

"The Next Generation of Cool"

PROPERTY OF **IEA**, LLC.
CONFIDENTIAL PROPRIETARY INFORMATION

THIRD ANGLE PROJECTION | SCALE:1:12 | SHEET 1 OF 5

REF SPEC.	ES-3017	-	ENGINE MODEL: CAT - D3516E	APPROVED BY: RW	DATE: 10/15/24
	-	-		DRAWN BY: JI	

CUSTOMER, DWG. NO:	WEIGHT: POUNDS	**IEA**, DWG. NO:	REVISION
-	7656.53	**ECCS073S01**	**A**

DESCRIPTION:
RAD 9DJ6/45RN1 WB/FC/ML

PR-NO: **01**

SHEET SIZE - D

ECCS073S01

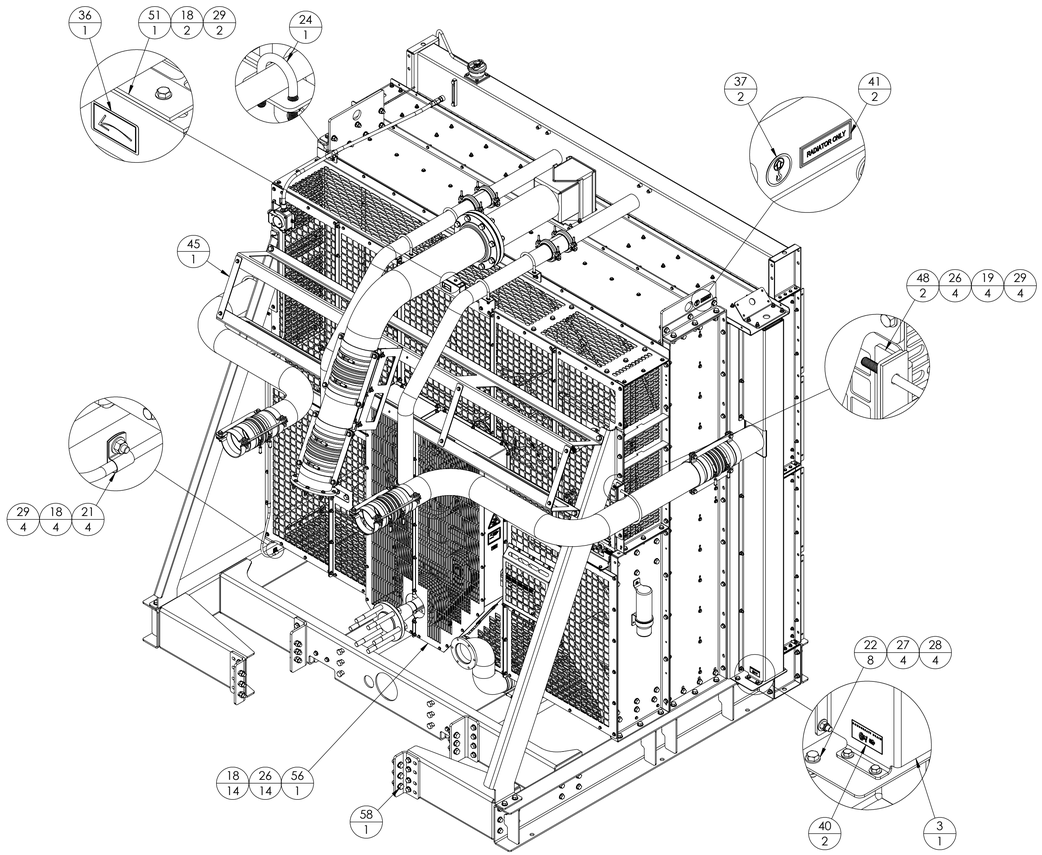

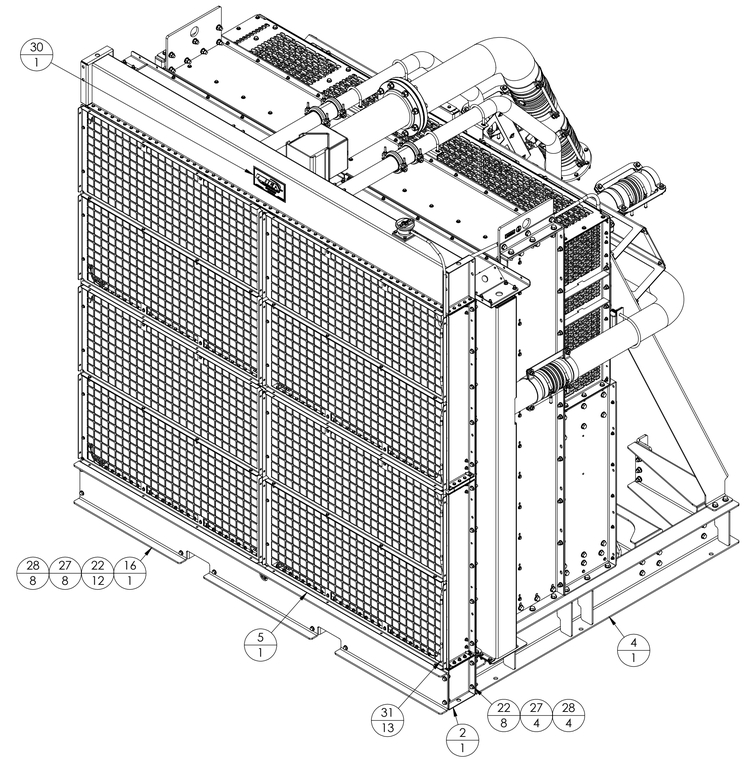

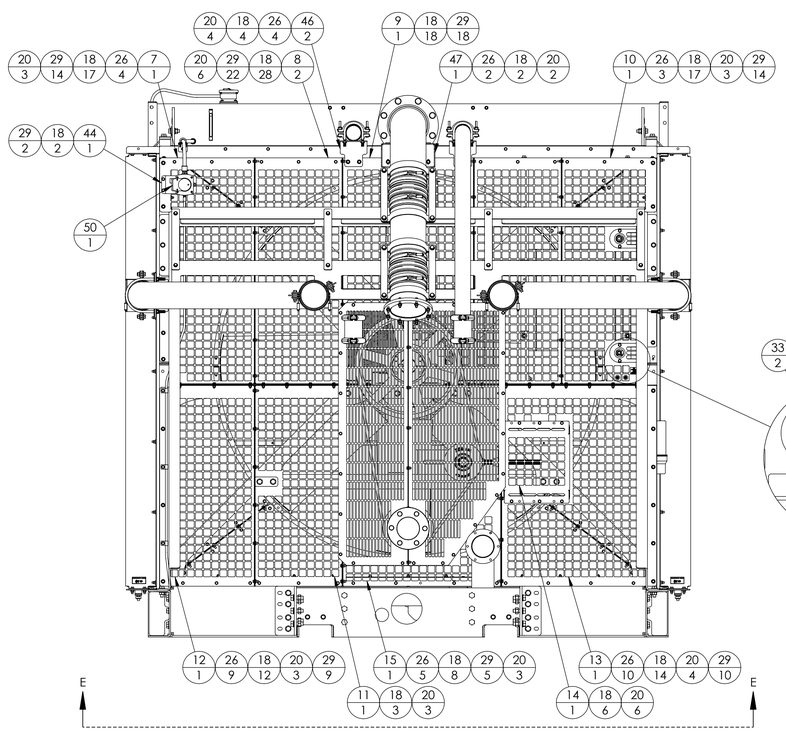

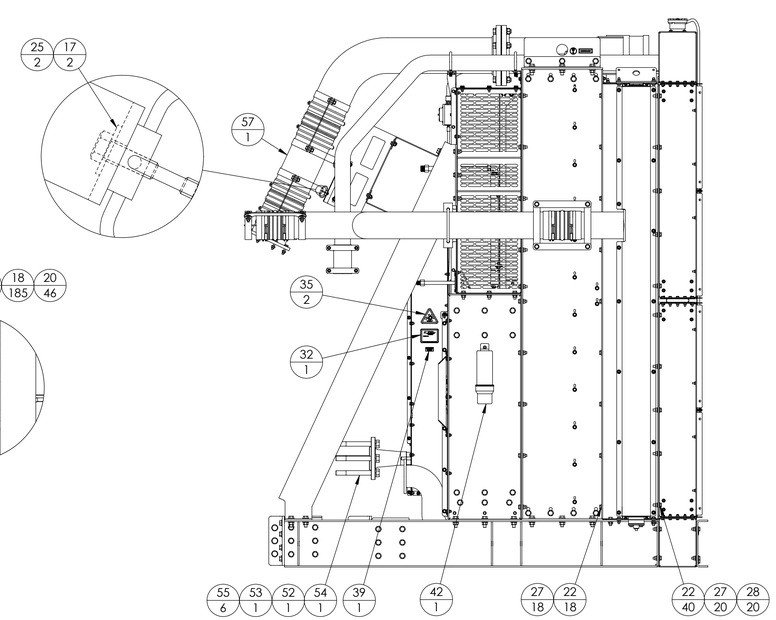

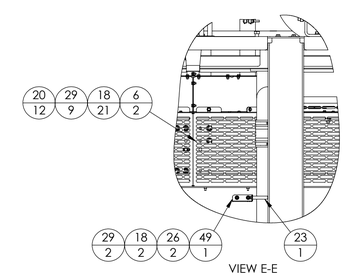

VIEW E-E

ITEM NO.	PART NUMBER	DESCRIPTION	QTY	SHIP LOOSE
1	0000117	PAINT OUTSIDE (POWDER) ONE SQUARE FOOT	1349	
2	2907820	COOL SECT 73.0 9DJ6	1	
3	2907821	COOL SECT 73.0 45RN1 CAC	1	
4	2907822	BACK SECTION ECCS073 157HP 858RPM	1	
5	3301218A	GUARD CORE GROUP-73SQFT W/HARDWARE	1	
6	3411413	GUARD FAN PANEL BOTTOM	2	
7	3411414	GUARD FAN PANEL PERIMETER #1	1	
8	3411415	GUARD FAN PANEL PERIMETER #2	2	
9	3411416	GUARD FAN PANEL PERIMETER #3	1	
10	3411417	GUARD FAN PANEL PERIMETER #4	1	
11	3411418	GUARD FAN PANEL PERIMETER #5	1	
12	3411419	GUARD FAN PANEL PERIMETER #6	1	
13	3411420	GUARD FAN PANEL PERIMETER #7	1	
14	3411421	GUARD FAN PANEL PERIMETER #8	1	
15	3411422	GUARD FAN PANEL PERIMETER #9	1	
16	5102876	CHANNEL REAR WISHBONE MOUNT	1	
17	8201008	WASHER FLAT ZPS 1/4"	2	X
18	8202024	BOLT SER GR8 5/16-18 X 1.00L	185	
19	8202025	BOLT SER GR8 5/16-18 X 1.25L	4	
20	8202031	NUT U 5/16-18 X .562 FOR .025-.15 MATRL	46	
21	8209043	CLIP HOSE 0.03 CRS	4	
22	8209062	WASHER FLAT ZPS 1/2"	86	
23	8209138	U-BOLT W/ BRACKET 5.0" 3/8-16THD	1	
24	8209149	U-BOLT W/O BRKT 1.0" 1/4-20 THRD	1	
25	8211002	BOLT HH GR8 ZPS 1/4-20 x .75L	2	X
26	8211018	WASHER FLAT HARD ZPS 5/16"	55	
27	8211044	BOLT HH GR8 ZPS 1/2-13 x 1.50L	54	
28	8211050	NUT HEX GR8 ZPS 1/2-13	32	
29	8219175	NUT HH NYLON LOCK FLNGD GR8 ZPS 5/16-18	107	
30	8401029	LABEL, IEA PLASTICAL 5" x 10", STICKER	1	
31	8401119	HOSE OVERFLOW 3/8"ID (9/16"OD) RUBBER	13	
32	8401225	LABEL, IEA (GENERIC), STICKER	1	
33	8401335	GROMMET RUBBER 1.750 ID FOR .187 MTRL	2	
34	8401523	MANUAL IOM IEA	1	X
35	8402212	LABEL FAN BLADE WARNING STICKER	2	
36	8402213	LABEL FAN ROTATE DIRECTION SIZE L STICKER	1	
37	8402276	LABEL LIFTING POINT 1.50" DIA STICKER	2	
38	8403659	LABEL BEARING LUBRICATION STICKER	1	
39	8407072	LABEL PATENT 7,703,282 STICKER	1	
40	8407077	LABEL CONDENSATION DRAIN STICKER	2	
41	8408089	LABEL RADIATOR ONLY STICKER	2	
42	8409076A	CANISTER LARGE MANUAL TOOL TUBE ASSY	1	
43	8409926	COVER PLATE FUEL COOLER	2	
44	8410925	BRACKET LEVEL SWITCH ECCS060	1	
45	8412051	PIPE SUPPORT GROUP ECCS073 D3516E	1	
46	8412078	BRACKET SUPPORT JW 3.50" CONN	2	
47	8412079	BRACKET SUPPORT CAC 8" CONN	1	
48	8412080	BRACKET SUPPORT CAC 6" CONN	2	
49	8412081	SUPPORT BRACKET JW 5" CONN	1	
50	8412083	MURPHY LEVEL ASSY	1	
51	8412084	SILICONE STRIP .18" T 2"W 10"L W/HOLE	1	
52	9602318	BUSHING E X 2 3/4	1	X
53	9602372	SHEAVE 6-5V-11.30E	1	X
54	9602706	SHAFT STUB GROUP 14"L	1	X
55	9602843-32	V-BELT 5VX1320	6	X
56	9804682	GUARD BELT ASSY ECCS073	1	
57	9806725	CONN WATER/ATAAC GROUP-73F/3516E	1	X
58	9908585	WISHBONE MOUNTING KIT ECCS072/3512C	1	X

TOLERANCES: (DIMENSION ARE IN **INCHES**)

ANGULAR: ± 1 DEG.
ONE PLACE DECIMAL ±.3
TWO PLACE DECIMAL ±.19
THREE PLACE DECIMAL ±.063

BETWEEN CONNECTIONS ±.25
BETWEEN MOUNTINGS ±.25

TOLERANCES ARE NON-CUMULATIVE AND DO NOT APPLY TO MATERIAL GAGES OR COMMERCIAL FEATURES

"The Next Generation of Cool"

PROPERTY OF **IEA**, LLC.
CONFIDENTIAL PROPRIETARY INFORMATION

THIRD ANGLE PROJECTION | SCALE:1:16 | SHEET 2 OF 5

REF SPEC.	ES-3017	-	ENGINE MODEL: CAT - D3516E	APPROVED BY: RW	DATE:
	-	-		DRAWN BY: JI	10/15/24
CUSTOMER, DWG. NO: -			WEIGHT: POUNDS 7656.56	**IEA**, DWG. NO: **ECCS073S01**	REVISION **A**
DESCRIPTION: **RAD 9DJ6/45RN1 WB/FC/ML**					PR-NO: **01**

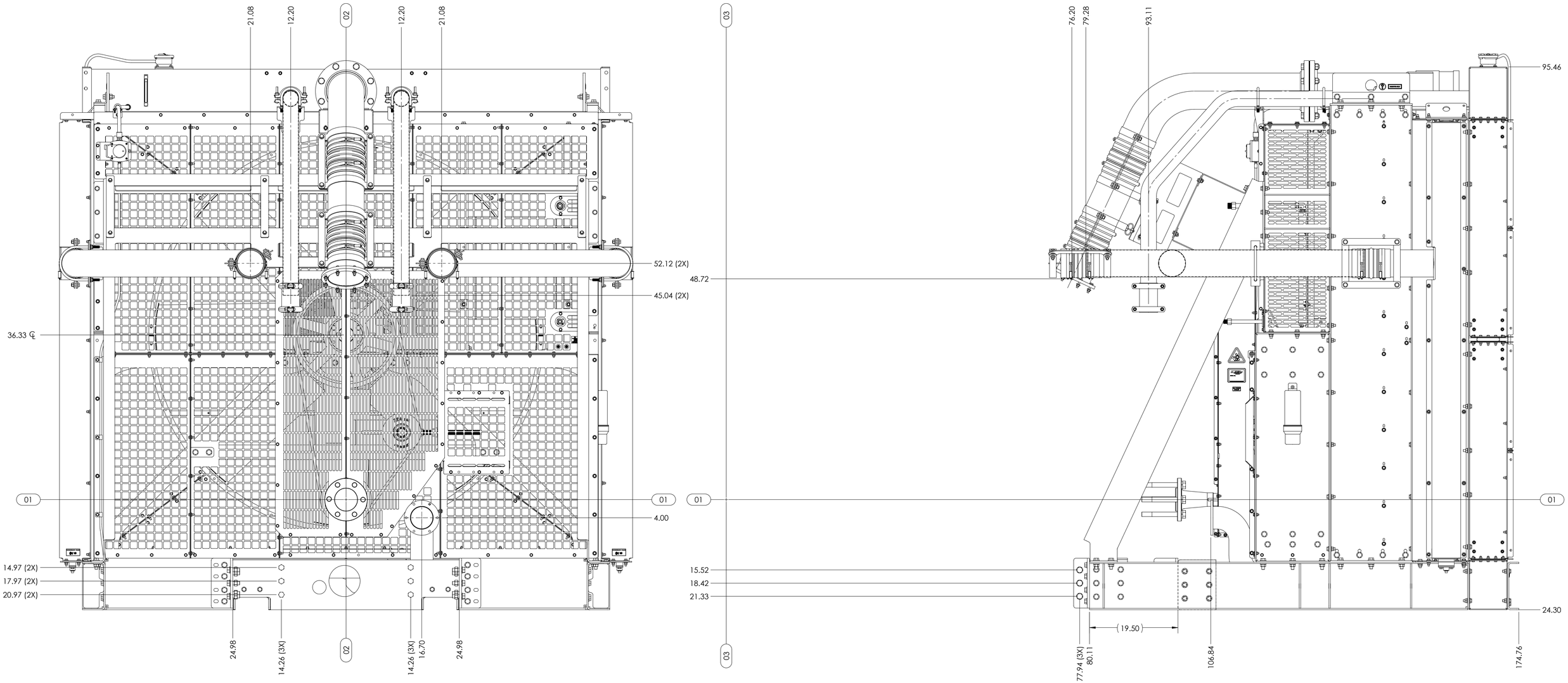

01 **CENTERLINE OF CRANKSHAFT**

02 **CENTERLINE OF UNIT**

03 **REAR FACE OF CYLINDER BLOCK**

ALL DIMENSIONS ARE REFERENCE ONLY

TOLERANCES: (DIMENSION ARE IN **INCHES**)

ANGULAR: ± 1 DEG.
ONE PLACE DECIMAL ±.3
TWO PLACE DECIMAL ±.19
THREE PLACE DECIMAL ±.063

BETWEEN CONNECTIONS ±.25
BETWEEN MOUNTINGS ±.25

TOLERANCES ARE NON-CUMULATIVE AND DO NOT APPLY TO MATERIAL GAGES OR COMMERCIAL FEATURES

"The Next Generation of Cool"

PROPERTY OF **IEA**, LLC.
CONFIDENTIAL PROPRIETARY INFORMATION

THIRD ANGLE PROJECTION | SCALE:1:10 | SHEET 3 OF 5

REF SPEC.	ES-3017	-	ENGINE MODEL: CAT - D3516E	APPROVED BY: RW	DATE:
	-	-		DRAWN BY: JI	10/15/24
CUSTOMER, DWG. NO: -			WEIGHT: POUNDS 7656.56	**IEA**, DWG. NO: **ECCS073S01**	REVISION **A**
DESCRIPTION: **RAD 9DJ6/45RN1 WB/FC/ML**					PR-NO: **01**

SHEET SIZE - D

ECCS073S01

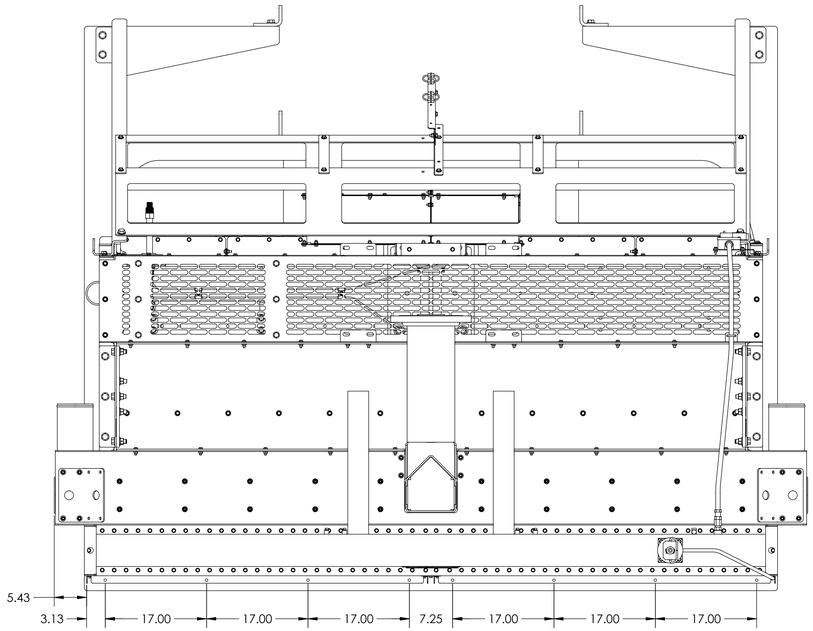

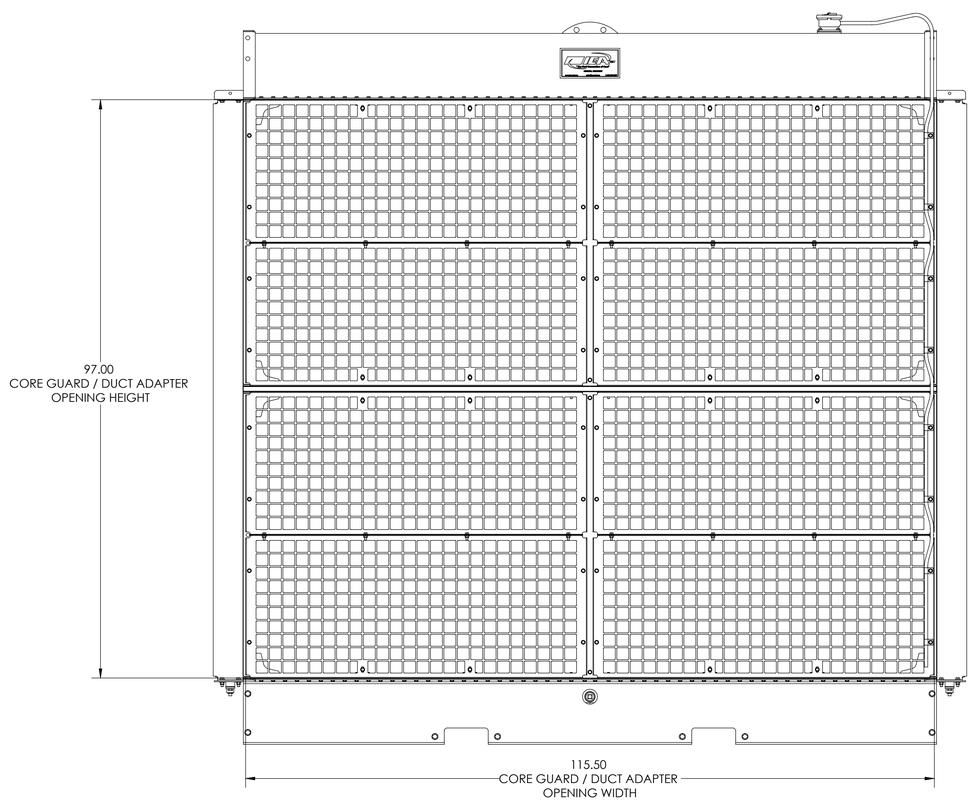

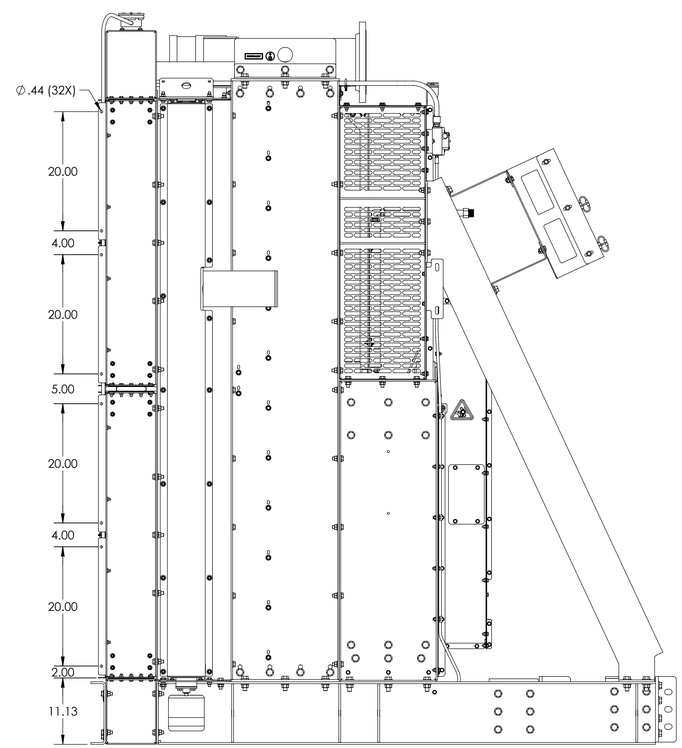

CORE GUARD / DUCT ADAPTER OPENING DIMENSION

TOLERANCES: (DIMENSION ARE IN **INCHES**)

ANGULAR: ± 1 DEG.
ONE PLACE DECIMAL ±.3
TWO PLACE DECIMAL ±.19
THREE PLACE DECIMAL ±.063

BETWEEN CONNECTIONS ±.25
BETWEEN MOUNTINGS ±.25

TOLERANCES ARE NON-CUMULATIVE AND DO NOT APPLY TO MATERIAL GAGES OR COMMERCIAL FEATURES

"The Next Generation of Cool"

PROPERTY OF **IEA**, LLC.
CONFIDENTIAL PROPRIETARY INFORMATION

THIRD ANGLE PROJECTION

SCALE:1:12 | SHEET 4 OF 5

REF SPEC.	ES-3017	-	ENGINE MODEL: CAT - D3516E	APPROVED BY: RW	DATE:
	-	-		DRAWN BY: JI	10/15/24

CUSTOMER, DWG. NO:	WEIGHT: POUNDS	**IEA**, DWG. NO:	REVISION
-	7656.53	**ECCS073S01**	**A**

DESCRIPTION:
RAD 9DJ6/45RN1 WB/FC/ML

PR-NO: **01**

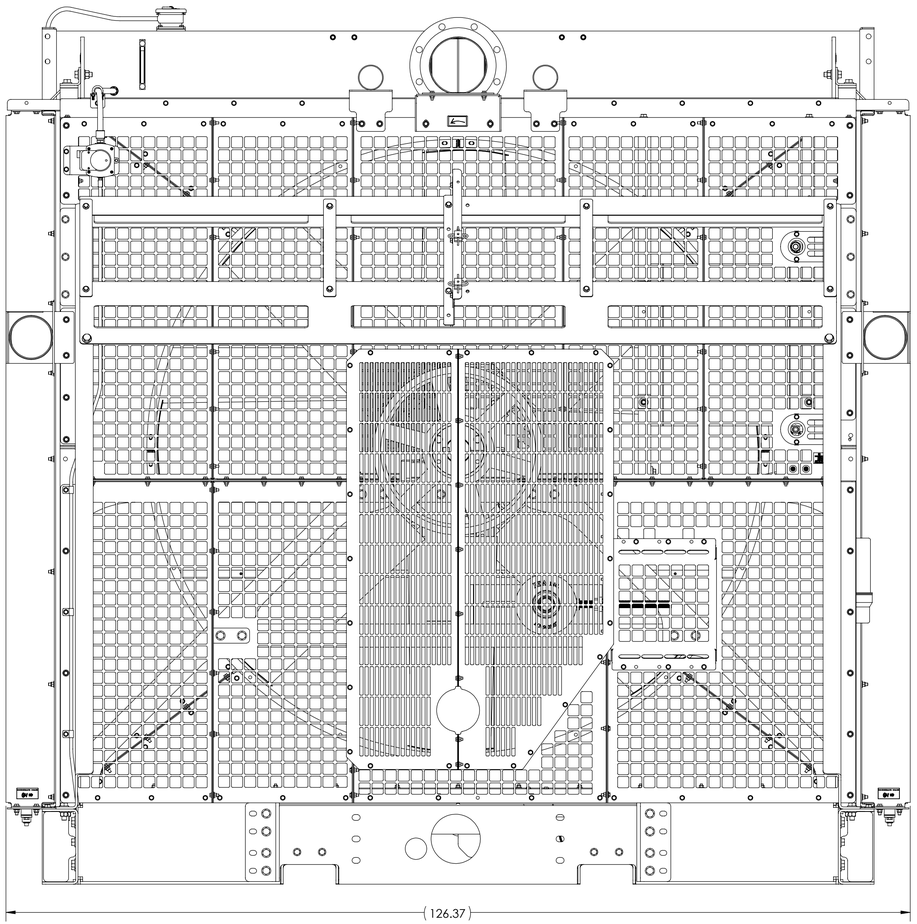

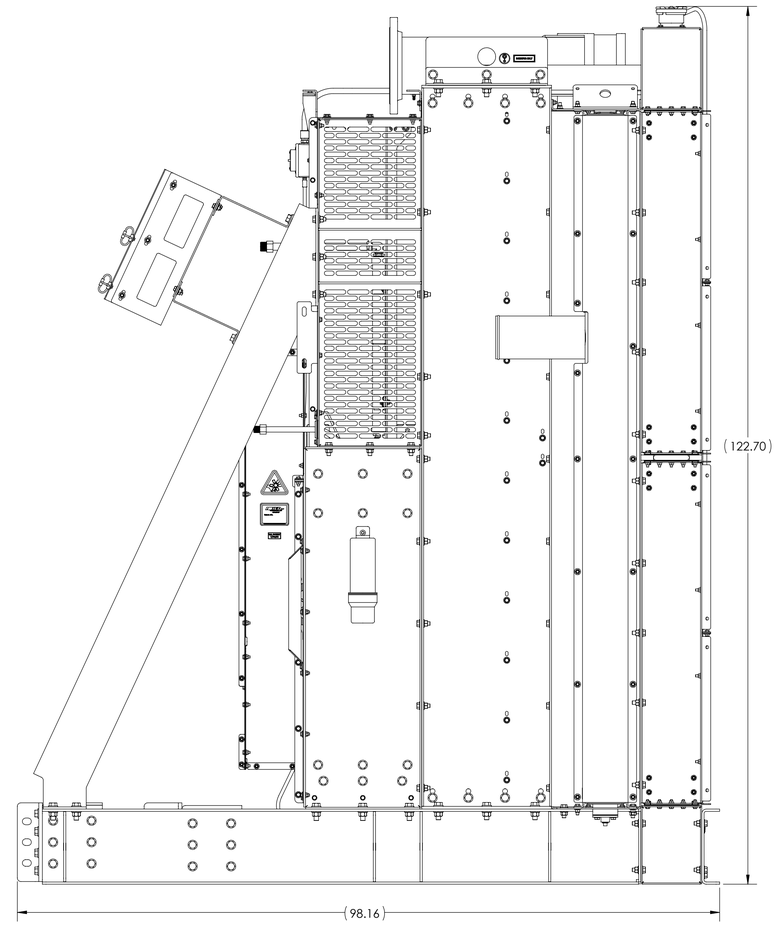

SHIPPING ORIENTATION

TOLERANCES: (DIMENSION ARE IN **INCHES**)

ANGULAR: ± 1 DEG.
ONE PLACE DECIMAL ±.3
TWO PLACE DECIMAL ±.19
THREE PLACE DECIMAL ±.063

BETWEEN CONNECTIONS ±.25
BETWEEN MOUNTINGS ±.25

TOLERANCES ARE NON-CUMULATIVE AND DO NOT APPLY TO MATERIAL GAGES OR COMMERCIAL FEATURES

"The Next Generation of Cool"

PROPERTY OF **IEA,** LLC.
CONFIDENTIAL PROPRIETARY INFORMATION

THIRD ANGLE PROJECTION | SCALE:1:10 | SHEET 5 OF 5

REF SPEC.			ENGINE MODEL:	APPROVED BY: RW	DATE:
	ES-3017	-	CAT - D3516E	DRAWN BY: JI	10/15/24
	-	-			

CUSTOMER, DWG. NO:	WEIGHT: POUNDS	**IEA,** DWG. NO:	REVISION
-	7656.53	**ECCS073S01**	**A**

DESCRIPTION:
RAD 9DJ6/45RN1 WB/FC/ML

PR-NO: **01**

IDENT	DIAGRAM 626-0661 NOTE A	DIAGRAM 4913960 NOTE B	HARNESS PART NUMBER	HARNESS DESCRIPTION	SHEET	LOCATION	GROUP PART NUMBER	GROUP DESCRIPTION	USAGE
AA		X	541-6769	HARNESS AS (ECL)			542-1120	WIRING GP (ECL)	ECL
AC		X	567-9933	HARNESS AS (SECONDARY)	10	C-165	567-1820	WIRING GP (4 PT CONNECTION	4 PT CONNECTION
					10	C-167	567-3920	WIRING GP (SINGLE PT	SINGLE PT
					10	C-169	567-3920	WIRING GP (THREE PT	THREE PT
AD		X	537-8461	HARNESS AS (ARC)	9	C-186	537-1820	WIRING GP (ARC	ARC
AE		X	567-8934	HARNESS AS (PRIMARY)	10	C-163	567-1820	WIRING GP (4 PT CONNECTION	4 PT CONNECTION
					10	C-165	567-3920	WIRING GP (SINGLE PT	SINGLE PT
					10	C-167	567-3920	WIRING GP (THREE PT	THREE PT
AF		X	567-9339	HARNESS AS (MV-Bus)	10	C-163	567-1820	WIRING GP (4 PT CONNECTION	4 PT CONNECTION
AG		X	567-9940	HARNESS AS (MV-Bus)	10	C-165	567-3920	WIRING GP (SINGLE PT	SINGLE PT
AH		X	567-9941	HARNESS AS (MV-Bus)	10	C-167	567-3920	WIRING GP (THREE PT	THREE PT
AJ		X	513-8013	HARNESS AS	10	B-179	513-8020	WIRING GP	BREAKER CONNECTION FROM PT
AM		X	513-8013	HARNESS AS	10	B-179	513-8020	WIRING GP	BREAKER CONNECTION FROM PT
AP		X	491-2012	MED VOLT (SECONDARY PT	9	C-105	491-2010	WIRING GP (MED VOLT PT	MEDIUM VOLTAGE - 3300V / 4160V
AR		X	491-2013	MED VOLT (PRIMARY PT	9	C-105	491-2010	WIRING GP (MED VOLT PT	MEDIUM VOLTAGE - 3300V / 4160V
AV		X	500-8769	MED VOLT BUS	10	C-168	490-1844	WIRING GP (MED VOLT PT	MEDIUM VOLTAGE - 3300V / 4160V
					9	C-107	491-2010	WIRING GP (MEDIUM VOLT PT - 7400 V)	MEDIUM VOLTAGE - 3300V / 4160V
BC		X	422-9001	HARNESS AS	10	C-169	422-1820	CONNECTION GP - ELECTRICAL (BATTERY CHARGER)	ENCLOSURE - BATTERY CHARGER
BE		X	422-9002	MCP 4.28 (EXCIT BREAKER PUSH BUTTON	10	C-169	422-1820	CONNECTION GP - ELECTRICAL (BATTERY CHARGER)	ENCLOSURE (MCP 4.28 EXCIT - RECESSED CMCP)
CB		X	577-9609	HARNESS AS (LV VR PANEL SENSING)	9	F-161	577-6830	PANEL GP - ELECTRONIC (EMCP 4.4 GAS)	3500 GAS (MCP 4.4 OPTION
					9	F-163	577-6830	PANEL GP - ELECTRONIC (EMCP 4.4 GAS)	PACKAGE MOUNTED CONTROL PANEL WITH COVR
CM		X	581-6866	HARNESS AS	9	J-155	581-1820	WIRING GP (BUS LV 480 COVR 16-1B0S)	MEDIUM VOLTAGE - COVR OPTION
CN		X	551-9619	CAN2 OPTIONS-BASIC WIRING	9	C-14	551-3920	WIRING GP (CAN2 OPTIONS DOOR	CAN 2 (STRICT PORT ON THE PANEL DOOR
	X	X	551-9620	CAN2 OPTIONS-DOOR WIRING	9	C-14	551-3920	WIRING GP (CAN2 OPTIONS DOOR	CAN 2 (STRICT PORT ON THE PANEL DOOR
CT		X	565-1542	HARNESS AS (MV DIFF CTS)	10	C-171	565-3920	WIRING GP (MV DIFF CTS)	MEDIUM VOLTAGE - 3300V / 4160V
					10	C-173	565-3920	WIRING GP (MV DUAL DIFF CTS)	DIFF CTS
DC		X	577-9609	HARNESS AS	9	F-161	577-6830	WIRING GP (DIESEL ENG INTFC INTERCONNECT	GRID CODE LOW VOLTAGE SVC-550 OPTION
DM		X	632-3582	DIESEL MAIN TO ELM	9	F-161	632-6830	WIRING GP (DIESEL ENG INTFC INTERCONNECT	
DP		X	632-3583	HARNESS AS (3500B - GRID CODE)	11	F-187	632-6830	WIRING GP (ELM 3500 WITH REMOTE MOUNTED PANEL)	
E		X	496-1428	HARNESS AS (ENGINE INTERFACE - REMOTE MOUNT (MCP - - SM LENGTH)	9	C-103	496-1435	WIRING GP (ELM 3500 WITH REMOTE MOUNTED PANEL) - - SM LENGTH)	3500 (NON MULTI WITH REMOTE MOUNTED PANEL
			496-1429	HARNESS AS (ENGINE INTERFACE - REMOTE MOUNT - MCP - - 20M			496-1435	WIRING GP (ELM 3500 WITH REMOTE MOUNTED PANEL) - 20M LENGTH)	3500 (NON MULTI WITH REMOTE MOUNTED PANEL
EA		X	496-1442	C175-16 ENGINE INTERFACE PKG MOUNT	9	C-103	496-1435	WIRING GP (C175 ENG INTERFACE)	C175-16 WITH PACKAGE MOUNTED CONTROL
EB		X	496-1443	HARNESS AS (3500 STAND BY INTFC)	9	C-103	496-1435	WIRING GP	
			496-1728	HARNESS AS (G3516 STAND BY INTFC)			496-1735	WIRING GP	
			496-1729	HARNESS AS (G3516 STANDBY INTFC)	9	C-103	496-1735	WIRING GP (G3516 DSL STANDBY INTFC	
			496-8191	HARNESS AS (G3516 DSL - SM REMOTE			7-116		
			496-8192	HARNESS AS (G3516 DSL - 20M REMOTE			7-116		
			496-8193	HARNESS AS (G3516 DSL - 20M REMOTE			7-116		
EC		X	544-8203	C175-16 (TIER4) ENGINE INTERFACE EXTENSION	9	C-10	544-0864	WIRING GP (C175-16 TA) ENG INTERFACE (EXTENSION)	
EE		X	496-1429	HARNESS AS (C3500 6GHZ (M INTFC) DIAGRAM 5404283	9	C-103	496-1435	WIRING GP (C3500 ON PACKAGE CONTROL	C3500 ON PACKAGE CONTROL
EJ		X	499-1339	C27 ENGINE INTERFACE PKG MOUNT	9	C-119	499-1335	WIRING GP (ENGINE (C32) C27) ENGINE INTERFACE)	ENGINE (C32) C27) WITH PACKAGE MOUNTED PANEL
EL		X	499-1340	C27 ENGINE INTERFACE (EXTENSION)	9	C-119	499-1335	WIRING GP	PACKAGE MOUNTED CONTROL PANEL
EL (EE)		X	544-8203	C175-16 (TIER4) ENGINE INTERFACE (EXTENSION)	9	C-10	544-0864	WIRING GP (C175-16 TA) ENG INTERFACE (EXTENSION)	3500 (C175-16 GAS GENERATOR
EN		X	496-1429	HARNESS AS (C3500 6GHZ (M INTFC) DIAGRAM 5404283	9	C-103	496-1435	WIRING GP (C3500 ON PACKAGE CONTROL	C3500 ON PACKAGE CONTROL
EP		X	499-1339	C32 ENGINE INTERFACE PKG MOUNT	9	C-119	499-1335	WIRING GP (ENGINE (C32) C27) ENGINE INTERFACE)	ENGINE (C32) C27) WITH PACKAGE MOUNTED PANEL
ER		X	499-1340	C32 ENGINE INTERFACE (EXTENSION)	9	C-119	499-1335	WIRING GP	PACKAGE MOUNTED CONTROL PANEL
ET		X	567-9469	HARNESS AS (G3500 ENG INTERFACE) DIAGRAM 5404087	9	K-98	567-0460	WIRING GP (G3500 ENGINE INTERFACE) DIAGRAM 5404087	3500 (C175-16 GAS GENERATOR
			499-7968	C175-16 ENGINE INTERFACE EXTERNAL 5-SM	9	C-10	499-7966	WIRING GP (ENGINE (REMOTE PANEL) C32 27 5SM)	27) C32 WITH REMOTE MOUNTED PANEL
			499-7969	C175-16 ENGINE INTERFACE EXTERNAL 20M			499-7966	WIRING GP (ENGINE (REMOTE PANEL) C32 27 20M)	27) C32 WITH REMOTE MOUNTED PANEL
			499-7970	C175-16 ENGINE INTERFACE (EXTENSION)	9	C-10	499-7966	WIRING GP	
FJ		X	499-7968	C175-16 ENGINE INTERFACE (-5M)	9	C-105	499-7966	WIRING GP (C175-16) C175-20) WITH REMOTE MOUNTED PANEL) (-5M)	C175-16) C175-20 WITH REMOUNTED PANEL
			499-7969	C175-16 ENGINE INTERFACE - REMOTE PANEL (-20M)	9	C-105	499-7966	WIRING GP (C175-16) C175-20 WITH REMOTE MOUNTED PANEL)	C175-16) C175-20 WITH REMOUNTED PANEL
K (ED)		X	551-9969	HARNESS AS (G3500 DSL - SM REMOTE	9	F-205	551-1820	WIRING GP (DIAGRAM 5404390	3500 OFF PACKAGE CONTROL
			551-9970	HARNESS AS (G3500 DSL - 20M REMOTE	9	F-205	551-1820	WIRING GP	3500 OFF PACKAGE CONTROL
KM		X	551-9969	(ENG INTFC MULT EMCP 4.2)	9	51K-1990	551-1820	WIRING GP (ENGINE (3500 MUL ENGINE INTERFACE)	3500 MULTI WITH REMOTE MOUNTED PANEL
KN		X	551-9969	HARNESS AS (MULTI-EIM 3500 REM MOUNT (MCP) - SM)	9	K-10	51K-1990	WIRING GP (MULTI-EIM 3500 REM MOUNT (MCP) - SM)	3500 MULTI WITH REMOUNTED PANEL (-SM)
			551-9970	HARNESS AS (MULTI-EIM 3500 REM MOUNT (MCP-20M)			51K-1990	WIRING GP (MULTI-EIM 3500 REM MOUNT (MCP-20M)	3500 MULTI WITH REMOUNTED PANEL (-20M)
KP (ED)		X	549-6313	HARNESS AS (G3500H 60HZ (M INTFC)	9	C-115	549-6300	DIAGRAM 5404828	
L		X	629-3934	HARNESS AS (ESTOP	9	C-10	629-3934	WIRING GP (ENGINE (C-STOP	ENGINE MOUNTED E-STOP (USED WITH REMOTE MOUNTED PANEL)
LF		X	496-7439	HARNESS AS (G3516(TA) ENGINE INTERFACE (EXTENSION)	9	C-103	496-1435	WIRING GP (G3516(TA) ENGINE INTERFACE (EXTENSION)	ALL 3516(B-J) 3516 TA
LG		X	551-9969	HARNESS AS (3500 PKG MOUNT)	9	C-10	551-1820	WIRING GP (3500 (ENGINE INTERFACE)	3500 (C175-16 GAS GENERATOR PACKAGE MOUNTED PANEL
LJ		X	551-1340	HARNESS AS (3516 GEARBOX (NO INTFC, PKG MOUNT)	9	C-10	551-1340	WIRING GP (ENGINE (3516 GEARBOX (ENGINE INTERFACE, PKG MNT)	3516 GEARBOX (800 FRAME GENERATOR
LK		X	551-9969	HARNESS AS (ECL (ED)	9	C-35	551-3920	WIRING GP (ALARM (ECL (ED)	3500 (ECL) WITH MODULE OPTION
L (ED)		X	551-7969	ECL (ED) PWR-CAN	9	C-16	551-3920	WIRING GP (ALM ECL DIO	ON FOR 3500 (PANEL REQD
LP		X	551-9969	HARNESS AS (3500FR HIGH VOLT PRIMARY)	9	C-99	551-1820	WIRING GP (MV PT	3500 FRAME GENERATOR
LV		X	551-9969	HARNESS AS (MEDIUM VOLT PT - 7400 V)	9	C-99	551-1820	WIRING GP (MEDIUM VOLT PT - 7400 V)	3500 MEDIUM VOLTAGE
LW		X	551-9969	HARNESS AS (HIGH VOLT PT PRIMARY)	9	C-99	551-1820	WIRING GP (MV PT	3500 FRAME GENERATOR
GA		X	551-9969	HARNESS AS (GOV CONTROLS)	9	D-82	551-6460	WIRING GP (G3500 GOV)	3500A - 3500 GENERATOR
		X	551-9969	HARNESS AS (GOV CONTROLS)	9	D-89	551-6460	WIRING GP (G3500 GOV)	3500A - 3500 GENERATOR
GB		X	551-9969	HARNESS AS (3500 (ENG INT AND HEATER - 800 FRAME)	10	C-171	551-3920	WIRING GP (3516 GEARBOX - FAN & HEATER PWR - 3500FR - EN INTFC PANEL)	3516 GEARBOX - 800 FRAME GENERATOR
			551-9969	HARNESS AS (3500 (ENG INT FAN AND HEATER - 3500 FRAME)			551-3920	WIRING GP (3516 GEARBOX - FAN & HEATER PWR - 3500FR - EN INTFC PANEL)	3516 GEARBOX - 3500 FRAME GENERATOR
			551-9969	HARNESS AS (3516 GEARBOX (ENG INT FAN AND HEATER - 3500 FRAME)			551-3920	WIRING GP (3516 GEARBOX - FAN & HEATER PWR - 3500FR - LN INTFC PANEL)	3516 GEARBOX - 3500 FRAME GENERATOR
GC		X	551-9969	HARNESS AS (3516A GOV)	9	K-83	551-1994	WIRING GP (3516A GOV)	3516A GOVERNOR HARNESS
		X	551-9969	HARNESS AS (GOV	9	D-82	551-3920	WIRING GP (G3500 GOV)	3500A - 3500 GENERATOR
GE		X	542-6466	HARNESS AS (GOV CONTROLS)	9	D-89	542-6466	WIRING GP (G3500 GOV)	3500A - 3500 GENERATOR
			542-6466	GOVERNOR CONTROLS	9	D-89	542-6466	WIRING GP (G3500 GOV)	3500A - 3500 GENERATOR
GF		X	551-9969	HARNESS AS (G3516A GOV)	9	K-75	551-1994	WIRING GP (3516A GOV)	3516A GOVERNOR HARNESS
GH		X	551-9969	HARNESS AS (ENGINE INTERFACE PKG MOUNT CONTROLS)	9	K-35	551-3920	WIRING GP (SPACE HTR - PKG MOUNTED CONTROLS)	3500 (C175-16 GAS GENERATOR PACKAGE MOUNTED CONTROL PANEL
GM		X	551-7568	GAS-MAIN TO ELM	9	C-4	551-5410	WIRING GP (GAS) NG INTFC INTERCONNECT	
GN		X	551-7568	3500B WIRE (PKG MOUNTED PANEL TO GND BAR)	9	C-4	551-5410	WIRING GP (PKG MOUNTED PANEL TO GND BAR)	PACKAGE MOUNTED CONTROL PANEL
	X	X	626-8159	ECL (ED) PANEL GROUND	9	A-9	626-2054	WIRING GP (PANEL GND	CONTROL PANEL TO GND BAR-ALL ON PKG CONTROL PANELS
GP		X	549-6303	HARNESS AS (G3516H 50HZ (M INTFC)	9	K-53	549-6300	WIRING GP (G3500H (NTFC) DIAGRAM 5406381	
GQ		X	549-6303		9	K-53	549-6300	WIRING GP	(GENERATOR) UTILITY
GR		X	551-9969	HARNESS AS (G3516H 50HZ (M INTFC)	9	K-53		DIAGRAM 5406381	
GS		X	551-9969	HARNESS AS (G3500H 50HZ (SM INTFC)	9	K-55		DIAGRAM 5406381	
GT		X	551-9969	HARNESS AS (G3500H 50HZ (20M INTFC)	9	K-55		DIAGRAM 5406381	
GU		X	551-9969	HARNESS AS (3500FR TERMINAL BOX MAIN)	9	C-48	460-5425	WIRING GP (3500 FR-TERM. BOX)	3500 FRAME GENERATOR
GV		X	551-9969		12	D-11			
GW		X	551-9969	DOOR-CAN	9	C-1	551-3660	DISPLAY GP	ON PANEL DOOR
GX		X	551-9969	NON DOOR HMI	9	C-1	551-3660	DISPLAY GP-LH	NON DOOR HMI OPTION MOUNTED ON LEFT-SIDE
					9	C-1	551-3660	DISPLAY GP-RH	NON DOOR HMI OPTION MOUNTED ON RIGHT-SIDE
					9	C-1	551-3660	DISPLAY GP-BB	NON DOOR HMI OPTION MOUNTED ON REAR SIDE
HM		X	567-9338	HARNESS AS (1M REMOT HMI)	12	D-101	567-1820	WIRING GP	
HP		X	461-7504	HARNESS AS (3500FR HIGH VOLT PT SECONDARY)	10	F-148	461-6554	WIRING GP (MV PT)	3500 FRAME GENERATOR
					10	F-150	461-6554	WIRING GP (HV PT)	3500 FRAME GENERATOR
HT		X	533-2737	HARNESS AS (3516 GEARBOX, HEATER INTERFACE)	10	K-171	551-5750	WIRING GP (3516 GEARBOX - FAN & HEATER PWR - PKG MOUNT CONTROLS)	3516 GEARBOX - 800 FRAME GENERATOR
					10	C-171	551-3920	WIRING GP (3516 GEARBOX - FAN & HEATER PWR - RH INTFC PANEL)	3516 GEARBOX - 3500 FRAME GENERATOR
							551-3920	WIRING GP (3516 GEARBOX - FAN & HEATER PWR - LH INTFC PANEL)	3516 GEARBOX - 3500 FRAME GENERATOR
HX		X	461-5748	3500FR HIGH VOLT PT SECONDARY COMMONS	9	C-159	461-6554	WIRING GP (HV PT)	3500 FRAME GENERATOR
J		X	491-3973	HARNESS AS (EMCP 4.4 PARALLELING JUMPER)			491-3900	PANEL GP - ELECTRONIC (EMCP 4.4)	MODULAR CONTROLS (MCP 4.4 PANEL (DIESEL)
							491-3900	PANEL GP - ELECTRONIC (EMCP 4.4 GAS)	MODULAR CONTROLS (MCP 4.4 PANEL (3500 GAS)
							579-9052	PANEL GP - ELEK (EMCP 4.4)	MODULAR CONTROLS (MCP 4.4 PANEL (COVR DIESEL)
JA		X	541-8453	HARNESS AS(G3500B (NTFC)	9	F-171	541-6454	WIRING GP (G3500B (NTFC) DIAGRAM-541-8452	
			496-1313	HARNESS AS (480V JACKET WATER HEATER)	10	D-179	496-1316	WIRING GP (JWH 480 V)	3512 (G3516) 3516) 3516) BRG, OR 1G3516) 1G32) 1G44) 1G46) 1G2 V 2 BRG
			496-1320	HARNESS AS (480V JACKET WATER HEATER)			496-1316	WIRING GP (JWH 480 V)	3516 (G3516) 3516) 3516) BRG
			496-1321	HARNESS AS (480V JACKET WATER HEATER)			496-1316	WIRING GP (JWH 480 V)	3516 (G3516) 3516) 3516) BRG
			496-1322	HARNESS AS (480V JACKET WATER HEATER)			496-1316	WIRING GP (JWH 480 V)	3516 (G3516) 3516) 3516) BRG
			496-1323	HARNESS AS (480V JACKET WATER HEATER)			496-1316	WIRING GP (JWH 480 V)	3516 (G3516) 3516) 3516) BRG
			496-1324	HARNESS AS (480V 3516 3500FR RH INTFC)			496-1316	WIRING GP (JWH 480V 3500FR JWH 480V RH INTERFACE PANEL)	3516 (G3516) 3516) 3516) BRG
			496-1325	HARNESS AS (480V 3516 3500FR LH INTFC)			496-1316	WIRING GP (JWH 480V 3500FR JWH 480V LH INTERFACE PANEL)	3516 (G3516) 3516) 3516) BRG
			496-8108	HARNESS AS (480V 3500FR JWH 480V)			496-1316	WIRING GP (JWH 480 V)	3516 (G3516) 3516) 3516) BRG
					10	C-171	496-1316	WIRING GP (CT(S-2) 3500FR JWH 480V RH INTERFACE PANEL)	C175-20 3500 FRAME GENERATOR
							496-1316	WIRING GP (CT(S-2) 3500FR JWH 480V LH INTERFACE PANEL)	C175-20 3500 FRAME GENERATOR
							496-1316	WIRING GP (CT(S-1) 3500FR JWH 480V RH INTERFACE PANEL)	C175-16 3500 FRAME GENERATOR
							496-1316	WIRING GP (CT(S-1) 3500FR JWH 480V LH INTERFACE PANEL)	C175-16 3500 FRAME GENERATOR
			528-6767	HARNESS AS (C175 3500FR JWH 480V)			496-1316	WIRING GP (CT(S-2) 3500FR JWH 480V RH INTERFACE PANEL)	C175-20 3500 FRAME GENERATOR
							496-1316	WIRING GP (CT(S-2) 3500FR JWH 480V LH INTERFACE PANEL)	C175-20 3500 FRAME GENERATOR
							496-1316	WIRING GP (CT(S-1) 3500FR JWH 480V LH INTERFACE PANEL)	C175-16 3500 FRAME GENERATOR
			551-8208	HARNESS AS (JWH 480 V RH 3500FR)			551-8208	WIRING GP (JWH 480V RH 3500 FRAME)	3516 (G3516) 3516) 3516) BRG
			551-8209	HARNESS AS (JWH 480 V LH 3500FR)			551-8209	WIRING GP (JWH 480V LH 3500 FRAME)	3516 (G3516) 3516) 3516) BRG
			551-8216	HARNESS AS (JWH 480 V (C)			551-8211	WIRING GP (JWH 480V (C)	3516 (G3516) 3516) 3516) BRG
			551-8212	HARNESS AS (JWH 480 V)			551-8211	WIRING GP (JWH 480V)	3516 (G3516) 3516) 3516) BRG
			551-8213	HARNESS AS (JWH 480 V (E)			551-8211	WIRING GP (JWH 480V (E)	3516 (G3516) 3516) 3516) BRG
			551-8214	HARNESS AS (JWH 480 V (F)			551-8211	WIRING GP (JWH 480V (F)	3516 (G3516) 3516) 3516) BRG
			551-8215	HARNESS AS (JWH 480 V (G)			551-8211	WIRING GP (JWH 480V (G)	3516 (G3516) 3516) 3516) BRG
			551-8217	HARNESS AS (JWH 480 V (H)			551-8211	WIRING GP (JWH 480V (H)	3516 (G3516) 3516) 3516) BRG
			551-8218	HARNESS AS (JWH 480 V (J)			551-8211	WIRING GP (JWH 480V (J)	3516 (G3516) 3516) 3516) BRG
			551-8219	HARNESS AS (JWH 480V (K)			551-8211	WIRING GP (JWH 480V (K)	3516 (G3516) 3516) 3516) BRG
			551-8220	HARNESS AS (JWH 480V (L)			551-8211	WIRING GP (JWH 480V (L)	3516 (G3516) 3516) 3516) BRG
			551-8221	HARNESS AS (JWH 480V (M)			551-8211	WIRING GP (JWH 480V (M)	3516 (G3516) 3516) 3516) BRG
			551-8222	HARNESS AS (JWH 480V (N)			551-8211	WIRING GP (JWH 480V (N)	3516 (G3516) 3516) 3516) BRG
			551-8223	HARNESS AS (JWH 480V (P)			551-8211	WIRING GP (JWH 480V (P)	3516 (G3516) 3516) 3516) BRG
			551-8224	HARNESS AS (JWH 480V (R)			551-8211	WIRING GP (JWH 480V (R)	3516 (G3516) 3516) 3516) BRG
			551-8225	HARNESS AS (JWH 480V (S)			551-8211	WIRING GP (JWH 480V (S)	3516 (G3516) 3516) 3516) BRG
			551-8226	HARNESS AS (JWH 480V (T)			551-8211	WIRING GP (JWH 480V (T)	3516 (G3516) 3516) 3516) BRG
			551-8227	HARNESS AS (JWH 480V (U)			551-8211	WIRING GP (JWH 480V (U)	3516 (G3516) 3516) 3516) BRG
			551-8228	HARNESS AS (JWH 480V (V)			551-8211	WIRING GP (JWH 480V (V)	3516 (G3516) 3516) 3516) BRG
			551-8229	HARNESS AS (JWH 480V (W)			551-8211	WIRING GP (JWH 480V (W)	3516 (G3516) 3516) 3516) BRG
			551-8230	HARNESS AS (JWH 480V (X)			551-8211	WIRING GP (JWH 480V (X)	3516 (G3516) 3516) 3516) BRG
			551-8231	HARNESS AS (JWH 480V (Y)			551-8211	WIRING GP (JWH 480V (Y)	3516 (G3516) 3516) 3516) BRG
			551-8232	HARNESS AS (JWH 480V (Z)			551-8211	WIRING GP (JWH 480V (Z)	3516 (G3516) 3516) 3516) BRG
			551-8233	HARNESS AS (JWH 480V (AA)			551-8211	WIRING GP (JWH 480V (AA)	3516 (G3516) 3516) 3516) BRG
			551-8234	HARNESS AS (JWH 480V (AB)			551-8211	WIRING GP (JWH 480V (AB)	3516 (G3516) 3516) 3516) BRG
			551-8235	HARNESS AS (JWH 480V (AC)			551-8211	WIRING GP (JWH 480V (AC)	3516 (G3516) 3516) 3516) BRG
			551-8236	HARNESS AS (JWH 480V (AD)			551-8211	WIRING GP (JWH 480V (AD)	3516 (G3516) 3516) 3516) BRG
			551-8237	HARNESS AS (JWH 480V (AE)			551-8211	WIRING GP (JWH 480V (AE)	3516 (G3516) 3516) 3516) BRG
			551-8238	HARNESS AS (JWH 480V (AF)			551-8211	WIRING GP (JWH 480V (AF)	3516 (G3516) 3516) 3516) BRG
			551-8239	HARNESS AS (JWH 480V (AG)			551-8211	WIRING GP (JWH 480V (AG)	3516 (G3516) 3516) 3516) BRG
			551-8240	HARNESS AS (JWH 480V (AH)			551-8211	WIRING GP (JWH 480V (AH)	3516 (G3516) 3516) 3516) BRG
			551-8241	HARNESS AS (JWH 480V (AJ)			551-8211	WIRING GP (JWH 480V (AJ)	3516 (G3516) 3516) 3516) BRG
			551-8242	HARNESS AS (JWH 480V (AK)			551-8211	WIRING GP (JWH 480V (AK)	3516 (G3516) 3516) 3516) BRG
			551-8243	HARNESS AS (JWH 480V (AL)			551-8211	WIRING GP (JWH 480V (AL)	3516 (G3516) 3516) 3516) BRG
			551-8244	HARNESS AS (JWH 480V (AM)			551-8211	WIRING GP (JWH 480V (AM)	3516 (G3516) 3516) 3516) BRG
			551-8245	HARNESS AS (JWH 480V (AN)			551-8211	WIRING GP (JWH 480V (AN)	3516 (G3516) 3516) 3516) BRG
			551-8246	HARNESS AS (JWH 480V (AP)			551-8211	WIRING GP (JWH 480V (AP)	3516 (G3516) 3516) 3516) BRG
			551-8247	HARNESS AS (JWH 480V (AR)			551-8211	WIRING GP (JWH 480V (AR)	3516 (G3516) 3516) 3516) BRG
			551-8248	HARNESS AS (JWH 480V (AS)			551-8211	WIRING GP (JWH 480V (AS)	3516 (G3516) 3516) 3516) BRG
			551-8249	HARNESS AS (JWH 480V (AT)			551-8211	WIRING GP (JWH 480V (AT)	3516 (G3516) 3516) 3516) BRG
			551-8250	HARNESS AS (JWH 480V (AU)			551-8211	WIRING GP (JWH 480V (AU)	3516 (G3516) 3516) 3516) BRG
			551-8251	HARNESS AS (JWH 480V (AV)			551-8211	WIRING GP (JWH 480V (AV)	3516 (G3516) 3516) 3516) BRG
			551-8252	HARNESS AS (JWH 480V (AW)			551-8211	WIRING GP (JWH 480V (AW)	3516 (G3516) 3516) 3516) BRG
			551-8253	HARNESS AS (JWH 480V (AX)			551-8211	WIRING GP (JWH 480V (AX)	3516 (G3516) 3516) 3516) BRG
			551-8254	HARNESS AS (JWH 480V (AY)			551-8211	WIRING GP (JWH 480V (AY)	3516 (G3516) 3516) 3516) BRG
			551-8255	HARNESS AS (JWH 480V (AZ)			551-8211	WIRING GP (JWH 480V (AZ)	3516 (G3516) 3516) 3516) BRG
			551-8256	HARNESS AS (JWH 480V (BA)			551-8211	WIRING GP (JWH 480V (BA)	3516 (G3516) 3516) 3516) BRG
			551-8257	HARNESS AS (JWH 480V (BB)			551-8211	WIRING GP (JWH 480V (BB)	3516 (G3516) 3516) 3516) BRG
			551-8258	HARNESS AS (JWH 480V (BC)			551-8211	WIRING GP (JWH 480V (BC)	3516 (G3516) 3516) 3516) BRG
			551-8259	HARNESS AS (JWH 480V (BD)			551-8211	WIRING GP (JWH 480V (BD)	3516 (G3516) 3516) 3516) BRG
			551-8260	HARNESS AS (JWH 480V (BE)			551-8211	WIRING GP (JWH 480V (BE)	3516 (G3516) 3516) 3516) BRG
			551-8261	HARNESS AS (JWH 480V (BF)			551-8211	WIRING GP (JWH 480V (BF)	3516 (G3516) 3516) 3516) BRG
			551-8262	HARNESS AS (JWH 480V (BG)			551-8211	WIRING GP (JWH 480V (BG)	3516 (G3516) 3516) 3516) BRG
			551-8263	HARNESS AS (JWH 480V (BH)			551-8211	WIRING GP (JWH 480V (BH)	3516 (G3516) 3516) 3516) BRG
			551-8264	HARNESS AS (JWH 480V (BJ)			551-8211	WIRING GP (JWH 480V (BJ)	3516 (G3516) 3516) 3516) BRG
			551-8265	HARNESS AS (JWH 480V (BK)			551-8211	WIRING GP (JWH 480V (BK)	3516 (G3516) 3516) 3516) BRG
			551-8266	HARNESS AS (JWH 480V (BL)			551-8211	WIRING GP (JWH 480V (BL)	3516 (G3516) 3516) 3516) BRG
			551-8267	HARNESS AS (JWH 480V (BM)			551-8211	WIRING GP (JWH 480V (BM)	3516 (G3516) 3516) 3516) BRG
			551-8268	HARNESS AS (JWH 480V (BN)			551-8211	WIRING GP (JWH 480V (BN)	3516 (G3516) 3516) 3516) BRG
			551-8269	HARNESS AS (JWH 480V (BP)			551-8211	WIRING GP (JWH 480V (BP)	3516 (G3516) 3516) 3516) BRG
			551-8270	HARNESS AS (JWH 480V (BR)			551-8211	WIRING GP (JWH 480V (BR)	3516 (G3516) 3516) 3516) BRG
			551-8271	HARNESS AS (JWH 480V (BS)			551-8211	WIRING GP (JWH 480V (BS)	3516 (G3516) 3516) 3516) BRG
			551-8272	HARNESS AS (JWH 480V (BT)			551-8211	WIRING GP (JWH 480V (BT)	3516 (G3516) 3516) 3516) BRG
			551-8273	HARNESS AS (JWH 480V (BU)			551-8211	WIRING GP (JWH 480V (BU)	3516 (G3516) 3516) 3516) BRG
			551-8274	HARNESS AS (JWH 480V (BV)			551-8211	WIRING GP (JWH 480V (BV)	3516 (G3516) 3516)

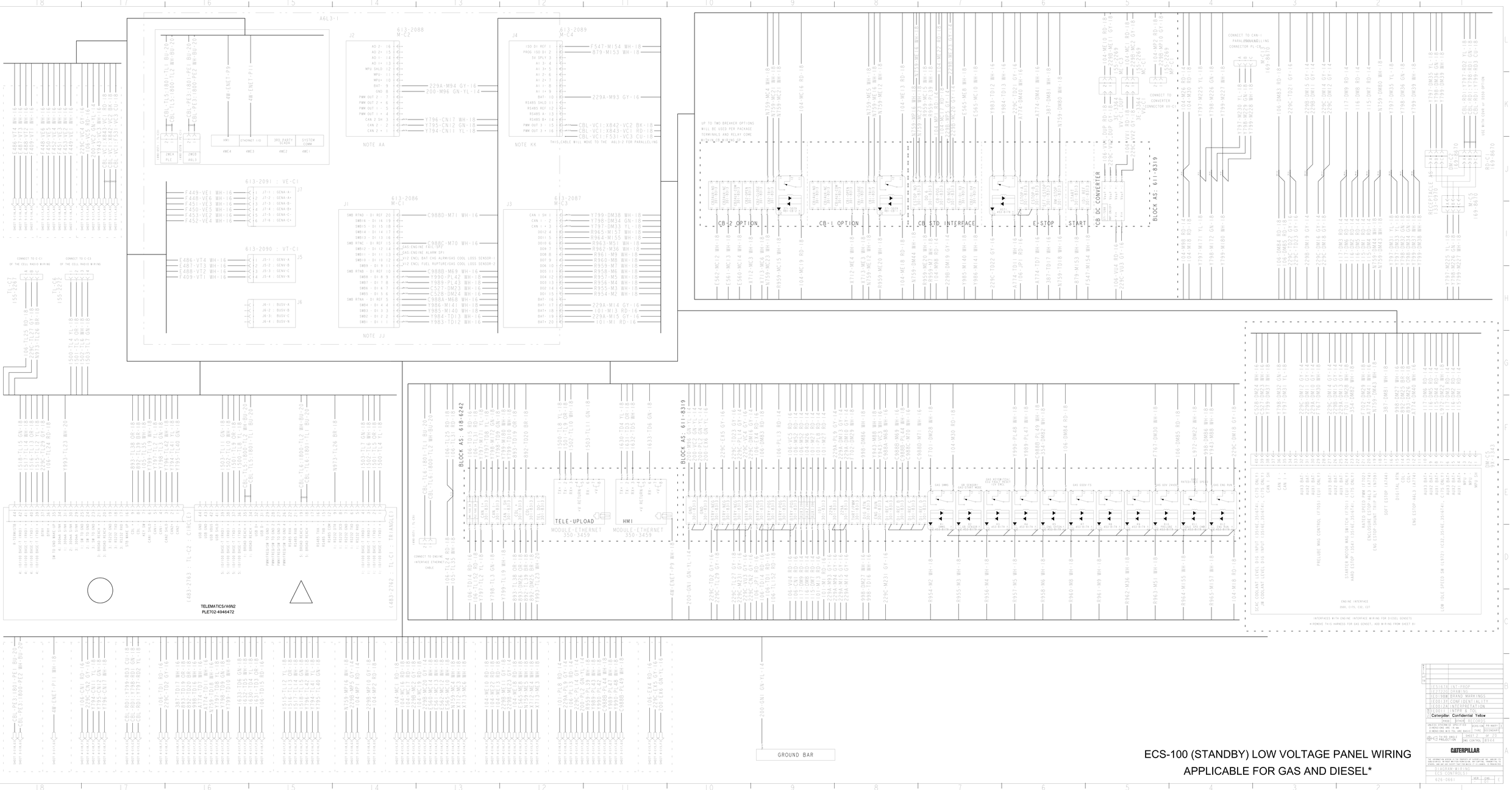
A6L3-1
613-2088 M-C2
613-2089 M-C4
613-2086 M-C1
613-2087 M-C3
613-2091 : VE-C1
613-2090 : VT-C1
NOTE AA
NOTE KK
NOTE JJ
CB-2 OPTION
CB-1 OPTION
CB STD INTERFACE
E-STOP
START
CB DC CONVERTER
BLOCK AS: 611-8319
BLOCK AS: 618-6242
TELE-UPLOAD
MODULE-ETHERNET 350-3459
HMI
TELEMATICS/A6N2
PLE702-4946472
GROUND BAR
ECS-100 (STANDBY) LOW VOLTAGE PANEL WIRING
APPLICABLE FOR GAS AND DIESEL*
CATERPILLAR

PARALLELING OPTION

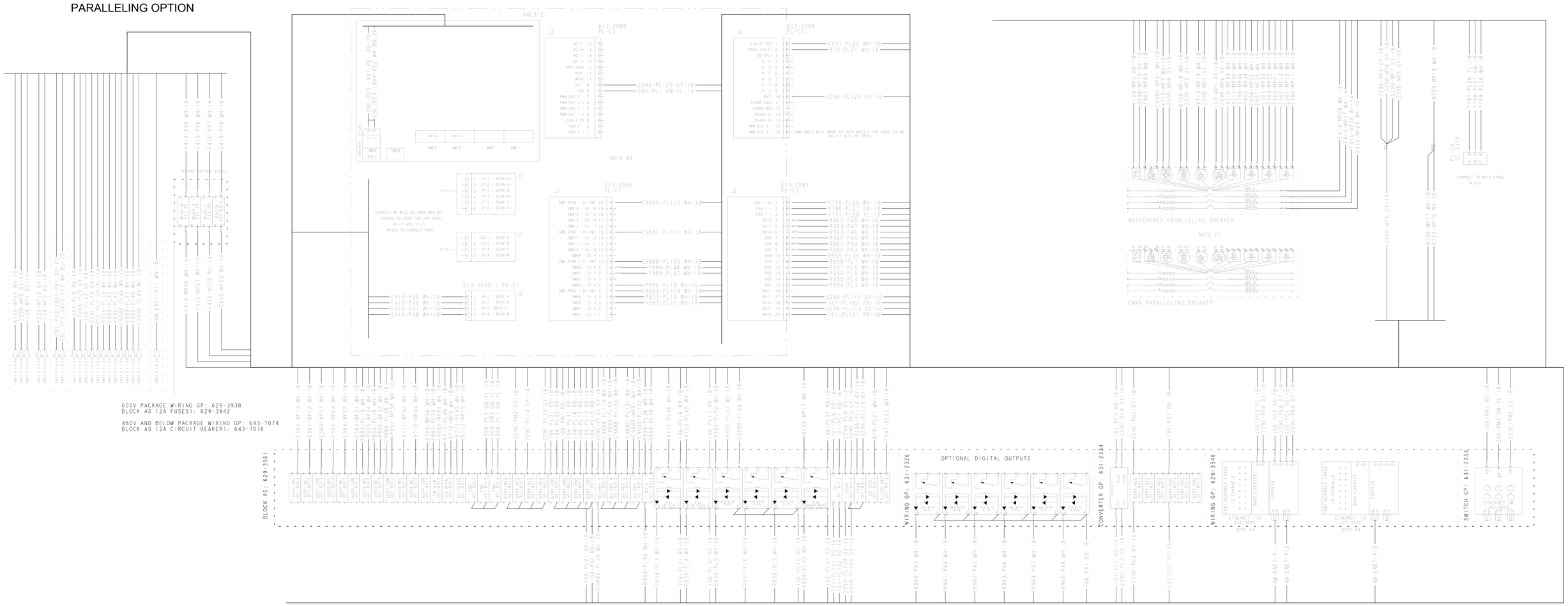

600V PACKAGE WIRING GP: 629-3938
BLOCK AS (2A FUSES): 629-3942

480V AND BELOW PACKAGE WIRING GP: 643-7074
BLOCK AS (2A CIRCUIT BREAKER): 643-7076

ECS-200 (PARALLELING) LOW VOLTAGE PANEL WIRING
APPLICABLE FOR GAS AND DIESEL

(S1678) INT-PROP
(C2220) DRAWING
(C1928) BRAND MARKINGS
(C0133) CONFIDENTIALITY
(C0124) INTERPRETATION

Caterpillar: Confidential Yellow

DRAWING DESCRIPTION
PARALLELING OPTIONS
DIMENSIONS ARE IN: MM (MM)
ECS-200 (PARALLELING) LOW VOLTAGE PANEL WIRING APPLICABLE FOR GAS AND DIESEL
TYPE: DIAGRAMS
SHEET 3 OF 20
PRODUCTION
ENG CONTROL 08944

CATERPILLAR

THE INFORMATION HEREIN IS THE PROPERTY OF CATERPILLAR INC. AND/OR ITS SUBSIDIARIES. IT MAY NOT BE USED, COPIED OR DISCLOSED WITHOUT WRITTEN CONSENT. SEE CAT-DISCLOSURE-LEVEL-1 FOR DETAILS.

DIAGRAM-WIRING
ECS CONTROLS

626-0661 | SIZE A | CAGE 0V1 | REV C

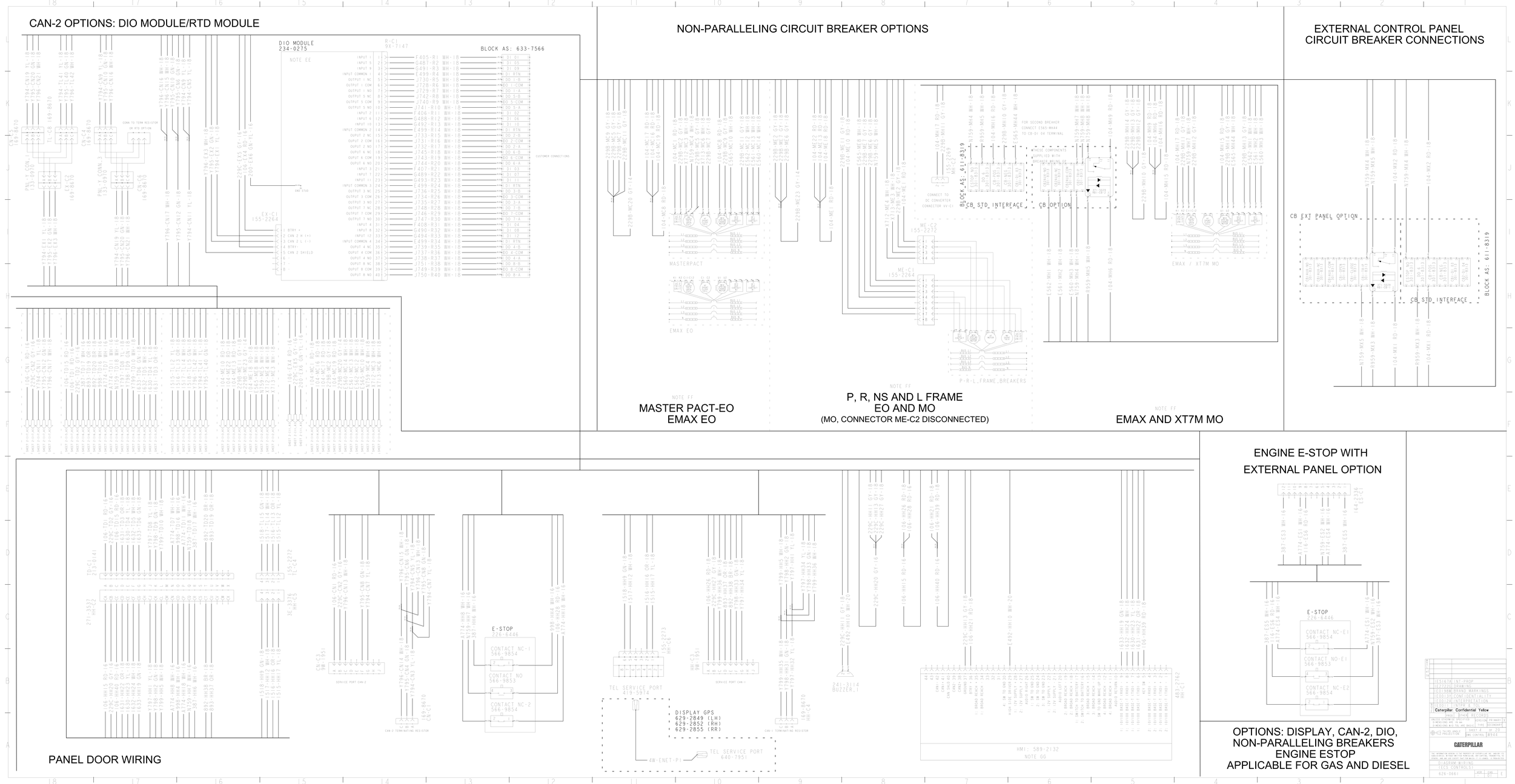
CAN-2 OPTIONS: DIO MODULE/RTD MODULE
DIO MODULE
234-0275
BLOCK AS: 633-7566
NON-PARALLELING CIRCUIT BREAKER OPTIONS
EXTERNAL CONTROL PANEL
CIRCUIT BREAKER CONNECTIONS
CB EXT PANEL OPTION
CB STD INTERFACE
CB OPTION
BLOCK AS: 611-8319
MASTERPACT
EMAX EO
EMAX / XT7M MO
MASTER PACT-EO
EMAX EO
P, R, NS AND L FRAME
EO AND MO
(MO, CONNECTOR ME-C2 DISCONNECTED)
EMAX AND XT7M MO
ENGINE E-STOP WITH
EXTERNAL PANEL OPTION
E-STOP
226-6446
CONTACT NC-E1
566-9854
CONTACT NO-E1
566-9853
CONTACT NC-E2
566-9854
PANEL DOOR WIRING
TEL SERVICE PORT
419-5914
DISPLAY GPS
629-2849 (LH)
629-2852 (RH)
629-2855 (RR)
TEL SERVICE PORT
640-7951
HMI: 589-2132
OPTIONS: DISPLAY, CAN-2, DIO,
NON-PARALLELING BREAKERS
ENGINE ESTOP
APPLICABLE FOR GAS AND DIESEL
Caterpillar: Confidential Yellow
CATERPILLAR
DIAGRAM-WIRING
TECS CONTROLS
626-0661

LOW VOLTAGE IVR OPTION

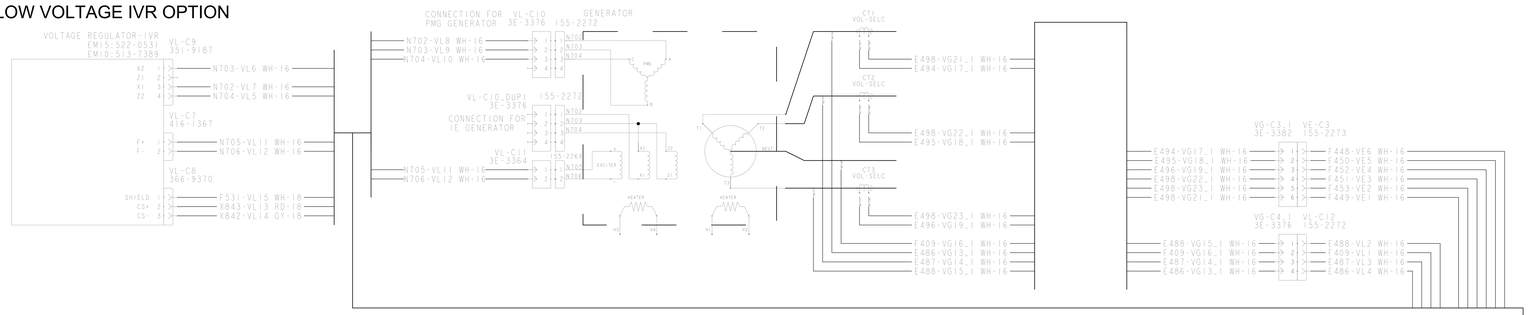

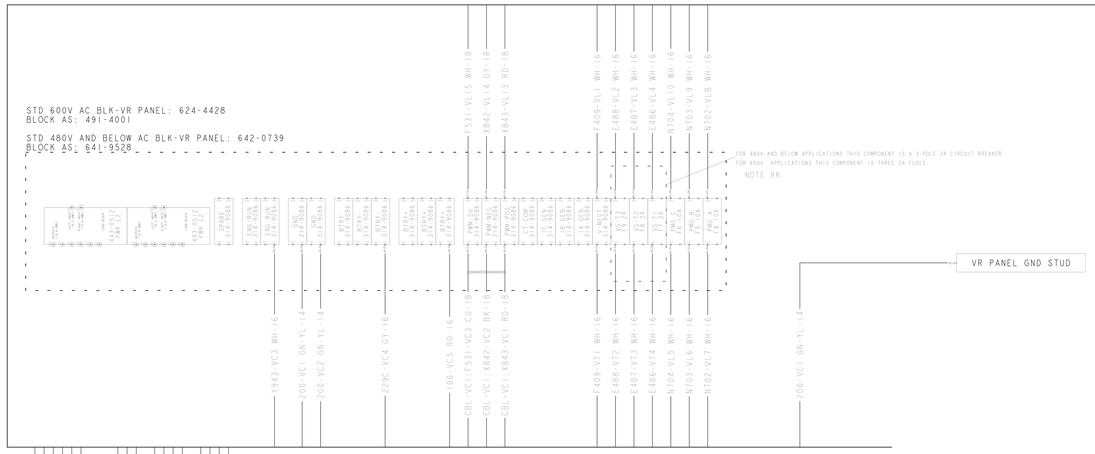

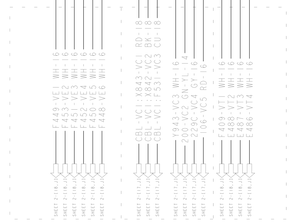

LOW VOLTAGE IVR REGULATOR, VOLTAGE AND CURRENT SENSING OPTIONS
APPLICABLE FOR GAS AND DIESEL

[E3187A] INT-PROP	
[E2272G] DRAWING	
[E0139B] DRAWI MARKINGS	
[E0013X] CONFIDENTIALITY	
[E0012A] INTERPRETATION	
CONFIDENTIALITY	
Caterpillar Confidential Yellow	
DRAWING DESCRIPTION	
WIRING-DIAGRAM-IVR SPLITTER	SCRIBE PRIMARY 3
DIMENSIONS ARE IN: MM INCHES	TYPE DECORAT
FRONT ANGLE PROJECTION	SHEET 5 OF 20
	ENG CONTROL E8944

CATERPILLAR

THE INFORMATION HEREON IS THE PROPERTY OF CATERPILLAR INC. AND/OR ITS SUBSIDIARIES. IT IS SUBMITTED IN CONFIDENCE AND MUST NOT BE DISCLOSED, REPRODUCED OR USED FOR ANYTHING OTHER THAN THAT FOR WHICH IT IS LOANED. TO OBTAIN ADDITIONAL COPIES CONTACT THE OWNER OF THIS DOCUMENT.

WIRING-DIAGRAM
(ECS CONTROLS)

626-0661 | SIZE A | CAGE 01 | REV C

LOW VOLTAGE CDVR OPTION

(F/D/W 5500 LV MARATHON GEN ALSO)

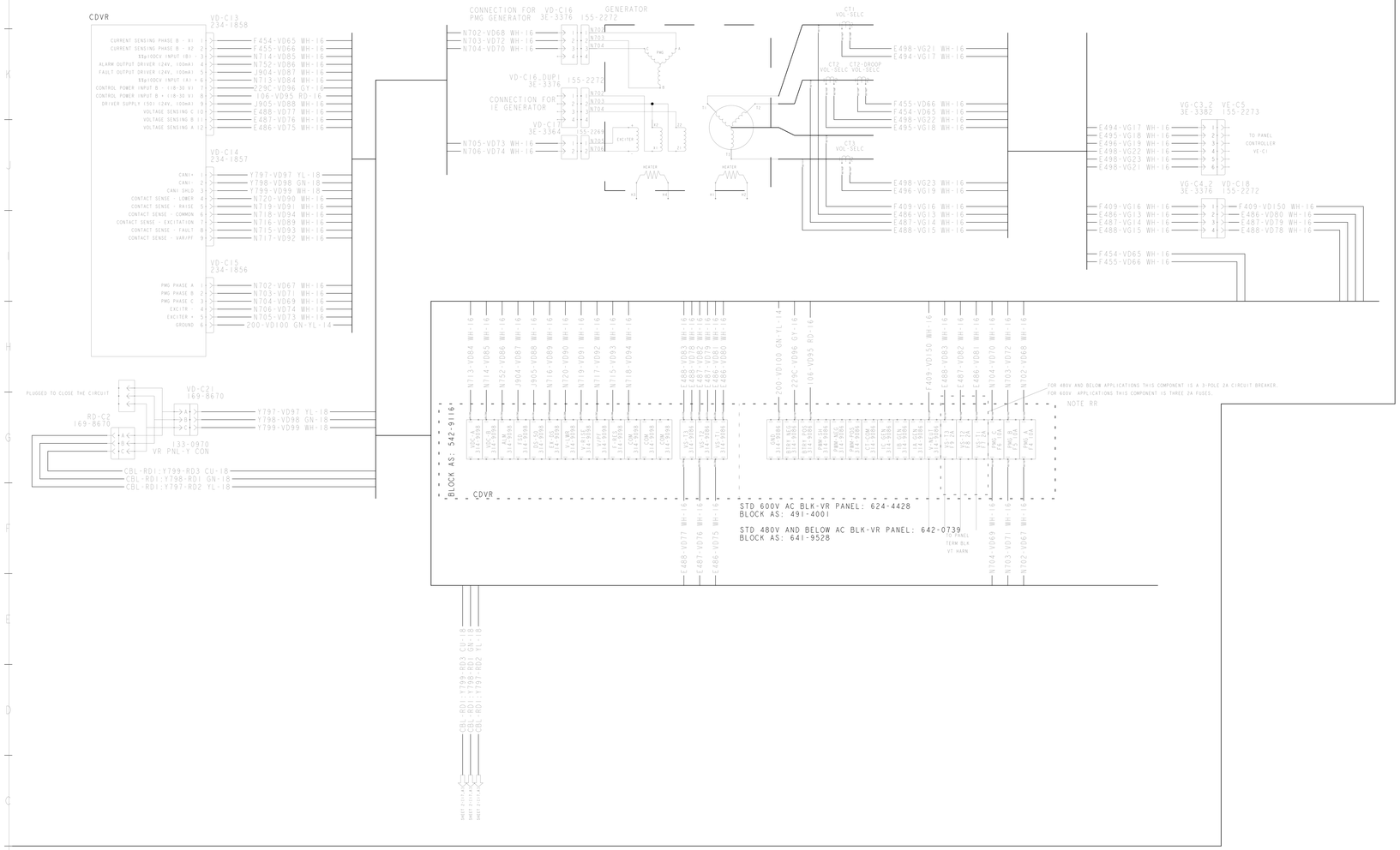

LOW VOLTAGE CDVR REGULATOR, VOLTAGE AND CURRENT SENSING OPTIONS
APPLICABLE FOR GAS AND DIESEL

(E3107A) INT-PROP	
(E2720) DRAW/NO	
(E0120B) DRAWI MARKINGS	
(E0013A) CONFIDENTIALITY	
(E0012A) INTERPRETATION	
Caterpillar: Confidential Yellow	
DIMENSIONS ARE IN MILLIMETERS UNLESS OTHERWISE SPECIFIED	SCRIBE PRIMARY A
	TYPE SECONDARY
FIRST ANGLE PROJECTION	SHEET 6 OF 20
	ENG CONTROL E8944

CATERPILLAR

THE INFORMATION HEREIN IS THE PROPERTY OF CATERPILLAR INC. AND/OR ITS SUBSIDIARIES. IT MAY NOT BE USED FOR ANY PURPOSE NOT SPECIFICALLY GRANTED IN WRITING BY CATERPILLAR INC. IT CANNOT BE REPRODUCED.

DIAGRAM-WIRING
(ECS CONTROLS)

626-0661 | SIZE D | CAGE 21 | REV C

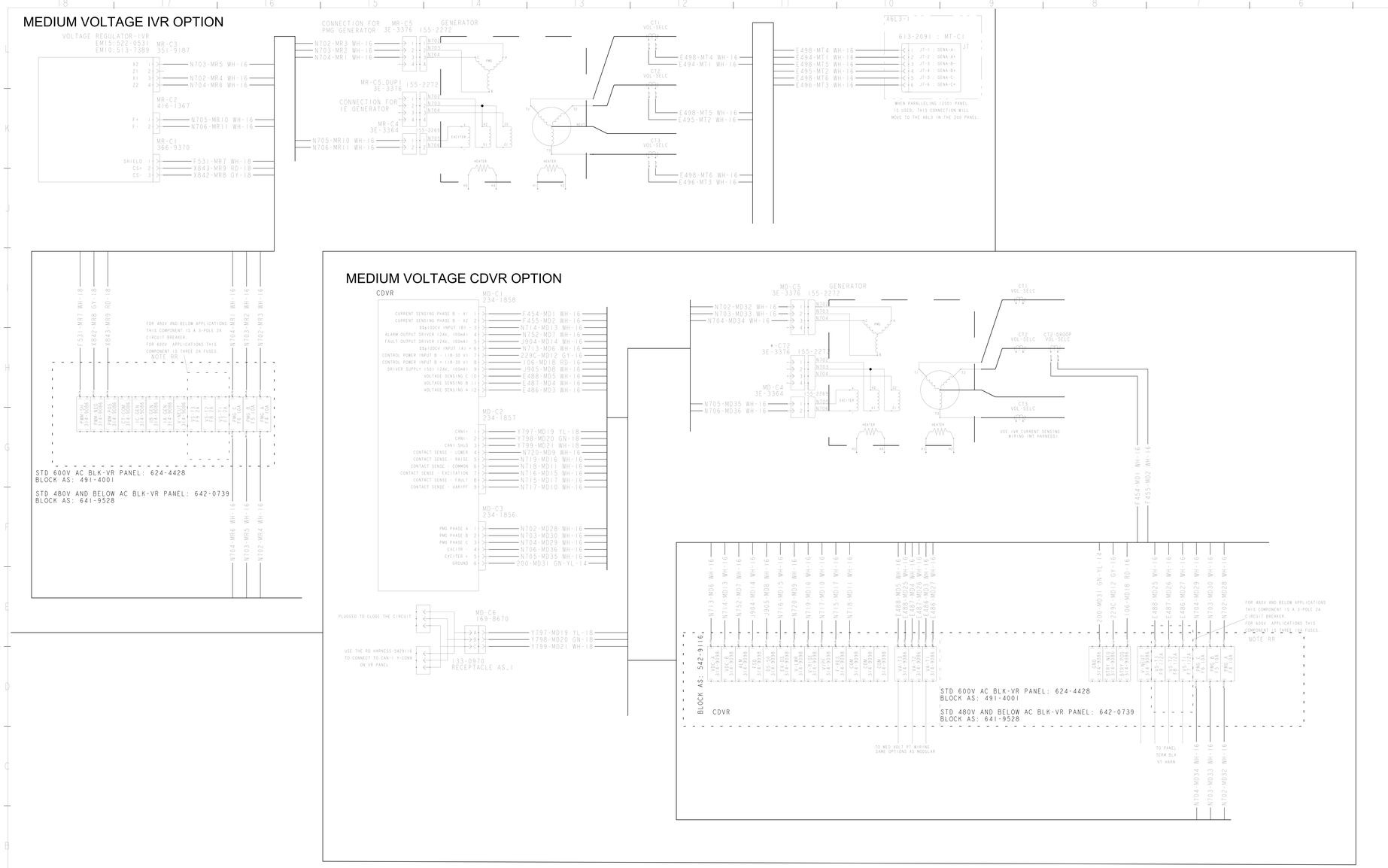

MEDIUM VOLTAGE REGULATOR, VOLTAGE AND CURRENT SENSING OPTIONS
APPLICABLE FOR GAS AND DIESEL

(3167A) INT-PROP
(2220) DRAWING
(0139B) DRAWING MARKINGS
(0013A) CONFIDENTIALITY
(0012A) INTERPRETATION

Caterpillar Confidential Yellow

DIMENSIONS ARE IN MM UNLESS OTHERWISE SPECIFIED
DIMENSIONS ARE TO BE ANSI Y14.5M-1982
SCALE: NONE
TYPE: DIAGRAMS
SHEET 7 OF 20
PAGE SIZE: A
PRODUCTION
ENG CONTROL 08944

CATERPILLAR

THE INFORMATION HEREON IS THE PROPERTY OF CATERPILLAR INC. AND/OR ITS SUBSIDIARIES. IT IS SUBMITTED IN CONFIDENCE AND MUST NOT BE REPRODUCED, USED, OR DISCLOSED EXCEPT THE WORK IT IS LOANED TO WHEN ASKED.

DIAGRAM-WIRING
TECS-CONTROLS

626-0661

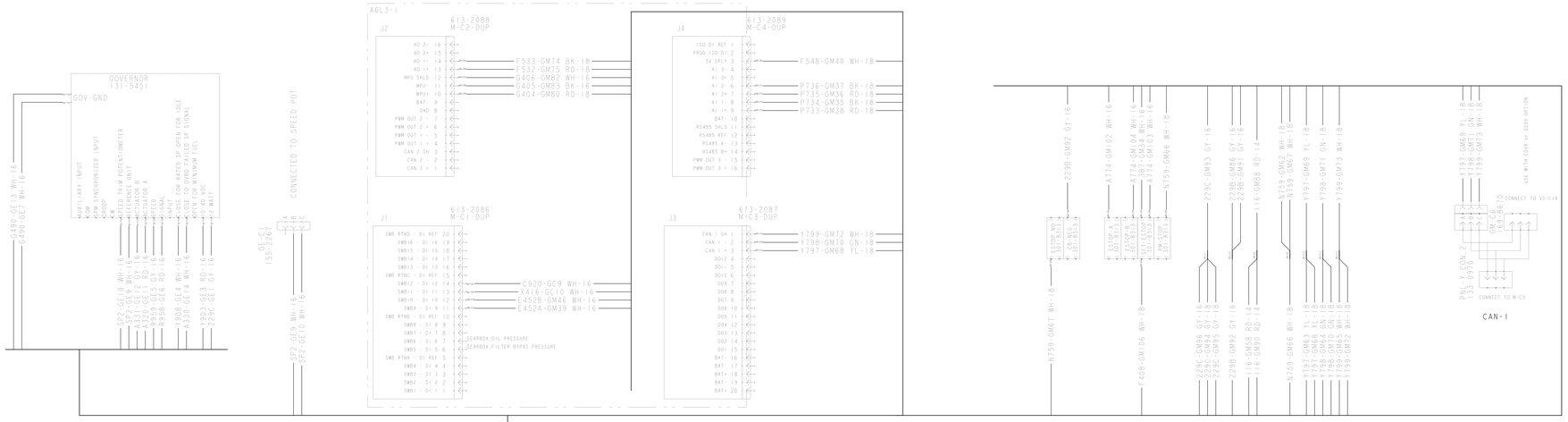

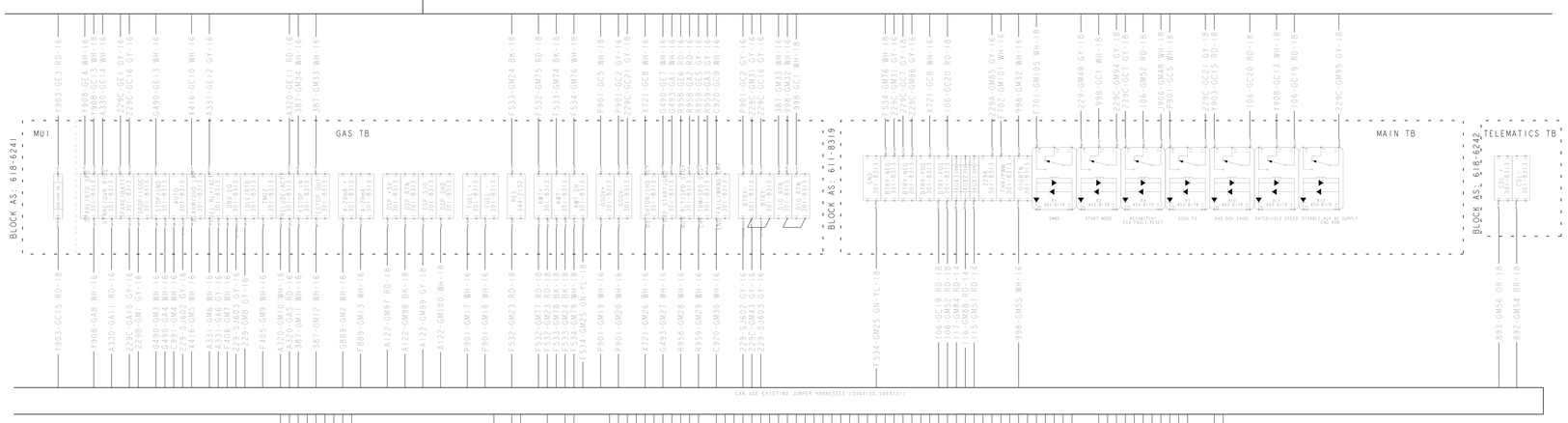

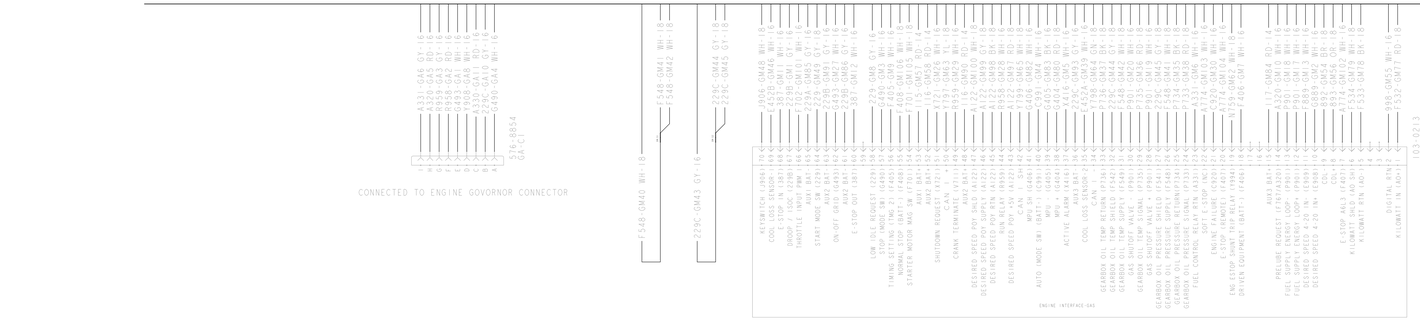

GAS WIRING OPTION

Caterpillar: Confidential Yellow

CATERPILLAR

DIAGRAM-WIRING
ECS-CONTROLS
626-0661

PLACE HOLDER SHEET FOR FUTURE DESIGN

REFERENCE THE CURRENT MODULAR DESIGN-DIAGRAM

GRID CODE SPECIFIC WIRING

REV	
REV	
REV	

PLACE HOLDER SHEET FOR FUTURE DESIGN

REFERENCE THE CURRENT MODULAR DESIGN-DIAGRAM

DIESEL MUI WIRING OPTION

[E3107A] INT-PROP	
[E2720] DRAW/NO	
[E0120B] DRAWI MARKINGS	
[E0013X] CONFIDENTIALITY	
[E0012A] INTERPRETATION	
[E0010A] DATA CLASS	Caterpillar Confidential Yellow
DRAWING TITLE	DIESEL MUI WIRING
ENGINEER/PROJECT LEADER	SCRIVONE FRANKIE
DIMENSIONS ARE IN: MM (MM) (INCH)	TYPE: DIAGRAMS
THIRD ANGLE PROJECTION	SHEET 10 OF 20
	ENG CONTROL E8944

CATERPILLAR

THE INFORMATION HEREIN IS THE PROPERTY OF CATERPILLAR INC. AND/OR ITS SUBSIDIARIES. IT MAY NOT BE USED FOR ANY PURPOSE NOT SPECIFICALLY GRANTED IN WRITING BY CATERPILLAR INC. OR ITS SUBSIDIARIES.

DIAGRAM-WIRING
(ECS CONTROLS)

626-0661 | SIZE D | CAGE CODE 21 | REV E

ECS-100

DESCRIPTION	RELAY	3500 EUI	C175-16/C175-20	C27 & C32	G3500
		A6L3-SINGLE GEN (1)	A6L3-SINGLE GEN (1)	A6L3-SINGLE GEN (1)	A6L3-SINGLE GEN (1)
PROG ISO DI		START (DEDICATED)	START (DEDICATED)	START (DEDICATED)	START (DEDICATED)
PROG DI-1	RST1	ESTOP-NC	ESTOP-NC	ESTOP-NC	ESTOP-NC
PROG DI-2	RST1	ESTOP-NO	ESTOP-NO	ESTOP-NO	ESTOP-NO
PROG DI-3		#1 CB OPEN WARNING	#1 CB OPEN WARNING	#1 CB OPEN WARNING	#1 CB OPEN WARNING
PROG DI-4		#2 CB OPEN WARNING	#2 CB OPEN WARNING	#2 CB OPEN WARNING	#2 CB OPEN WARNING
PROG DI-5		GEARBOX OIL PRESSURE	JW COOLANT LEVER	SPARE	GEARBOX OIL PRESSURE
PROG DI-6		GEARBOX FILTER BYPASS PRESSURE	SCAC LEVEL	SPARE	GEARBOX FILTER BYPASS PRESSURE
PROG DI-7		SAFETY SHUTDOWN INPUT-NO	SAFETY SHUTDOWN INPUT-NO	SAFETY SHUTDOWN INPUT-NO	SAFETY SHUTDOWN INPUT-NO
PROG DI-8		SAFETY SHUTDOWN INPUT-NC	SAFETY SHUTDOWN INPUT-NC	SAFETY SHUTDOWN INPUT-NC	SAFETY SHUTDOWN INPUT-NC
PROG DI-9		SPARE	SPARE	FUEL RUPTURE (ENCLOSURE)	COOLAND LOSS SENSOR-1
PROG DI-10		DIFFERENTIAL AIR FILTER	SPARE	BATTERY CHARGE ALARM (ENCLOSURE)	COOLAND LOSS SENSOR-2
PROG DI-11		SPARE	SPARE	SPARE	ENGINE ALARM
PROG DI-12		SPARE	SPARE	SPARE	ENGINE FAIL
PROG DI-13		SPARE	SPARE	SPARE	SPARE
PROG DI-14		SPARE	SPARE	SPARE	SPARE
PROG DI-15		SPARE	SPARE	SPARE	SPARE
PROG DI-16		SPARE	SPARE	SPARE	SPARE
DO-1	R1	STARTER MOTOR MAG RELAY	SPARE	SPARE	STARTER MOTOR MAG RELAY
DO-2	R2	GEARBOX PLC	SPARE	SPARE	START (FUEL ENABLE)
DO-3	R3	SPARE	SPARE	DISABLE AUX AC SUPPLY (ENCLOSURE)	KEYSWITCH-ECU FAULT RESET
DO-4	R4	SPARE	SPARE	SPARE	SPARE
DO-5 DEDICATED	R5	FUNCTIONAL SAFETY-HARD ESTOP	FUNCTIONAL SAFETY-HARD ESTOP	FUNCTIONAL SAFETY-HARD ESTOP	FUNCTIONAL SAFETY-HARD ESTOP
DO-6 DEDICATED	RB1-CB	COMMON SHUT DOWN (SHUNT TRIP)	COMMON SHUT DOWN (SHUNT TRIP)	COMMON SHUT DOWN (SHUNT TRIP)	COMMON SHUT DOWN (SHUNT TRIP)
DO-7 DEDICATED	R7	FUNCTIONAL SAFETY-GSOV	FUNCTIONAL SAFETY-GSOV	FUNCTIONAL SAFETY-GSOV	FUNCTIONAL SAFETY-GSOV
DO-8	R8	SPARE	SPARE	SPARE	SPARE
DO-9	R9	SPARE	SPARE	SPARE	SPARE
DO-10	R10	START AID (ENGINE PRELUBE)	SPARE	SPARE	SPARE
DO-11	R11	SPARE	IDLE SPEED COMMAND	IDLE SPEED COMMAND	RATED/ IDLESPEED
DO-12	R12	DISABLE AUX AC SUPPLY	DISABLE AUX AC SUPPLY	DISABLE AUX AC SUPPLY	DISABLE AUX AC SUPPLY
ANALOG INPUT-1		GEAR OIL TEMPERATURE (GEARBOX)	SPARE	SPARE	GEAR OIL TEMPERATURE (GEARBOX)
ANALOG INPUT-2		SPARE	SPARE	SPARE	SPARE
ANALOG INPUT-3		SPARE	SPARE	FUEL LEVEL (ENCLOSURE)	SPARE
ANALOG OUTPUT-1		SPARE	SPARE	SPARE	KILOWATT TRANSDUCER
ANALOG OUTPUT-2		SPARE	SPARE	SPARE	SPARE
PWM OUTPUT-1		SPARE	SPARE	SPARE	SPARE
PWM OUTPUT-2		SPARE	SPARE	SPARE	SPARE
PWM OUTPUT-3		IVR VOLTAGE CONTROL	IVR VOLTAGE CONTROL	IVR VOLTAGE CONTROL	IVR VOLTAGE CONTROL
MPU INPUT		SPARE	SPARE	SPARE	MAG PICKUP-SPEED SENSOR

ETHERNET I/O

NOTE HR

PRELOADED MODULE CONFIGURATIONS

ETHERNET I/O	DIGITAL INPUT	DIGITAL OUTPUT	ANALOG INPUT	ANALOG OUTPUT	RTD
MODULE PN	16 PER CARD	16 PER CARD	4 PER CARD	4 PER CARD	4 PER CARD
622-9250 (GENSET CONF-A)	1X	1X	0	0	0
622-9251 (GENSET CONF-B)	1X	1X	1X	1X	1X
622-9252 (GENSET CONF-C)	2X	2X	1X	1X	0
622-9253 (GENSET CONF-D)	1X	1X	2X	2X	0
622-9244 (PARALLELING CONF-A)	1X	1X	0	0	0
622-9245 (PARALLELING CONF-B)	1X	1X	1X	1X	1X
622-9246 (PARALLELING CONF-C)	2X	2X	1X	1X	0
622-9248 (PARALLELING CONF-D)	1X	1X	2X	2X	0
622-9233 (GRID CODE)	2X	1X	2X	1X	0

ECS-200

DESCRIPTION	RELAY	3500 EUI	RELAY_1	3500 EUI_1	RELAY_2	C175-16/C175-20	RELAY_3	C175-16/C175-20_1	RELAY_4	C27 & C32	RELAY_5	C27 & C32_1	RELAY_6	G3500	RELAY_7	G3500_1
		A6L3-GENSET (1)		A6L3-PARALLELING (2)		A6L3-GENSET (1)		A6L3-PARALLELING (2)		A6L3-GENSET (1)		A6L3-PARALLELING (2)		A6L3-GENSET (1)		A6L3-PARALLELING (2)
PROG ISO DI		START (DEDICATED)		GROUP START		START (DEDICATED)		GROUP START		START (DEDICATED)		GROUP START		START (DEDICATED)		GROUP START
PROG DI-1	RST1	ESTOP-NC		SPARE	RST1	ESTOP-NC		SPARE	RST1	ESTOP-NC		SPARE	RST1	ESTOP-NC		SPARE
PROG DI-2	RST1	ESTOP-NO		SPARE	RST1	ESTOP-NO		SPARE	RST1	ESTOP-NO		SPARE	RST1	ESTOP-NO		SPARE
PROG DI-3		#1 CB OPEN WARNING		CIRCUIT BREAKER ALARM		#1 CB OPEN WARNING		CIRCUIT BREAKER ALARM		#1 CB OPEN WARNING		CIRCUIT BREAKER ALARM		#1 CB OPEN WARNING		CIRCUIT BREAKER ALARM
PROG DI-4		#2 CB OPEN WARNING		CIRCUIT BREAKER AUX3-NO		#2 CB OPEN WARNING		CIRCUIT BREAKER AUX3-NO		#2 CB OPEN WARNING		CIRCUIT BREAKER AUX3-NO		#2 CB OPEN WARNING		CIRCUIT BREAKER AUX3-NO
PROG DI-5		GEARBOX OIL PRESSURE		CIRCUIT BREAKER AUX3-NC		JW COOLANT LEVER		CIRCUIT BREAKER AUX3-NC		SPARE		CIRCUIT BREAKER AUX3-NC		GEARBOX OIL PRESSURE		CIRCUIT BREAKER AUX3-NC
PROG DI-6		GEARBOX FILTER BYPASS PRESSURE		SPARE		SCAC LEVEL		SPARE		SPARE		SPARE		GEARBOX FILTER BYPASS PRESSURE		SPARE
PROG DI-7	R-P3	SAFETY SHUTDOWN INPUT-NO	R-P3	SAFETY SHUTDOWN INPUT-NO	R-P3	SAFETY SHUTDOWN INPUT-NO	R-P3	SAFETY SHUTDOWN INPUT-NO	R-P3	SAFETY SHUTDOWN INPUT-NO	R-P3	SAFETY SHUTDOWN INPUT-NO	R-P3	SAFETY SHUTDOWN INPUT-NO		SAFETY SHUTDOWN INPUT-NO
PROG DI-8	R-P3	SAFETY SHUTDOWN INPUT-NC	R-P3	SAFETY SHUTDOWN INPUT-NC	R-P3	SAFETY SHUTDOWN INPUT-NC	R-P3	SAFETY SHUTDOWN INPUT-NC	R-P3	SAFETY SHUTDOWN INPUT-NC	R-P3	SAFETY SHUTDOWN INPUT-NC	R-P3	SAFETY SHUTDOWN INPUT-NC		SAFETY SHUTDOWN INPUT-NC
PROG DI-9		SPARE		SPARE		SPARE		SPARE		FUEL RUPTURE (ENCLOSURE)		SPARE		COOLAND LOSS SENSOR-1		SPARE
PROG DI-10		DIFFERENTIAL AIR FILTER		SPARE		SPARE		SPARE		BATTERY CHARGE ALARM (ENCLOSURE)		SPARE		COOLAND LOSS SENSOR-2		SPARE
PROG DI-11		SPARE		SPARE		SPARE		SPARE		SPARE		SPARE		ENGINE ALARM		SPARE
PROG DI-12		SPARE		SPARE		SPARE		SPARE		SPARE		SPARE		ENGINE FAIL		SPARE
PROG DI-13		SPARE		SPARE		SPARE		SPARE		SPARE		SPARE		SPARE		SPARE
PROG DI-14		SPARE		SPARE		SPARE		SPARE		SPARE		SPARE		SPARE		SPARE
PROG DI-15		SPARE		SPARE		SPARE		SPARE		SPARE		SPARE		SPARE		SPARE
PROG DI-16		SPARE		SPARE		SPARE		SPARE		SPARE		SPARE		SPARE		SPARE
DO-1	R1	STARTER MOTOR MAG RELAY	R-P1	CIRCUIT BREAKER OPEN	R1	SPARE	R-P1	CIRCUIT BREAKER OPEN	R1	SPARE	R-P1	CIRCUIT BREAKER OPEN	R1	STARTER MOTOR MAG RELAY	R-P1	SPARE
DO-2	R2	GEARBOX PLC	R-P2	CIRCUIT BREAKER CLOSE	R2	SPARE	R-P2	CIRCUIT BREAKER CLOSE	R2	SPARE	R-P2	CIRCUIT BREAKER CLOSE	R2	START (FUEL ENABLE)	R-P2	SPARE
DO-3	R3	SPARE	R-P3	SAFETY SHUTDOWN	R3	SPARE	R-P3	SAFETY SHUTDOWN	R3	DISABLE AUX AC SUPPLY (ENCLOSURE)	R-P3	SAFETY SHUTDOWN	R3	KEYSWITCH-ECU FAULT RESET	R-P3	SPARE
DO-4	R4	SPARE	R-P4	SPARE	R4	SPARE	R-P4	SPARE	R4	SPARE	R-P4	SPARE	R4	SPARE	R-P4	SPARE
DO-5 DEDICATED	R5	FUNCTIONAL SAFETY-HARD ESTOP	R-P5	SPARE	R5	FUNCTIONAL SAFETY-HARD ESTOP	R-P5	SPARE	R5	FUNCTIONAL SAFETY-HARD ESTOP	R-P5	SPARE	R5	FUNCTIONAL SAFETY-HARD ESTOP	R-P5	SPARE
DO-6 DEDICATED	RB1-CB	COMMON SHUT DOWN (SHUNT TRIP)	R-P6	COMMON SHUT DOWN (SHUNT TRIP)	RB1-CB	COMMON SHUT DOWN (SHUNT TRIP)	R-P6	COMMON SHUT DOWN (SHUNT TRIP)	RB1-CB	COMMON SHUT DOWN (SHUNT TRIP)	R-P6	COMMON SHUT DOWN (SHUNT TRIP)	RB1-CB	COMMON SHUT DOWN (SHUNT TRIP)	R-P6	COMMON SHUT DOWN (SHUNT TRIP)
DO-7 DEDICATED	R7	FUNCTIONAL SAFETY-GSOV	R-P7	SPARE	R7	FUNCTIONAL SAFETY-GSOV	R-P7	SPARE	R7	FUNCTIONAL SAFETY-GSOV	R-P7	SPARE	R7	FUNCTIONAL SAFETY-GSOV	R-P7	SPARE
DO-8	R8	SPARE	R-P8	SPARE	R8	SPARE	R-P8	SPARE	R8	SPARE	R-P8	SPARE	R8	SPARE	R-P8	SPARE
DO-9	R9	SPARE	R-P9	SPARE	R9	SPARE	R-P9	SPARE	R9	SPARE	R-P9	SPARE	R9	SPARE	R-P9	SPARE
DO-10	R10	START AID (ENGINE PRELUBE)	R-P10	SPARE	R10	SPARE	R-P10	SPARE	R10	SPARE	R-P10	SPARE	R10	SPARE	R-P10	SPARE
DO-11	R11	SPARE	R-P11	SPARE	R11	IDLE SPEED COMMAND	R-P11	SPARE	R11	IDLE SPEED COMMAND	R-P11	SPARE	R11	RATED/ IDLESPEED	R-P11	SPARE
DO-12	R12	DISABLE AUX AC SUPPLY	R-P12	SPARE	R12	DISABLE AUX AC SUPPLY	R-P12	SPARE	R12	DISABLE AUX AC SUPPLY	R-P12	SPARE	R12	DISABLE AUX AC SUPPLY	R-P12	SPARE
ANALOG INPUT-1		GEAR OIL TEMPERATURE (GEARBOX)		SPARE		SPARE		SPARE		SPARE		SPARE		GEAR OIL TEMPERATURE (GEARBOX)		SPARE
ANALOG INPUT-2		SPARE		SPARE		SPARE		SPARE		SPARE		SPARE		SPARE		SPARE
ANALOG INPUT-3		SPARE		SPARE		SPARE		SPARE		FUEL LEVEL (ENCLOSURE)		SPARE		SPARE		SPARE
ANALOG OUTPUT-1		SPARE		SPARE		SPARE		SPARE		SPARE		SPARE		KILOWATT TRANSDUCER		SPARE
ANALOG OUTPUT-2		SPARE		SPARE		SPARE		SPARE		SPARE		SPARE		SPARE		SPARE
PWM OUTPUT-1		SPARE		SPARE		SPARE		SPARE		SPARE		SPARE		SPARE		SPARE
PWM OUTPUT-2		SPARE		SPARE		SPARE		SPARE		SPARE		SPARE		SPARE		SPARE
PWM OUTPUT-3		SPARE		IVR VOLTAGE CONTROL		SPARE		IVR VOLTAGE CONTROL		SPARE		IVR VOLTAGE CONTROL		SPARE		IVR VOLTAGE CONTROL
MPU INPUT		SPARE		SPARE		SPARE		SPARE		SPARE		SPARE		MAG PICKUP-SPEED SENSOR		SPARE

INPUT & OUTPUT CHART

(E3187A) INT-PROP
(E2720) DRAWING
(E0198) BRAND MARKINGS
(E0133) CONFIDENTIALITY
(E0012A) INTERPRETATION
Caterpillar: Confidential Yellow

DIMENSIONS ARE IN: MM [INCH]
UNLESS OTHERWISE SPECIFIED
DIMENSIONS ARE IN: MM [INCH]

SCALE: [NONE] PRIMARY: [1]
TYPE: SECONDARY
SHEET 11 OF 20
ENG CONTROL E8944

FOR USE ONLY IN PRODUCTION

CATERPILLAR

THE INFORMATION HEREIN IS THE PROPERTY OF CATERPILLAR INC. AND/OR ITS SUBSIDIARIES AND MAY BE USED ONLY IN ACCORDANCE WITH THE LICENSE AGREEMENT. DO NOT COPY, DISTRIBUTE OR DISCLOSE WITHOUT PERMISSION. IT IS UNLAWFUL TO VIOLATE THIS NOTICE.

DIAGRAM-WIRING
(ECS CONTROLS)

626-0661

SIZE: A3 CAGE CODE: 31996 REV: C

NOTE AA: SEE LEBE20718 TO PROGRAM A6L3 INPUTS AND OUTPUTS.

NOTE BB: REMOVE JUMPER BAR BETWEEN ESTOP-A AND ESTOP-B TERMINAL BOARD POINTS AFTER INSTALLATION OF C27/C32 ENCLOSURE OR ENGINE MOUNTED EMERGENCY STOP. REMOVE THE JUMPER WIRE FROM BTRY POS AND ESTOP-A WITH THE INSTALLATION OF THE CUSTOMER SUPPLIED ESTOP. (CUSTOMER ESTOP IS CONNECTED ACROSS TERMINALS BTRY POS AND ESTOP-A)

NOTE CC: CUSTOMER LOADING FROM TERMINAL STRIP SHOULD BE LIMITED TO 5A RESISTIVE ONLY AND FOR EXCESS DEMAND USE BATTERY CONNECTION.

NOTE DD: SEE LEBE20718 FOR A6L3 SCADA DATA LINKS.

NOTE EE: SEE LEBE20714 TO PROGRAM DISCRETE I/O MODULE INPUTS AND OUTPUTS.

NOTE FF: REFERENCE 524-1257 FOR CIRCUIT BREAKER INSTALLATION DRAWINGS.

NOTE GG: SEE LEBE20717 FOR HMI INFORMATION.

NOTE HH: SEE LEBE20714 FOR ETHERNET I/O INFORMATION.

NOTE JJ: DIGITAL INPUT 3 IS ONLY AVAILABLE ON PACKAGES WITHOUT A CIRCUIT BREAKER.
DIGITAL INPUT 5 AND 6 ARE USED BY THE FACTORY FOR THE C175 GENSET.

NOTE KK: ANALOG INPUT (-)'S MUST BE REFERENCED TO BATTERY (-).

NOTE LL: THE A6L3 CONNECTORS USES SPRING CLAMP TERMINAL INTERFACE CONNECTIONS.

NOTE MM: CIRCUIT BREAKER TERMINAL LABELS ARE LOCATION BASED, LF=LEFT, RT=RIGHT, RR=REAR.

NOTE NN: RECOMMENDED WIRING FOR ACTIVE SENSORS.

NOTE PP: RECOMMENDED WIRING FOR RESISTIVE SENSORS.

NOTE RR: FUSES ARE DEDICATED TO A6L3 VOLTAGE SENSING ONLY. NOT FOR OTHER USES.

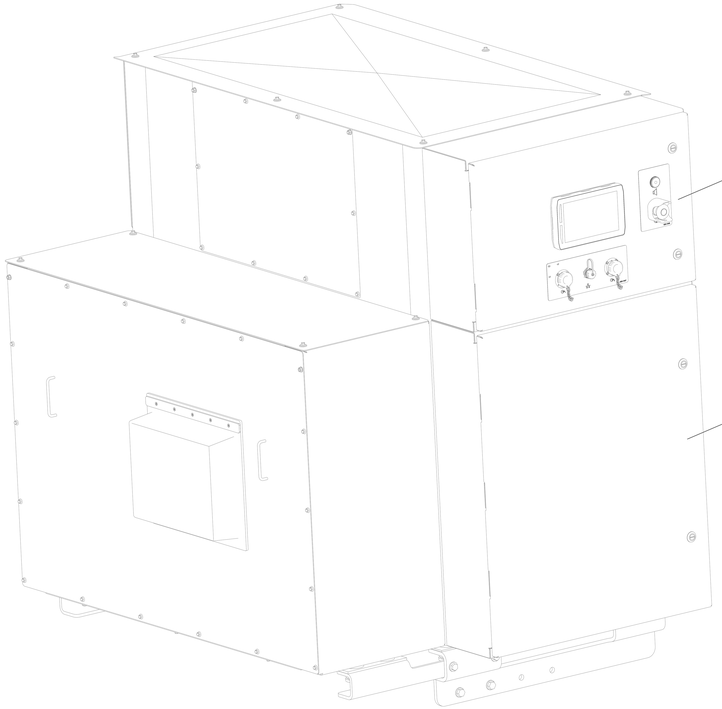

EXAMPLE CONFIGURATION. SEE ORDER OR PRICELIST FOR ALL AVAILABLE OPTIONS FOR PANEL, DISPLAY AND POWER CONNECTION LOCATIONS.

SCHEMATIC INDEX TABLE

APPLICABLE DIAGRAM PART NUMBERS

Generator Set Product	Control System	Serial Number Prefix	Modular Panel	ECS Panel	SGCP Panel	IZV ENCLOSURE	GAS BM PANEL	Diesel EIH	Diesel A6 ECM	GAS EIH 12 & 20 DSL	GAS EIH H 50Hz	GAS EIH H 60Hz	GAS EIH C & E	GAS EIH A	GAS BM EIH
			491-3960	626-0661	634-4123	430-2803	443-5152	491-3960	645-5502	548-7730	540-6381	552-5603	540-0807	542-6472	443-5152
C27/C32	EMCP 4.2B/4.3/4.4	JSJ, TZJ, ZA3	X			X		X							
C27/C32	ECS 100	JSJ, TZJ, ZA3	X	X		X		X							
C27/C32	SGCP1.2/1.3	JSJ, TZJ, ZA3	X	X	X	X		X							
3512-Diesel	EMCP 4.2B/4.3/4.4	LYP, LY7, LY8, LY9, LYH, JM2, JM3, JM4	X					X	X						
3512-Diesel	ECS 100 & 200	LYP, LY7, LY8, LY9, LYH, JM2, JM3, JM4	X	X				X	X						
3512-MUI Diesel	EMCP 4.2B/4.3	LY7, JM2	X					X							
3516-Diesel	EMCP 4.2B/4.3/4.4	LY3, LY4, LY4, LY5, LY6, LYM, JD7, FF2, F4H, ZNL, JCH, JCN, JH8, PXY, ZNZ, GBZ, GWZ	X					X	X						
3516-Diesel	ECS 100 & 200	LY3, LY4, LY4, LY5, LY6, LYM, JD7, FF2, F4H, ZNL, JCH, JCN, JH8, PXY, ZNZ, GBZ, GWZ	X	X				X	X						
3516-MUI Diesel	EMCP 4.2B/4.3	LY2, JCG	X					X							
C175	EMCP 4.2B/4.3/4.4	TB8, TE8, TZ8	X					X							
C175	ECS 100 & 200	TB8, TE8, TZ8	X	X				X							
G3512H NL	EMCP 4.3/4.4	GF4, GF5, RNK	X								X	X			
G3512 DSL	EMCP 4.3/4.4	E26, E27, E2T, E2N	X							X					
G3512 DSL	ECS 100 & 200	E26, E27, E2T, E2N	X	X						X					
G3516CNPL	EMCP 4.3/4.4	NWD, NWE, NWF	X										X		
G3516CLPB	EMCP 4.3 WALLMOUNT	HCY					X								X
G3516HNPL	EMCP 4.3/4.4	NWH, NWJ, RNH	X								X	X			
G3516 NGL	EMCP 4.3/4.4	E6R	X											X	
G3516LNGL	EMCP 4.3/4.4	E6W	X											X	
G3516LNPL	EMCP 4.3/4.4	E6W, E6Y	X											X	
G3516 DSL	EMCP 4.3/4.4	E24, F6S, F6T	X					X							
G3516 DSL	ECS 100 & 200	E24, F6S, F6T		X				X							
G3520HNPL	EMCP 4.3/4.4	GF8, GFP	X								X	X			
G3520DSL	EMCP 4.3/4.4	E28, E29, E2J, E2K, JF4, E33, E37, E32, E36, E42	X							X					
G3520DSL	ECS 100 & 200	E28, E29, E2J, E2K, JF4, E33, E37, E32, E36, E42		X						X					
G3520CLPL	EMCP 4.3/4.4	LGS, RLP	X										X		
G3520CNPL	EMCP 4.3/4.4	GZN, GZA	X										X		
G3520CLPB	EMCP 4.3/4.4	RBC	X										X		
G3516PTPL	EMCP 4.3/4.4	E6Z, E6Z	X											X	
G3520PTPL	EMCP 4.3/4.4	PZJ, GAW	X								X				

GENERATOR TERMINAL BOX PICTORIAL
NOTES AND REFERENCES
APPLICABLE FOR GAS AND DIESEL

E3187A INT-PROP
E2720G DRAWING
E0192B BRAND MARKINGS
E0013H CONFIDENTIALITY
E0012A INTERPRETATION
Caterpillar Confidential Yellow
DIMENSIONS
UNLESS OTHERWISE SPECIFIED DIMENSIONS ARE IN: MM [MM]
SCRIBE PRIMARY
TYPE: DIAGRAMS
SHEET 12 OF 20
DWG CONTROL 8894
CATERPILLAR
THE INFORMATION HEREIN IS THE PROPERTY OF CATERPILLAR INC. AND/OR ITS SUBSIDIARIES. IT MAY NOT BE USED FOR ANY PURPOSE NOT SPECIFICALLY GRANTED IN WRITING BY CATERPILLAR INC. OR ITS SUBSIDIARIES.
DIAGRAM-WIRING
ECS CONTROLS
626-0661

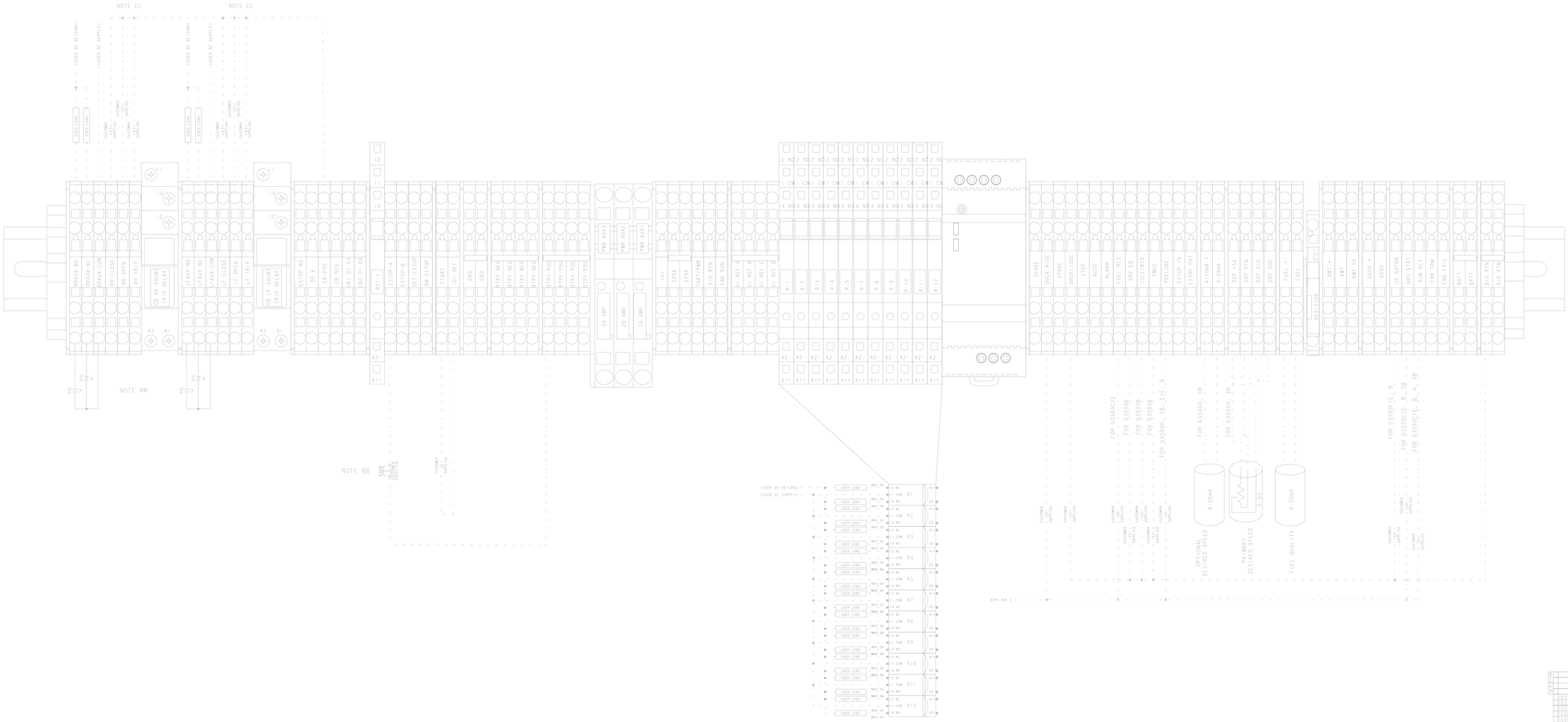

CUSTOMER CONNECTIONS
MAIN TERMINAL BLOCK ECS-100 AND 200
APPLICABLE FOR GAS AND DIESEL

REV	DESCRIPTION
A	
B	
C	
D	
E	

[S1678] INT-PROP
[C2220] DRAWING
[C1320] DRAWING MARKINGS
[E0133] CONFIDENTIALITY
[E0124] INTERPRETATION

Caterpillar: Confidential Yellow

PROPRIETARY INFORMATION	SCREEN PRIMARY
DIMENSIONS ARE IN MM AND [INCHES]	TYPE SECONDARY
FOR SIZE, SCALE AND REVISION	SHEET 13 OF 20
	DWG CONTROL E8944

CATERPILLAR

THE INFORMATION HEREON IS THE PROPERTY OF CATERPILLAR INC. AND/OR ITS SUBSIDIARIES. IT MAY NOT BE USED FOR ANY PURPOSE NOT SPECIFICALLY AUTHORIZED BY CATERPILLAR INC. OR ITS SUBSIDIARIES. IT CANNOT BE REPRODUCED IN WHOLE OR IN PART.

DIAGRAM-WIRING
ECS CONTROLS

626-0661 | SIZE A | CAGE CODE 21 | REV E

A6L3 GENSET BASE CONTROL MODULE: ECS -100

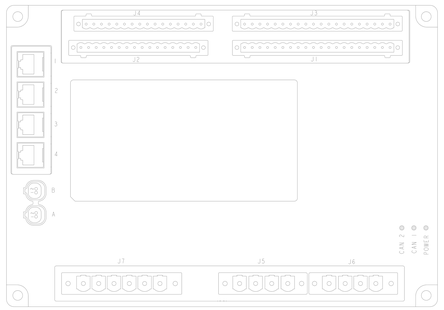

NOTE AA

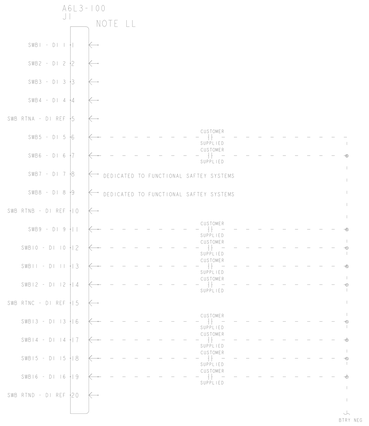

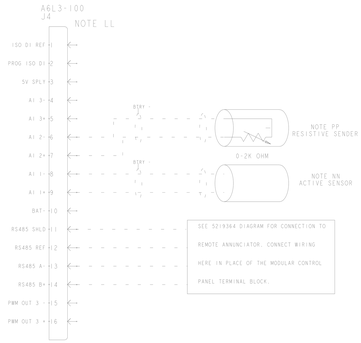

A6L3 GENSET PARALLELING CONTROL MODULE: ECS -200

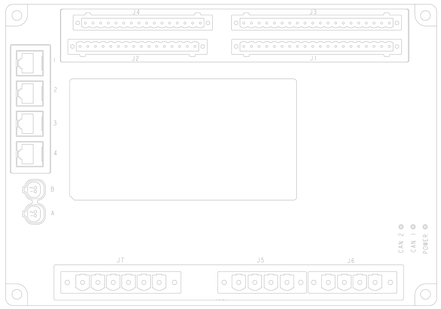

NOTE AA

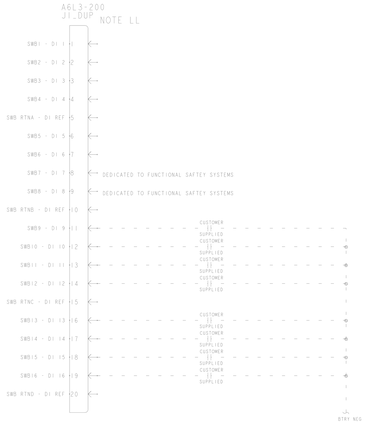

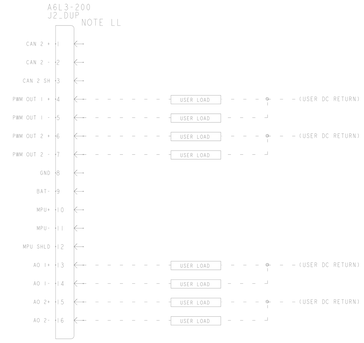

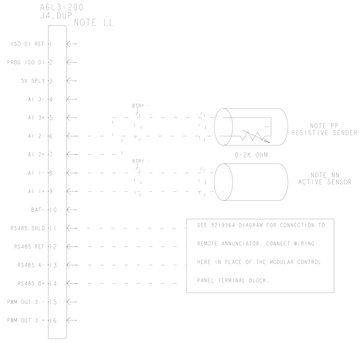

CUSTOMER CONNECTIONS
A6L3 CONTROL MODULE
APPLICABLE FOR GAS AND DIESEL

ES167A] INT-PROP
E2722G] DRAWING
E0139B DRAWI MARKINGS
E0013X] CONFIDENTIALITY
E0012A] INTERPRETATION
Caterpillar: Confidential Yellow

UNLESS OTHERWISE SPECIFIED DIMENSIONS ARE IN MM	SCREEN PRIMARY
	TYPE SECONDARY
FINISH	SHEET 14 OF 20
FIN SH ANGLE PROJECTION	ENG CONTROL E8944

CATERPILLAR

THE INFORMATION HEREON IS THE PROPERTY OF CATERPILLAR INC. AND/OR ITS SUBSIDIARIES. IT MAY NOT BE USED FOR ANY PURPOSE NOT SPECIFICALLY AUTHORIZED IN WRITING BY IT OWNER. TO OBTAIN A COPY, PLEASE CONTACT CATERPILLAR.

DIAGRAM-WIRING
ECS CONTROLS

626-0661	SIZE A	CAGE 21

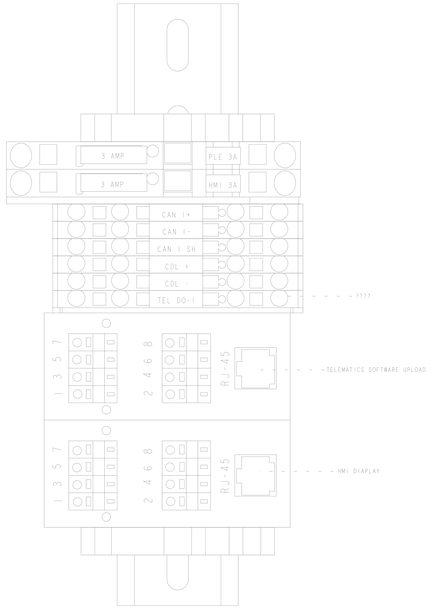

CUSTOMER CONNECTIONS

CAT CONNECT (A6N2 OR A6N1H)

APPLICABLE FOR GAS AND DIESEL

REV	DESCRIPTION	DATE	APPR
A			
B			
C			
D			
E			

[E3167A] INT-PROP
[E2720] DRAWING
[E0199] BRAND MARKINGS
[E0013A] CONFIDENTIALITY
[E0012A] INTERPRETATION

Caterpillar Confidential Yellow

UNLESS OTHERWISE SPECIFIED DIMENSIONS ARE IN MM UNLESS OTHERWISE SPECIFIED

THIRD ANGLE PROJECTION

SCRIBE PRINT SCALE 1:1

TYPE DISCHARGE

SHEET 15 OF 20

ENG CONTROL E8944

CATERPILLAR

THE INFORMATION HEREIN IS THE PROPERTY OF CATERPILLAR INC. AND/OR ITS SUBSIDIARIES. IT MAY NOT BE USED FOR ANY PURPOSE NOT SPECIFICALLY AUTHORIZED BY CATERPILLAR INC. OR ITS SUBSIDIARIES.

WIRING DIAGRAM
(ECS CONTROLS)

626-0661

SIZE A3 | CAD 21 | REV K

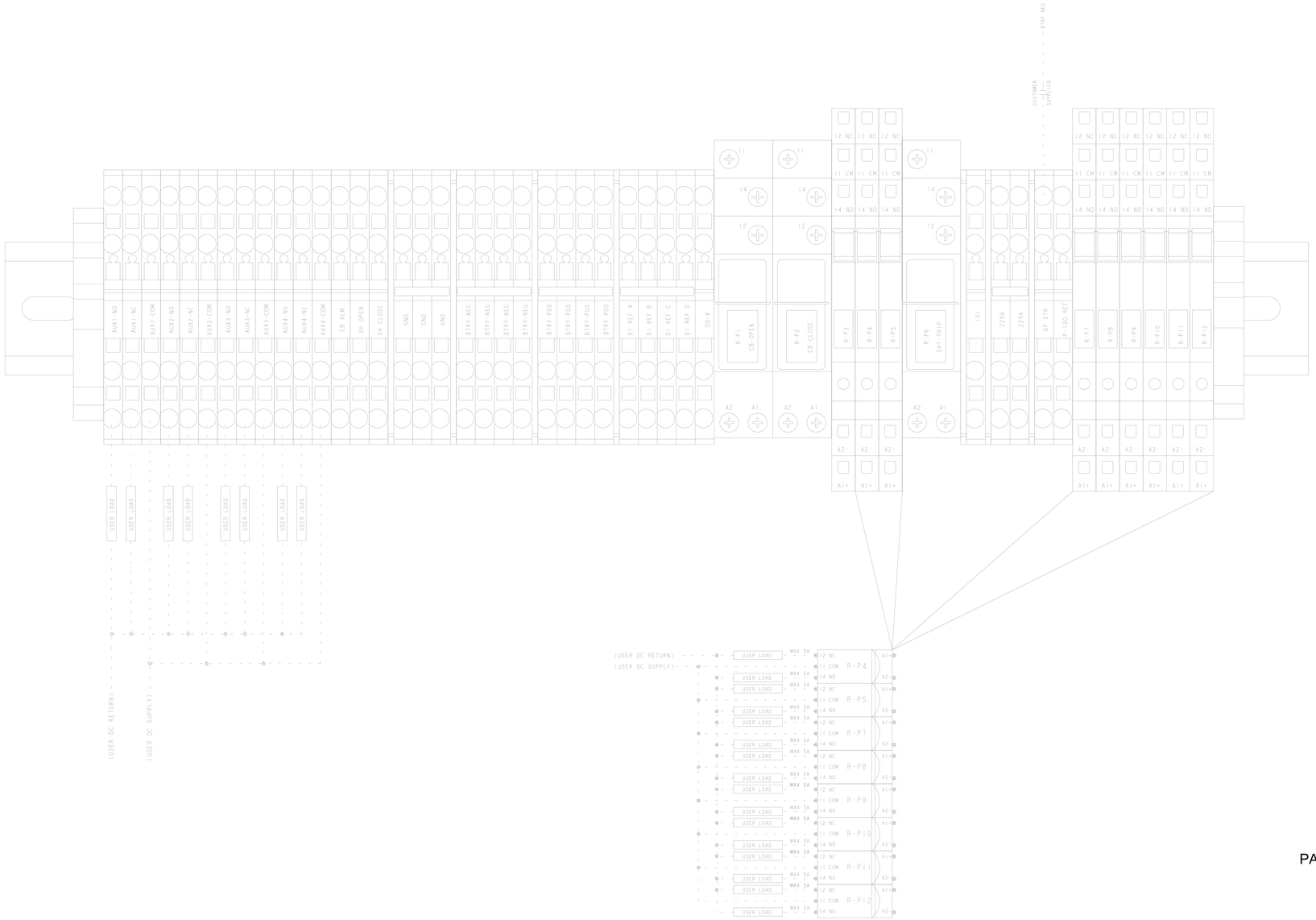

CUSTOMER CONNECTIONS
PARALLELING TERMINAL BLOCK ECS-200
APPLICABLE FOR GAS AND DIESEL

(E3167)ANT-PROF	
(E2720)DRAW/NO	
(E0129)BRAND MARKINGS	
(E0013)CONFIDENTIALITY	
(E0012)INTERPRETATION	
Caterpillar: Confidential Yellow	
DRAWING DETAILS	
UNLESS OTHERWISE SPECIFIED DIMENSIONS ARE IN MM	SCRIBE PRIMARY
DIMENSIONS ARE TO, AND BASED ON, THE PRIMARY DATUM	TYPE: SECONDARY
FACTORY ANGLE PROJECTION	SHEET 16 OF 20
	ENG CONTROL E8944

CATERPILLAR

THE INFORMATION HEREON IS THE PROPERTY OF CATERPILLAR INC. AND/OR ITS SUBSIDIARIES. IT IS SUBMITTED IN CONFIDENCE AND MUST NOT BE REPRODUCED, DISCLOSED, OR USED WITHOUT WRITTEN AUTH. OF CATERPILLAR. TO OBTAIN A COPY

DIAGRAM-WIRING
(ECS-CONTROLS)

626-0661 | SIZE A | CAGE CODE 31 | REV E

E-STOP & F-SAFETY CIRCUIT DIESEL

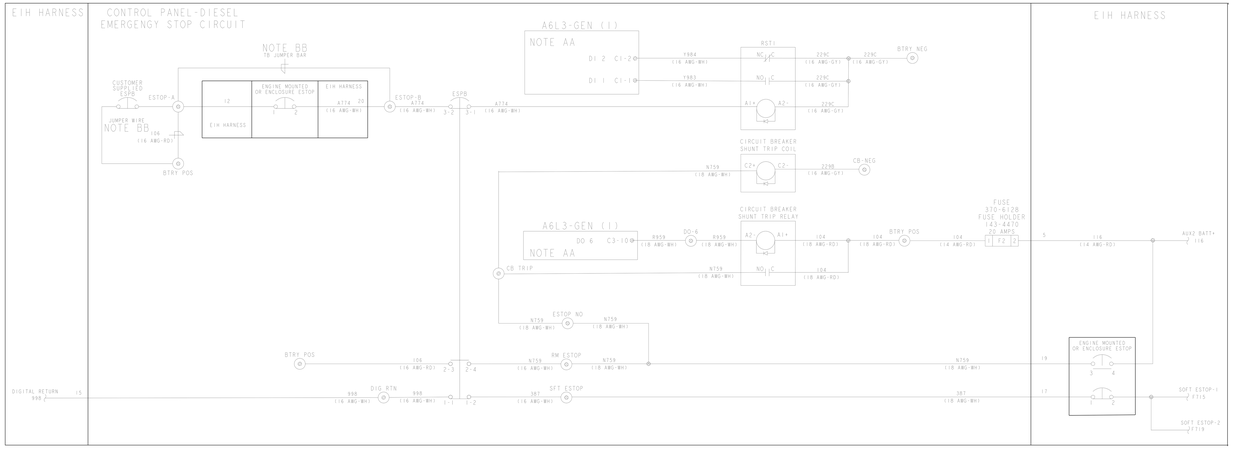

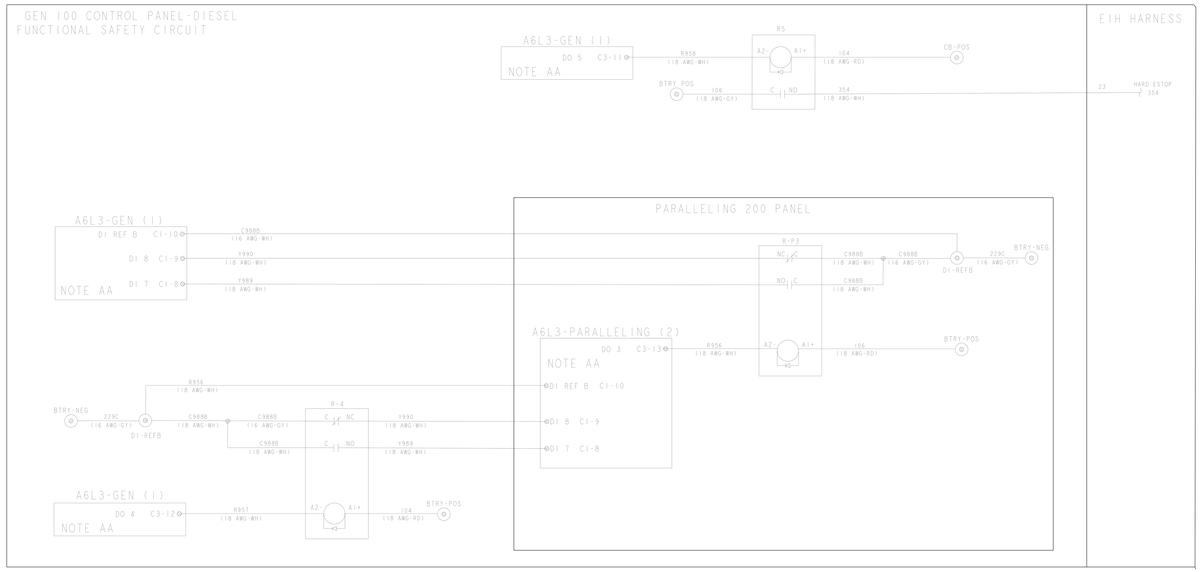

E-STOP & F-SAFETY CIRCUIT GAS

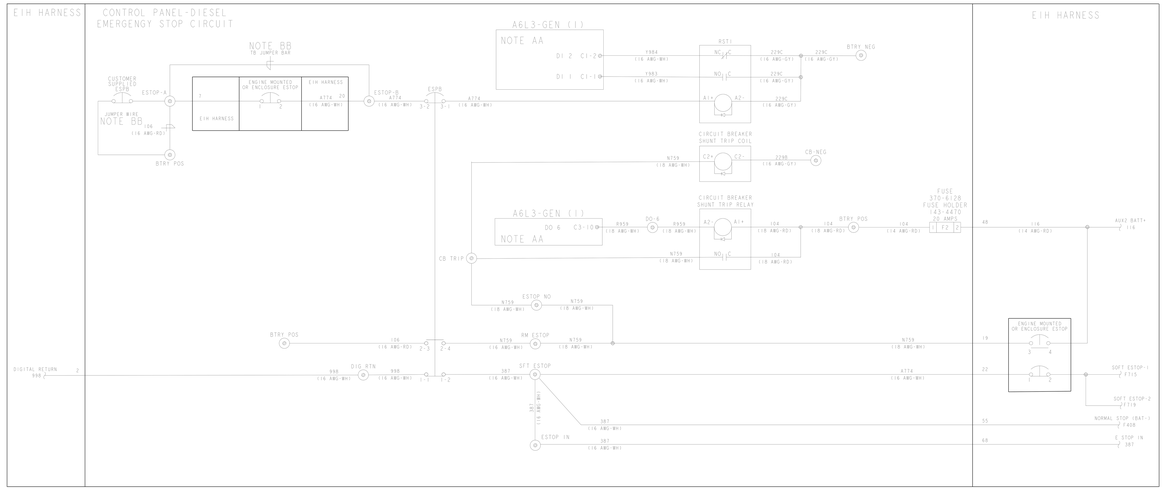

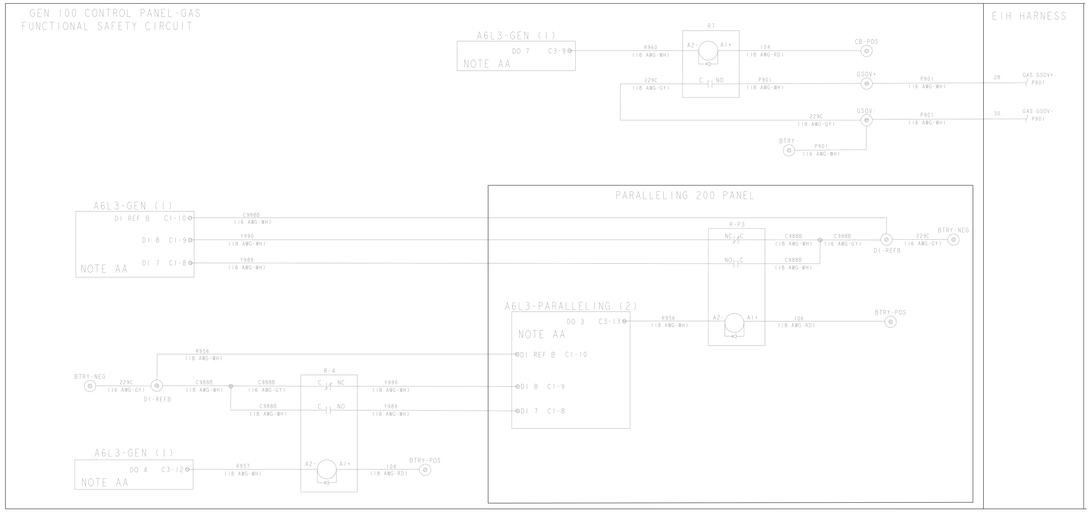

ESTOP AND FUNCTIONAL SAFETY CIRCUIT

(S1673) INT-PROP	
(S2720) DRAW/NO	
(C1928) DRAWI MARKINGS	
(E0013) CONF(DENTIALITY	
(E0124) INTERPRETATION	
NOTICE TYPE	
Caterpillar: Confidential Yellow	
FORMAT DESIGN	
PROJECTION OF SPECIFIED DIMENSIONS ONLY. DIMENSIONS MUST BE ADDED	SCRIBE PRIMARY B TYPE SECONDARY
FIRST ANGLE PROJECTION	SHEET 17 OF 20 ENG CONTROL E8944

CATERPILLAR

THE INFORMATION HEREON IS THE PROPERTY OF CATERPILLAR INC. AND/OR ITS SUBSIDIARIES. IT IS PROVIDED TO YOU FOR USE ONLY WITH CATERPILLAR PRODUCTS AND MAY NOT BE USED FOR OTHER PURPOSES, OR DISCLOSED TO OTHERS.

DIAGRAM-WIRING
(ECS CONTROLS)

626-0661 | SIZE D | CAGE 01 | REV K

CAN 1 CIRCUIT ECS

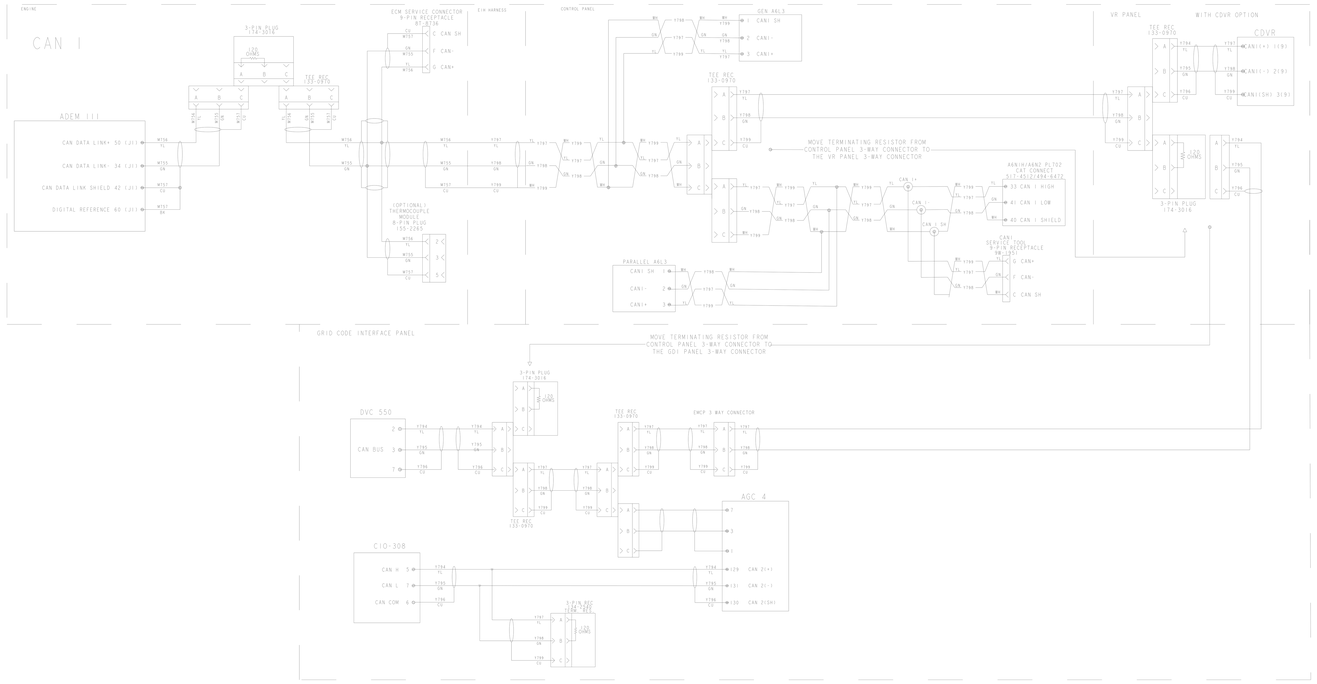

CAN 2 CIRCUIT ECS

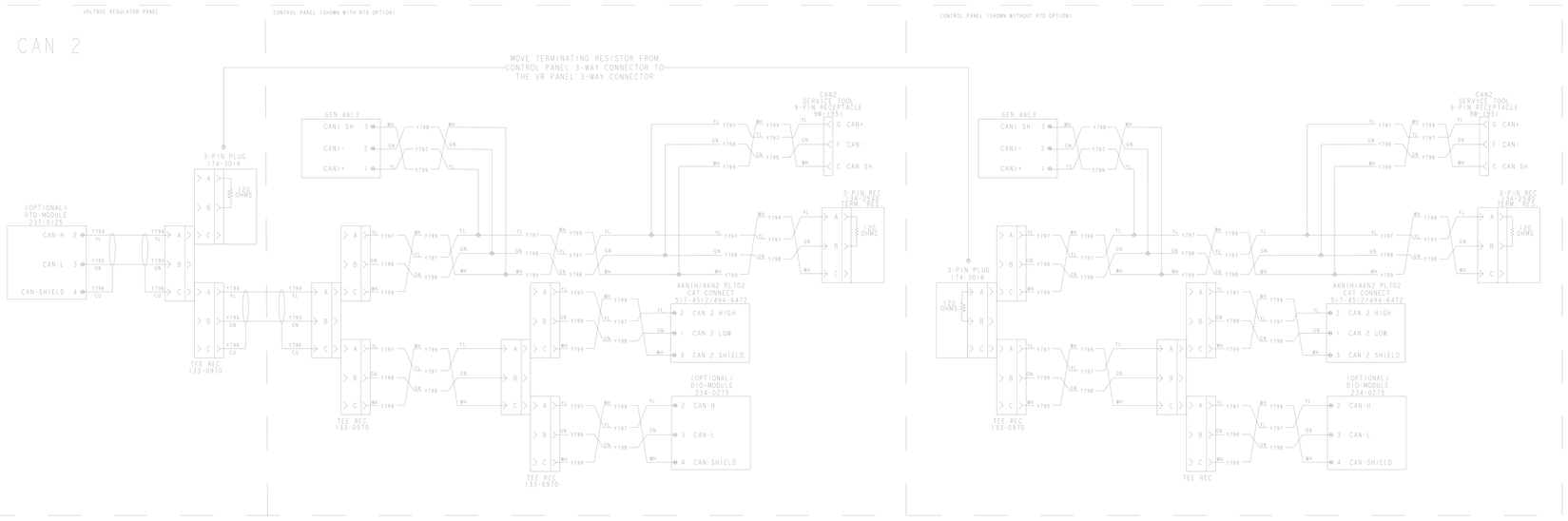

CAN-1 AND CAN-2 CIRCUIT

(E3167A) INT-PROP	
(E2720) DRAWING	
(E1928) BRAND MARKINGS	
(E0133) CONFIDENTIALITY	
(E0124) INTERPRETATION	
DIMENSIONS ARE IN MILLIMETERS	
Caterpillar: Confidential Yellow	
DRAWING TITLE	
DRAWING DIAGRAM SPECIFIED DIMENSIONS ARE IN MM UNLESS OTHERWISE SPECIFIED	SCRIBE PREMARK: A
	TYPE: SECONDARY
FAILSAFE PROJECTION	SHEET 18 OF 20
	DWG CONTROL E8944

CATERPILLAR

THE INFORMATION HEREON IS THE PROPERTY OF CATERPILLAR INC. AND/OR ITS SUBSIDIARIES. IT IS SUBMITTED IN CONFIDENCE AND MUST NOT BE DISCLOSED, NOR USED FOR ANY PURPOSE OTHER THAN THAT FOR WHICH IT IS LOANED. TO REPRODUCE.

DIAGRAM-WIRING
(ECS CONTROLS)

626-0661 | SIZE D | CAGE 21 | REV K

4 WIRE ETHERNET

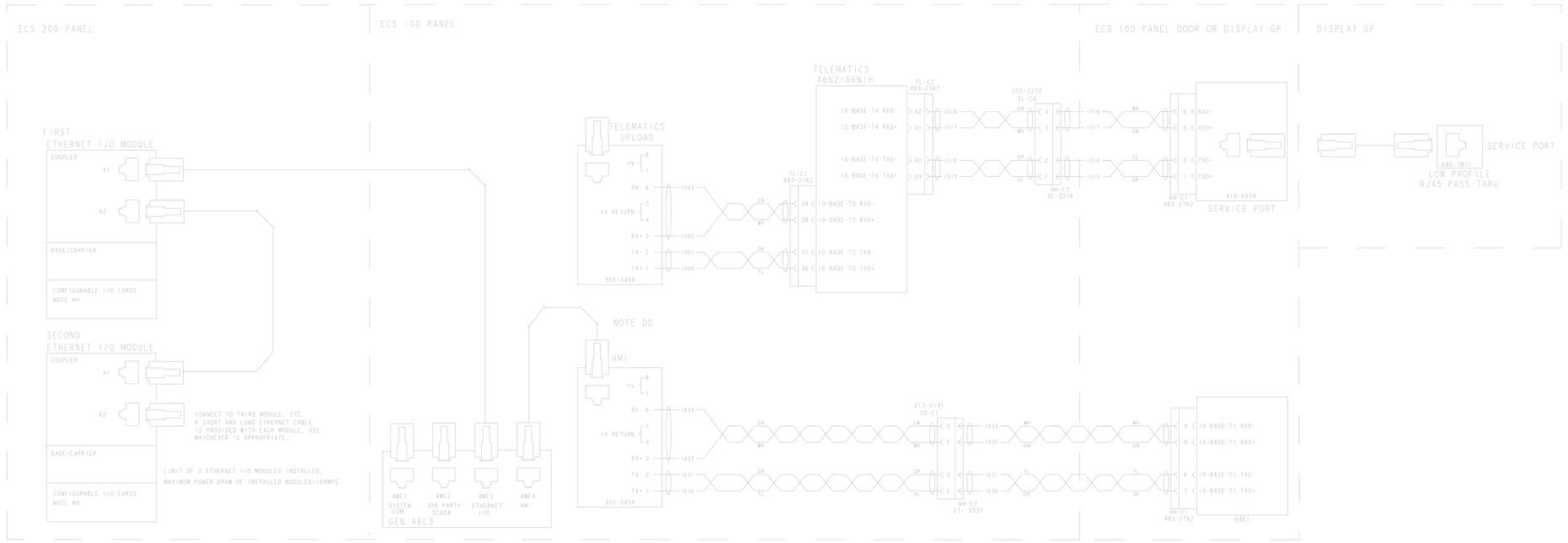

2 WIRE ETHERNET

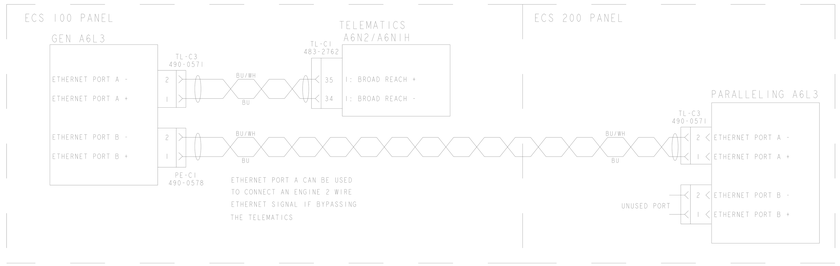

ETHERNET CIRCUIT

ES(6)TA(INT-PROP	
(2)72(DRAWING	
(6)V2(BRAND MARKINGS	
(E0)13(CONFIDENTIALITY	
(E0)2A(INTERPRETATION	
Caterpillar Confidential Yellow	
DRAWING SECTION	
PRIMARY SECTION OF SPECIFIED DRAWING NUMBER	SERIES PRIMARY
DIMENSIONS NOT TO ARE BASIC	TYPE SECONDARY
FACTORY PRODUCTION	SHEET 13 OF 20
	DWG CONTROL E8944

CATERPILLAR

THE INFORMATION HEREON IS THE PROPERTY OF CATERPILLAR INC. AND/OR ITS SUBSIDIARIES. IT IS SUBMITTED IN CONFIDENCE AND MUST NOT BE REPRODUCED, USED OR DISCLOSED EXCEPT PERMITTED BY LEGAL TERMS.

DIAGRAM-WIRING
ECS CONTROLS

626-0661 | SIZE | CAGE CODE | 21 | REV E

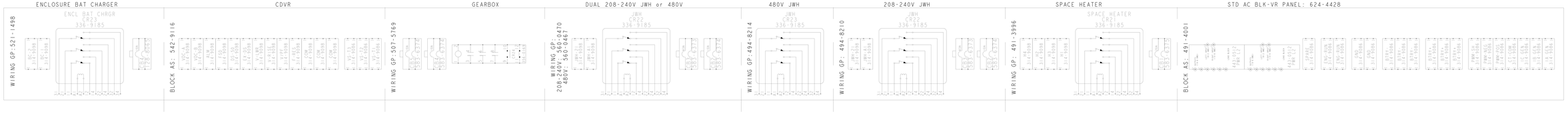

VOLTAGE REGULATOR PANEL TERMINAL BLOCK LAYOUT
SHOWING ALL AVAILABLE OPTIONS
***NOT ALL OPTIONS WILL FIT ON THE TERMINAL BLOCK
APPLICABLE FOR GAS AND DIESEL

(E2187A) INT-PROP
(E2220) DRAWING
(E0139B) BRAND MARKINGS
(E0013H) CONFIDENTIALITY
(E0012A) INTERPRETATION
Caterpillar: Confidential Yellow

CHANGE DESCRIPTION	
PRODUCT CHANGE SPECIFIED	SCREEN PRIMARY
DIMENSIONS ARE IN MM UNLESS OTHERWISE SPECIFIED	TYPE DIAGRAM
FACTORY ENGLF PRODUCTION	SHEET 20 OF 20
	ENG CONTROL E8944

CATERPILLAR

THE INFORMATION HEREON IS THE PROPERTY OF CATERPILLAR INC. AND/OR ITS SUBSIDIARIES. IT MAY NOT BE USED FOR ANY PURPOSE NOT SPECIFICALLY AUTHORIZED IN WRITING BY CATERPILLAR INC. OR ITS SUBSIDIARIES.

DIAGRAM-WIRING
(ECS CONTROLS)

626-0661 | SIZE A | CAGE CODE 31 | REV C

CARTER POWER SYSTEMS

Section Five
SCR

SCR Package Brochure
Technical Data and Horizontal Force Moment Table
SCR Drawings
A&I Guide
SCR Conduit Schedule

Refer to kW Mechanical Comments

ONE SOURCE. ZERO STRESS.

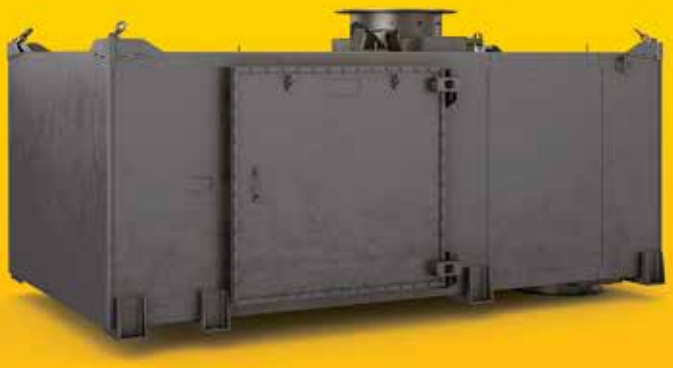

The Cat® Retrofit Selective Catalytic Reduction (SCR) System

IT'S YOUR CHOICE – MAKE IT COUNT.

When you're adding an emissions reduction system, it makes sense to use the one built by the people who built your engine.

NOx reduced up to 95%

PM reduced over 85%

CO reduced up to 95%

HC reduced up to 90%

SINGLE-SOURCE CONFIDENCE

The Cat® Retrofit SCR System can help you meet challenging national, state, local, and site emissions restrictions in a compact package.

- **Dramatically reduces NOx and can be combined with DOC or DPF technology to reduce CO, HC, and PM**
- **Works with diesel, natural gas, or dual-fuel engines**
- **Easy to install and service**
- **Trusted Caterpillar technology built to the standards that you expect**

Having a single point of contact for all your emissions reduction needs reduces downtime and simplifies emissions compliance so you can focus on your business. Caterpillar and Cat dealers provide the power and support to keep your operations up and running.

YOUR INDUSTRY PARTNERS

With industry-leading technology and the world's largest and most responsive dealer network, Caterpillar is ready to be your one safe source.

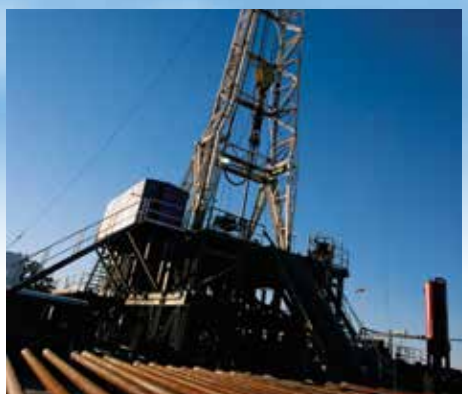

THE POWER OF QUALITY

Every component in the Cat Retrofit SCR System is designed and manufactured to Caterpillar product standards. We take pride in our people, process, product, and service excellence. Our goal is to meet the specific needs of your operation with the highest quality and value.

OUR COMMITMENT TO YOU

Your satisfaction and loyalty are the focus our commitment. Caterpillar and your Cat dealer are on the job in countless applications around the world, working with you to deliver integrated power solutions that help your business succeed.

GLOBAL SUPPORT

Your Cat Retrofit SCR System is covered by the global Cat dealer network. Trained technicians ensure that parts, service, and support are always available. Our strength is in our partnership – Customer, Caterpillar, and Cat dealers with a united goal of high quality products and services. We're built to exceed your expectations.

For more information, contact your local Cat dealer or visit www.cat.com/emissionssolutions.

BUILT FOR IT.™

PEDJ0163

©2014 Caterpillar. All rights reserved. CAT, CATERPILLAR, BUILT FOR IT, their respective logos, "Caterpillar Yellow" and the "Power Edge" trade dress, as well as corporate and product identity used herein, are trademarks of Caterpillar and may not be used without permission.

CAT® RETROFIT SELECTIVE CATALYTIC REDUCTION (SCR) SYSTEM

Horizontal Design

Serviceability

- SCR catalyst hatch is hinged for ease of service during checks and fully removable for access during SCR catalyst removal and replacement.
- ~~DOC/DPF hatch can be lifted by one technician without the need for cranes.~~
- Nut strips provide ease in securing of hatches after service.
- Catalysts are packaged in lightweight, easy-to-handle modules.

Performance

- Dual wall reactor housing with standard insulation blanket provides superior heat retention for maximum emissions reduction.
- Closed loop dosing control system ensures highest levels of emissions reductions at lowest cost.
- Integral silencer design provides high levels of sound reduction.

Flexibility

- Addition of DOC or DPF catalysts can be performed at a later date with no changes to unit.

Support

- One source for warranty on complete package that includes worldwide Cat® dealer coverage on engine and aftertreatment.

Durability

- Reactor housing is constructed of stainless steel for superior life in indoor and outdoor installations.
- Standard powder-coated steel dosing cabinet provides protection in indoor environments while an optional stainless steel cabinet provides additional durability in corrosive indoor environments.
- Specialized mounting feet allow natural thermal expansion during operation, reducing the potential for stress cracking.

Ease of Installation

- Mounting bosses provide easy installation of harnesses on site as well as a durable method of retention during operation.
- Integral lifting eyes reduce guesswork and potential safety issues involved with moving the unit by providing attachment points that promote stability.
- Integrated mixing tube and silencing provide easy installation.

Safety

- Standard insulation blanket reduces surface temperature for additional safety.
- E-stop on dosing cabinet enhances safety by providing the ability to completely shut down the SCR system in an emergency situation.

CONTACT INFORMATION	
Project Name: Cloud	Date: August 26, 2024
CATERPILLAR PRIMARY CONTACT Name: Paul Cook	DEALER CONTACT Name: Maria Drybread
Phone: 309-229-9726	Phone: 410-365-7009
Email: cook_paul@cat.com	Email: Maria_Drybread@cartermachinery.com

QUOTE TYPE	
Aftertreatment	Quotation#: PC08092024-01 Revision#: 1

ENGINE DETAILS	
Engine Model	3516E
Engine Serial Number	N/A
Performance Number	EM6285
Power	3,276 Bkw @ 100% load
Exhaust Flow Rate	18,638 kg/hr @ 100% load
Engine Outlet Temp	484 °C @ 100% load
Fuel:	ULSD

EMISSION REQUIREMENTS
NOx: 93.5% reduction @ 100% load

Caterpillar: Confidential Green

SCOPE OF SUPPLY		
Description	**CAT**	**Dealer/Others**
CEM (Clean Emissions Module)	X	
CEM Support Structure		X
Dosing Cabinet	X	
Wiring Harnesses (including inlet/outlet NOx and temperature sensors and inlet backpressure sensor)	X	
DEF/AIR Lines from Dosing Cabinet to CEM	X	
DEF Storage		X
Compressed Air Supply		X
Installation		X
Freight		X
Optional Pricelist Items		
CEM Insulation Blanket	X	
DEF Supply Line 40 Micron Filter	X	
DEF Transfer Pump	X	

Caterpillar: Confidential Green

TECHNICAL DESCRIPTION - CEM

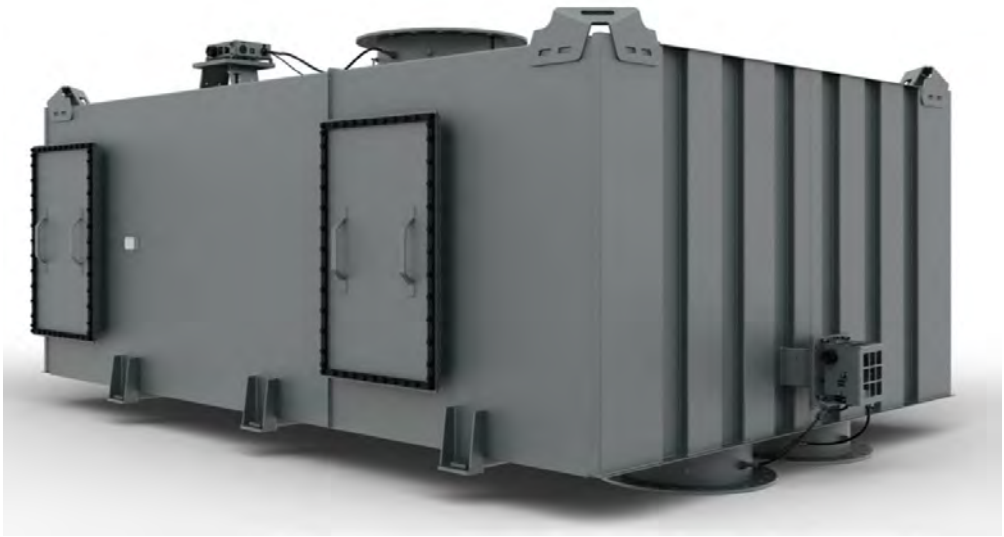

Part #:	DTO
Model #:	5X4X2
Catalyst Type(s):	SCR (High Temp)
Construction:	409SS
DEF Mixer:	Integrated
DEF Injector Location:	Side
Inlet(s):	2 X 20” ANSI (Bottom)
Outlet(s):	1 X 24” ANSI (Side, right and left side option available, 50% split)
Access Hatch Location (SCR):	Side
Access Hatch Location (DOC/DPF):	Side
Length:	4165 mm/164”
Width:	3190 mm/125.5”
Height:	1736 mm/68”
Weight:	3400 kg/7500 lbs. (approx..)
Drawings:	Engine Drawing Design Center
Estimated backpressure @ 100% load:	2.7 kPa

Caterpillar: Confidential Green

TECHNICAL DESCRIPTION - DOSING CABINET	
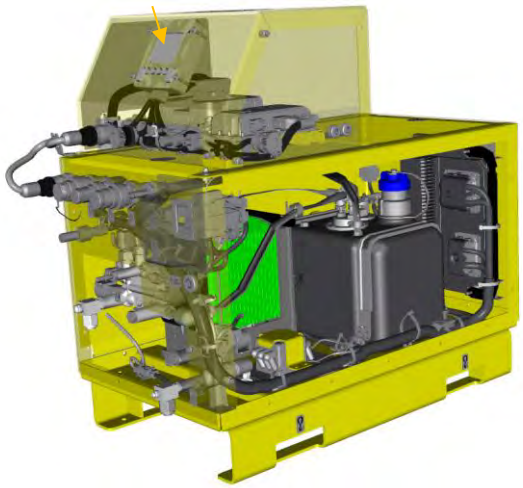	
Part #:	485-2865
Construction:	Painted Steel
Length:	980.6 mm/38.6”
Width:	529.2 mm/20.83”
Height:	902.6 mm/35.54”
Weight:	148 kg/326 lbs
Drawings:	Engine Drawing Design Center
Min. dosing temp. (exhaust temp @ CEM inlet):	300° C/572° F

Caterpillar: Confidential Green

TECHNICAL DESCRIPTION – DOSING CABINET WIRING HARNESS	
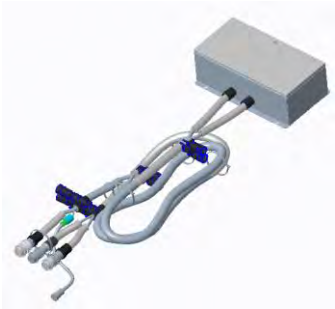	
Part #:	510-8380
Approx. Length:	4060 mm/160”

TECHNICAL DESCRIPTION – CEM WIRING HARNESS	
Part #:	516-3975
Approx. Length:	3860 mm/152”

Caterpillar: Confidential Green

TECHNICAL DESCRIPTION – DEF/AIR LINES	
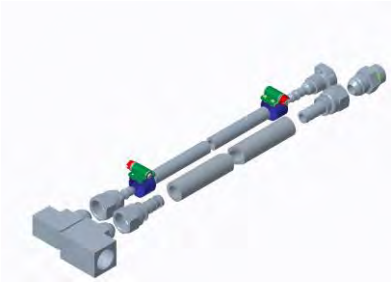	
Part #:	539-1385
DEF Line Dimensions:	7.5 mm ID X 18,300 mm/60 ft.
DEF Line Material:	EPDM rubber
Air Line Dimensions:	12.5 mm ID X 18,300 mm/60 ft.
Air Line Material:	Reinforced synthetic rubber

TECHNICAL DESCRIPTION – CEM INSULATION BLANKET	
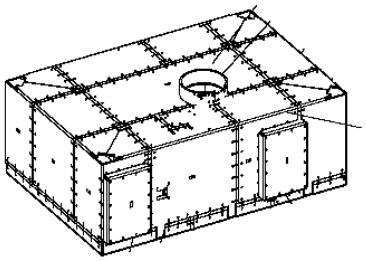	
Thickness:	1”

Caterpillar: Confidential Green

SUPPORTING DOCUMENTATION		
Item	**Media #**	**Location**
Application & Installation Guide	LEBE0035	Electronic Media Center (EMC)
Operation & Maintenance Manual	M0075634	Service Information System (SIS)
Systems Operation Testing & Adjusting	M0070376	Service Information System (SIS)
Parts Manual	M0077572	Service Information System (SIS)
Commissioning Report	UENR4339	Service Information System (SIS)
Schematic – Retrofit SCR Electrical System	UENR4742	Service Information System (SIS)
Warranty	SELF5612	warranty.cat.com
CEM Insulation Instructions	M0112967	Service Information System (SIS)
DEF Filter A&I Newsletter	LEDM0194	Electronic Media Center (EMC)

Caterpillar: Confidential Green

Results: CES Retrofit Load limit capability at Rated temperature condition

Outlet Load Limit at Rated Temperature Conditions

Outlet(LCF)		Moment(KN-m)												
		0	0.2	0.4	0.5	0.6	0.8	1	1.2	1.4	1.5	1.6	1.8	2
Force(KN)	0	40.93	10.09	5.76	4.74	4.03	3.10	2.51	2.12	1.83	1.71	1.61	1.44	1.30
	0.2	28.74	9.14	5.43	4.52	3.86	3.00	2.45	2.18	1.88	1.75	1.65	1.47	1.32
	0.4	22.14	8.35	5.14	4.31	3.72	2.91	2.39	2.13	1.84	1.72	1.62	1.44	1.30
	0.5	19.87	8.00	5.01	4.22	3.65	2.87	2.36	2.11	1.82	1.71	1.60	1.43	1.29
	0.6	18.01	7.68	4.88	4.13	3.58	2.82	2.33	2.09	1.81	1.69	1.59	1.42	1.29
	0.8	15.18	7.12	4.65	3.96	3.45	2.74	2.28	2.04	1.77	1.66	1.57	1.40	1.27
	1	13.12	6.63	4.43	3.80	3.33	2.67	2.22	2.00	1.74	1.63	1.54	1.38	1.25
	1.2	11.55	6.20	4.24	3.66	3.22	2.60	2.17	1.96	1.71	1.61	1.52	1.36	1.24
	1.4	10.31	5.83	4.06	3.53	3.12	2.53	2.13	1.92	1.68	1.58	1.49	1.34	1.22
	1.5	9.79	5.66	3.98	3.46	3.07	2.50	2.10	1.82	1.67	1.57	1.48	1.33	1.21
	1.6	9.32	5.49	3.90	3.40	3.02	2.46	2.08	1.88	1.65	1.56	1.47	1.32	1.21
	1.8	8.50	5.20	3.75	3.29	2.93	2.40	2.04	1.85	1.62	1.53	1.45	1.31	1.19
	2	7.81	4.93	3.61	3.18	2.84	2.34	1.99	1.81	1.60	1.51	1.43	1.29	1.18

Margin Factor = Material Yield Strength/ Stress under Piping Load

- No Piping
- 1.0 < Margin Factor < 2.0
- Margin Factor > 2.0
- Margin Factor < 1.0

Material Yield Strength @ Rated,1E1113 =221 MPa

From MVISON Data

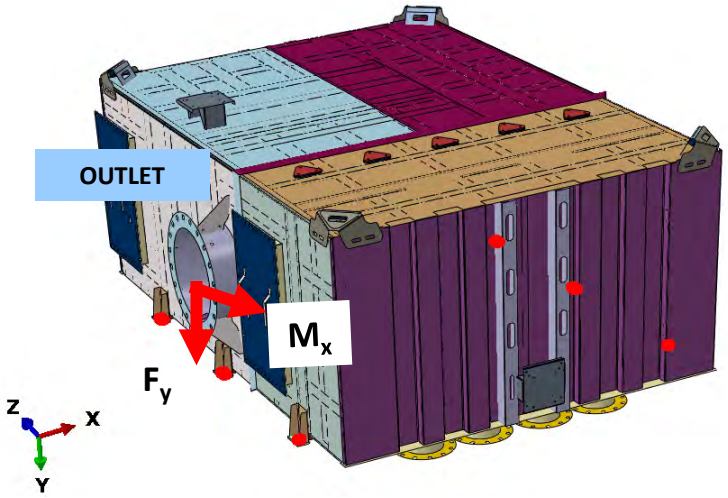

METRIC 660-5235

SEQ	ITEM	QTY	MEAS UNIT	PART NO.	NAME
					PARTS LIST
B	1	1		613-3372	SENSOR GP-ELEC
B	2	1		613-3319	SENSOR GP-MTG&-A
B	3	1		617-8481	INJECTOR GP-EXH
B	4	1		633-2359	HARDWARE GP
	5	1		660-5234	CONV GP-CTLTC
	6	1		632-7744	CATALYST GP
	7	1		645-8921	CATALYST GP
					REQUIREMENTS
D	-	-		602-6650	INSTRUCTIONS
E	-	-		439-7420	INSTRUCTION-TEST
F	-	-		347-0164	INSTRUCTIONS
F	-	-		347-1398	SOFTWARE

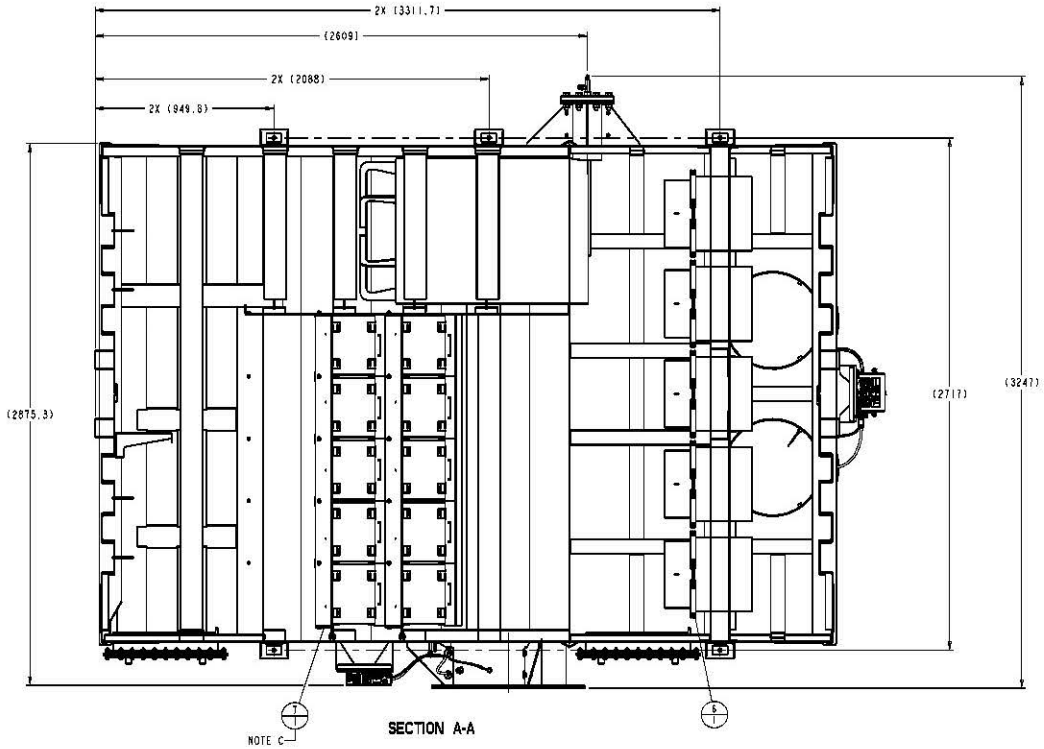

SECTION A-A

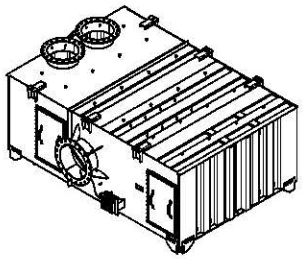

PICTORIAL VIEW

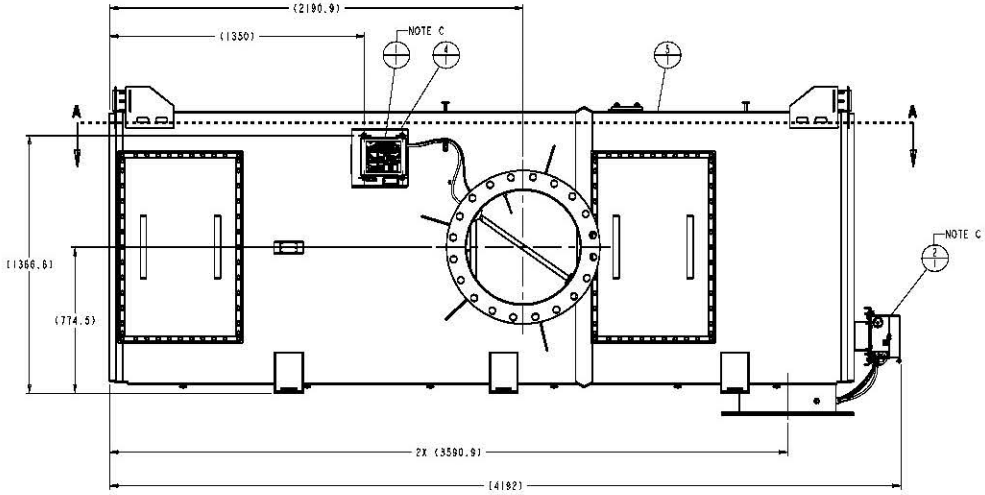

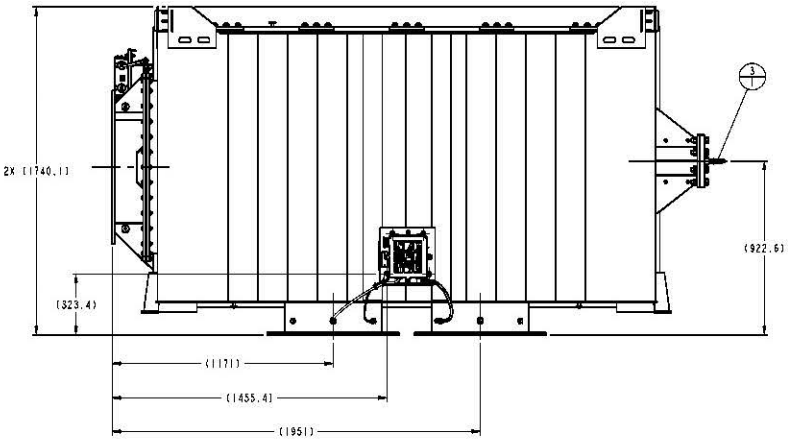

EMISSIONS RELATED NO DEVIATION OR CHANGES WITHOUT ENGINE APPROVAL

NOTE A: THE CONSIST OF THIS DRAWING SHALL NOT CONTAIN MIN/MAX NOTES OR BE CHANGED BY USING ATTACHMENT OR STANDARD OR CONSIST REMOVALS IN EDS OR IN ANY OTHER SYSTEMS

NOTE B: SHIP LOOSE

NOTE C: SEE COMPONENT DRAWING FOR TIGHTENING REQUIREMENTS

NOTE D: USE TEST PARAMETERS SET# 23

NOTE E: SEE TEST PROCEDURE

NOTE F: REFER TO INSTRUCTIONS FOR PROGRAMMING AND TESTING THE AFTERTREATMENT IDENTIFICATION DEVICE

REV		
	IE5167A	INT-PROP
A	IE4185	DRAWING-POS. BLD
	IE2966A	IDENT
	IE2722A	DRAWING
	IE2457	EMISSIONS CONT
	IE0507D	IDENT
	IE0279X	TIGHTENING
	IE0198F	BRAND MARKINGS
	IE0013Y	CONFIDENTIALITY
	IE0012B	INTERPRETATION
	IE0011	INTPR & TOL

Caterpillar Confidential Yellow

PROD. X OTHER

UNLESS OTHERWISE SPECIFIED DIMENSIONS ARE IN mm DIMENSIONS W/O TOL. ARE BASIC

VERSION TYPE PRIMARY X SECONDARY

THIRD ANGLE PROJECTION SHEET 1 OF 1

PRV CONTROL PS111

CATERPILLAR

MODULE AR-EXH

660-5235 - 00 E

METRIC 660-5240

SYM	ITEM	QTY	MEAS UNIT	PART NO.	NAME
					PARTS LIST
B	1	1		613-3319	SENSOR GP-MTG&-A
B	2	1		613-3372	SENSOR GP-ELEC
B	3	1		617-8481	INJECTOR GP-EXH
	4	1		632-7744	CATALYST GP
B	5	1		633-2359	HARDWARE GP
	6	1		659-8217	CATALYST GP
	7	1		660-5239	CONV GP-CTLTC
					REQUIREMENTS
D	-	-		602-6650	INSTRUCTIONS
E	-	-		439-7420	INSTRUCTION-TEST
F	-	-		347-0164	INSTRUCTIONS
F	-	-		347-1398	SOFTWARE

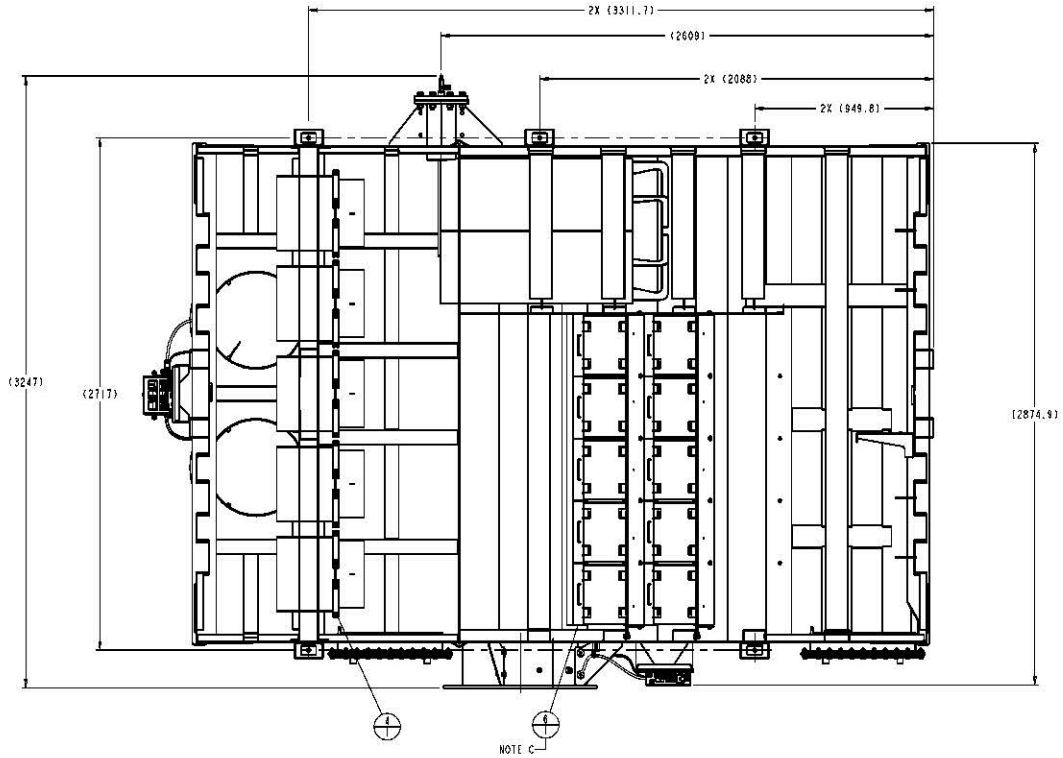

SECTION A-A

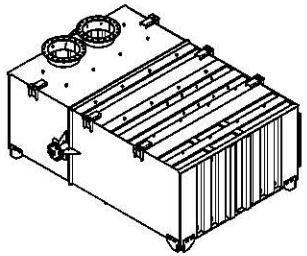

PICTORIAL VIEW

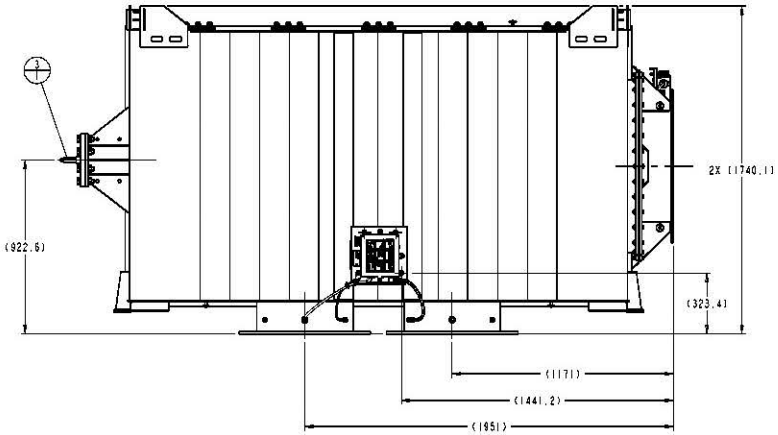

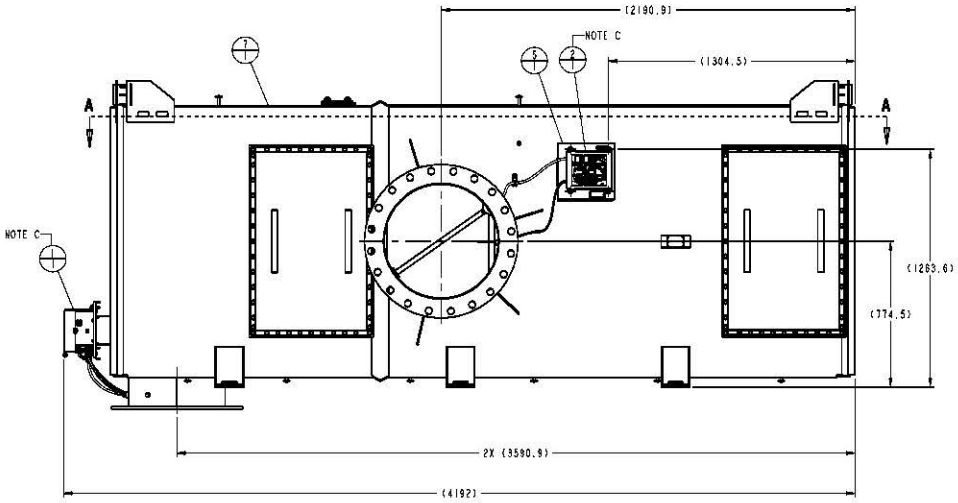

EMISSIONS TEST NO DEVIATION OR CHANGES WITHOUT ENGRG APPROVAL

NOTE A: THE CONSIST OF THIS DRAWING SHALL NOT CONTAIN MIN/MAX NOTES OR BE CHANGED BY USING ATTACHMENT OR STANDARD OR CONSIST REMOVALS IN EDS OR IN ANY OTHER SYSTEMS

NOTE B: SHIP LOOSE

NOTE C: SEE COMPONENT DRAWING FOR TIGHTENING REQUIREMENTS

NOTE D: USE TEST PARAMETERS SET #23

NOTE E: SEE TEST PROCEDURE

NOTE F: REFER TO INSTRUCTIONS FOR PROGRAMMING AND TESTING THE AFTERTREATMENT IDENTIFICATION DEVICE

SYM		
	IE5167A	INT-PROP
A	IE4185	DRAWING-POS BLD
	IE2966A	IDENT
	IE2722A	DRAWING
	IE2457	EMISSIONS CONT
	IE0507D	IDENT
	IE0279X	TIGHTENING
	IE0198F	BRAND MARKINGS
	IE0013Y	CONFIDENTIALITY
	IE0012B	INTERPRETATION
	IE0011	INTPR & TOL

Caterpillar Confidential Yellow

PROD. X OTHER

UNLESS OTHERWISE SPECIFIED DIMENSIONS ARE IN mm DIMENSIONS W/O TOL. ARE BASIC

VERSION TYPE PRIMARY X SECONDARY

THIRD ANGLE PROJECTION SHEET 1 OF 1 PRV CONTROL PS111

CATERPILLAR

THE INFORMATION CONTAINED HEREIN IS PROPRIETARY TO CATERPILLAR INC. AND MAY BE CONFIDENTIAL OR SUBSTANTIALLY SIMILAR TO INFORMATION WHICH IS PROPRIETARY TO CATERPILLAR INC. UNDER THE CATERPILLAR INC. CONFIDENTIALITY AGREEMENT. THIS INFORMATION MAY BE USED ONLY FOR THE PURPOSE SPECIFIED IN THE CONFIDENTIALITY AGREEMENT. THIS INFORMATION MAY NOT BE DISCLOSED TO THIRD PARTIES OR USED FOR ANY OTHER PURPOSE WITHOUT THE EXPRESS WRITTEN CONSENT OF CATERPILLAR INC. UNDER THE CONFIDENTIALITY AGREEMENT.

MODULE AR-EXH

(5X4X2 DTO 477) (RH)

660-5240 VER - CHG 00 E

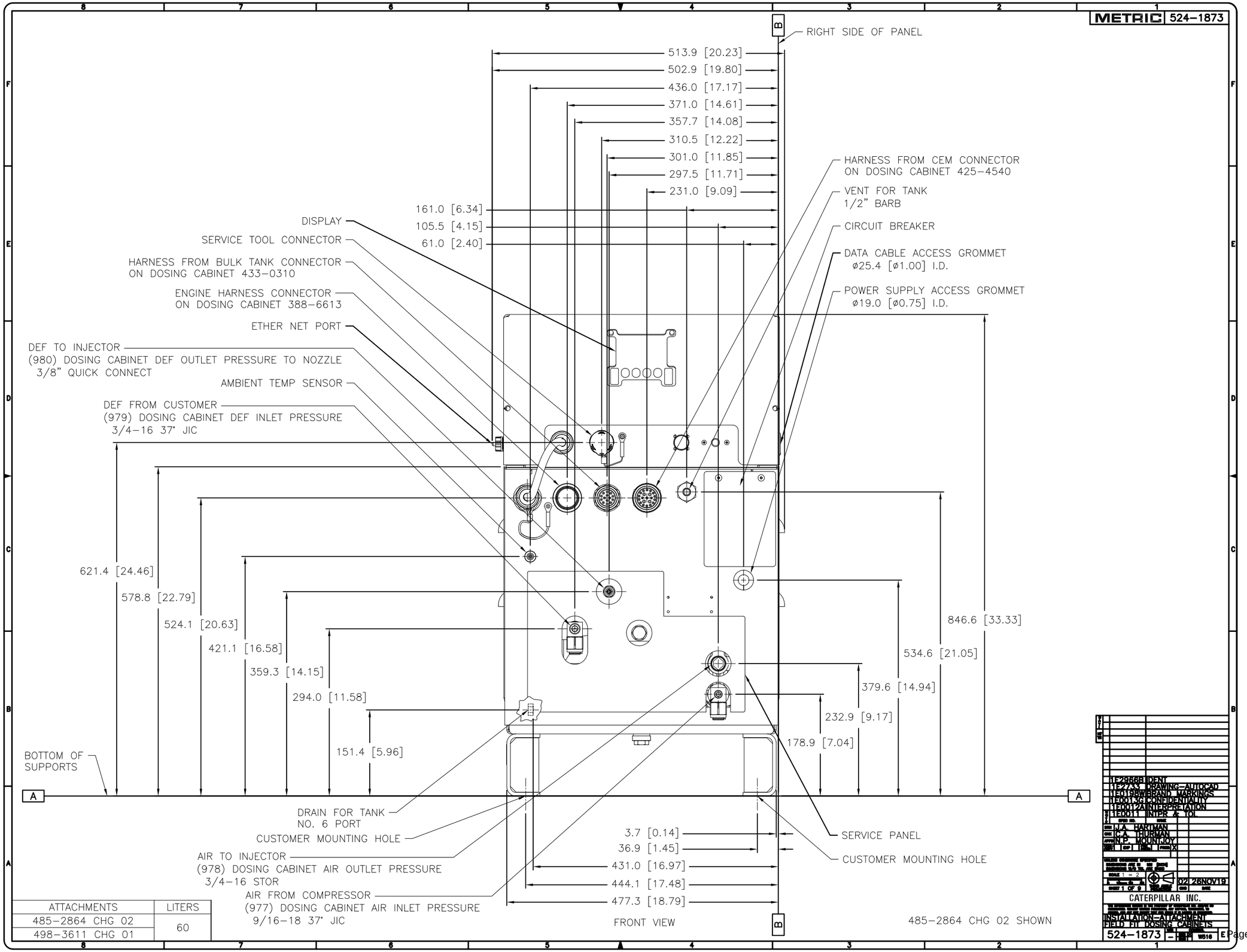
METRIC 524–1873
RIGHT SIDE OF PANEL
513.9 [20.23]
502.9 [19.80]
436.0 [17.17]
371.0 [14.61]
357.7 [14.08]
310.5 [12.22]
301.0 [11.85]
297.5 [11.71]
231.0 [9.09]
161.0 [6.34]
105.5 [4.15]
61.0 [2.40]
HARNESS FROM CEM CONNECTOR ON DOSING CABINET 425–4540
VENT FOR TANK 1/2" BARB
CIRCUIT BREAKER
DATA CABLE ACCESS GROMMET ø25.4 [ø1.00] I.D.
POWER SUPPLY ACCESS GROMMET ø19.0 [ø0.75] I.D.
DISPLAY
SERVICE TOOL CONNECTOR
HARNESS FROM BULK TANK CONNECTOR ON DOSING CABINET 433–0310
ENGINE HARNESS CONNECTOR ON DOSING CABINET 388–6613
ETHER NET PORT
DEF TO INJECTOR (980) DOSING CABINET DEF OUTLET PRESSURE TO NOZZLE 3/8" QUICK CONNECT
AMBIENT TEMP SENSOR
DEF FROM CUSTOMER (979) DOSING CABINET DEF INLET PRESSURE 3/4–16 37° JIC
621.4 [24.46]
578.8 [22.79]
524.1 [20.63]
421.1 [16.58]
359.3 [14.15]
294.0 [11.58]
151.4 [5.96]
846.6 [33.33]
534.6 [21.05]
379.6 [14.94]
232.9 [9.17]
178.9 [7.04]
BOTTOM OF SUPPORTS
A
A
DRAIN FOR TANK NO. 6 PORT
CUSTOMER MOUNTING HOLE
AIR TO INJECTOR (978) DOSING CABINET AIR OUTLET PRESSURE 3/4–16 STOR
AIR FROM COMPRESSOR (977) DOSING CABINET AIR INLET PRESSURE 9/16–18 37° JIC
3.7 [0.14]
36.9 [1.45]
431.0 [16.97]
444.1 [17.48]
477.3 [18.79]
SERVICE PANEL
CUSTOMER MOUNTING HOLE
FRONT VIEW
B
B
485–2864 CHG 02 SHOWN
ATTACHMENTS
LITERS
485–2864 CHG 02
498–3611 CHG 01
60
1E2868B IDENT
1E2733 DRAWING–AUTOCAD
1E0198W BRAND MARKINGS
1E0013G CONFIDENTIALITY
1E0012A INTERPRETATION
1E0011 INTPR & TOL
W.A. HARTMAN
C.A. THURMAN
N.P. MONTJOY
SCALE 1 = 2
SHEET 1 OF 9
02 26NOV19
CATERPILLAR INC.
INSTALLATION–ATTACHMENT
FIELD FIT DOSING CABINETS
524–1873
W516
E

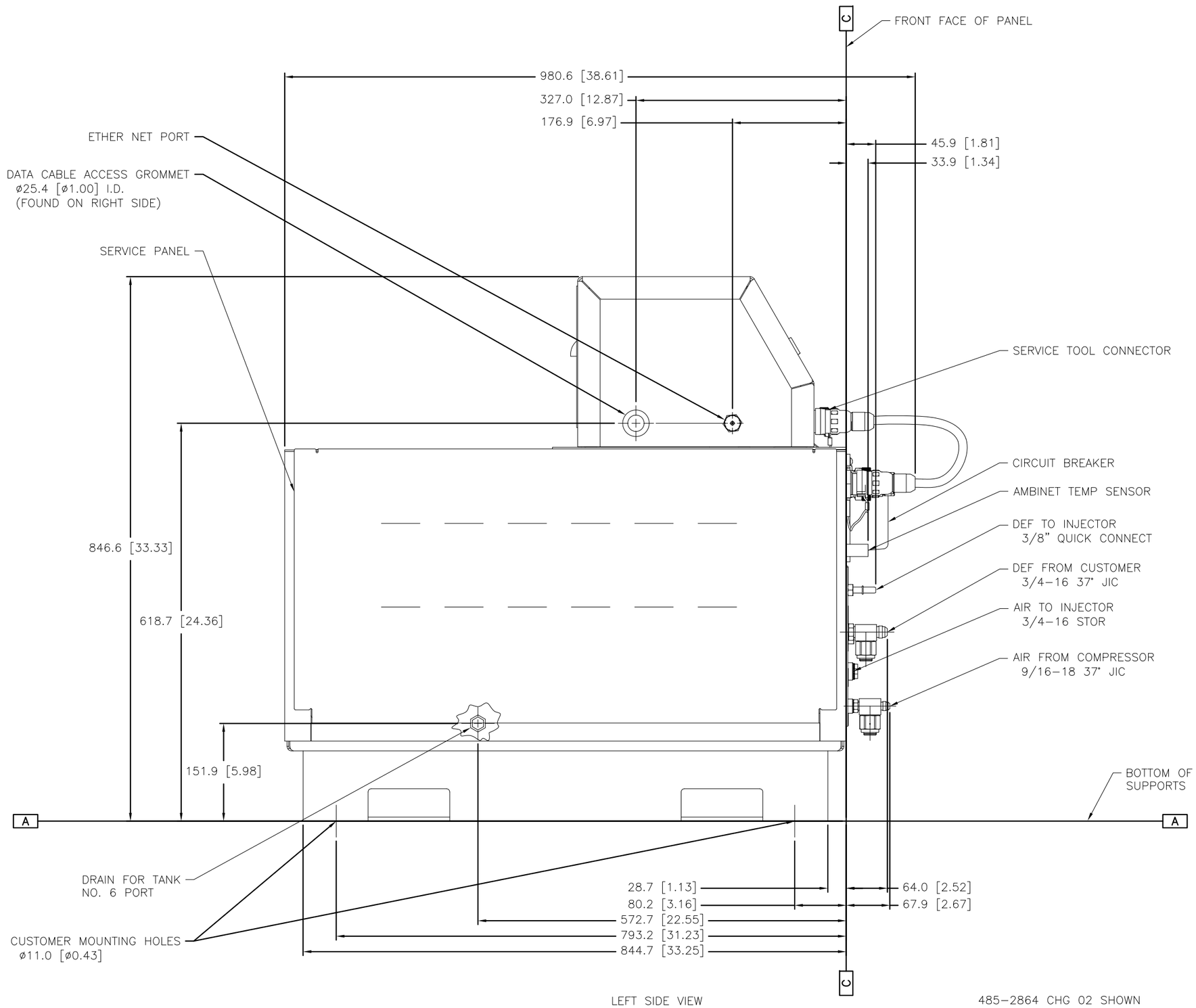

LEFT SIDE VIEW

485–2864 CHG 02 SHOWN

TITLE
INSTALLATION–ATTACHMENT
FIELD FIT DOSING CABINETS

11E2866 IDENT
11E2733 DRAWING–AUTOCAD
11E0129 WEBRAND MARKINGS
11E0013 CONFIDENTIALITY
11E0012A INTERPRETATION
11E0011 INTER & TOL

DRN J.A. HARTMAN
CHK C.A. THURMAN
APPR N.P. MOUNTJOY
SIZE X
SCALE 1 = 2
SHEET 2 OF 2
02 29NOV19
CATERPILLAR INC.
524–1873 – 1 WS16

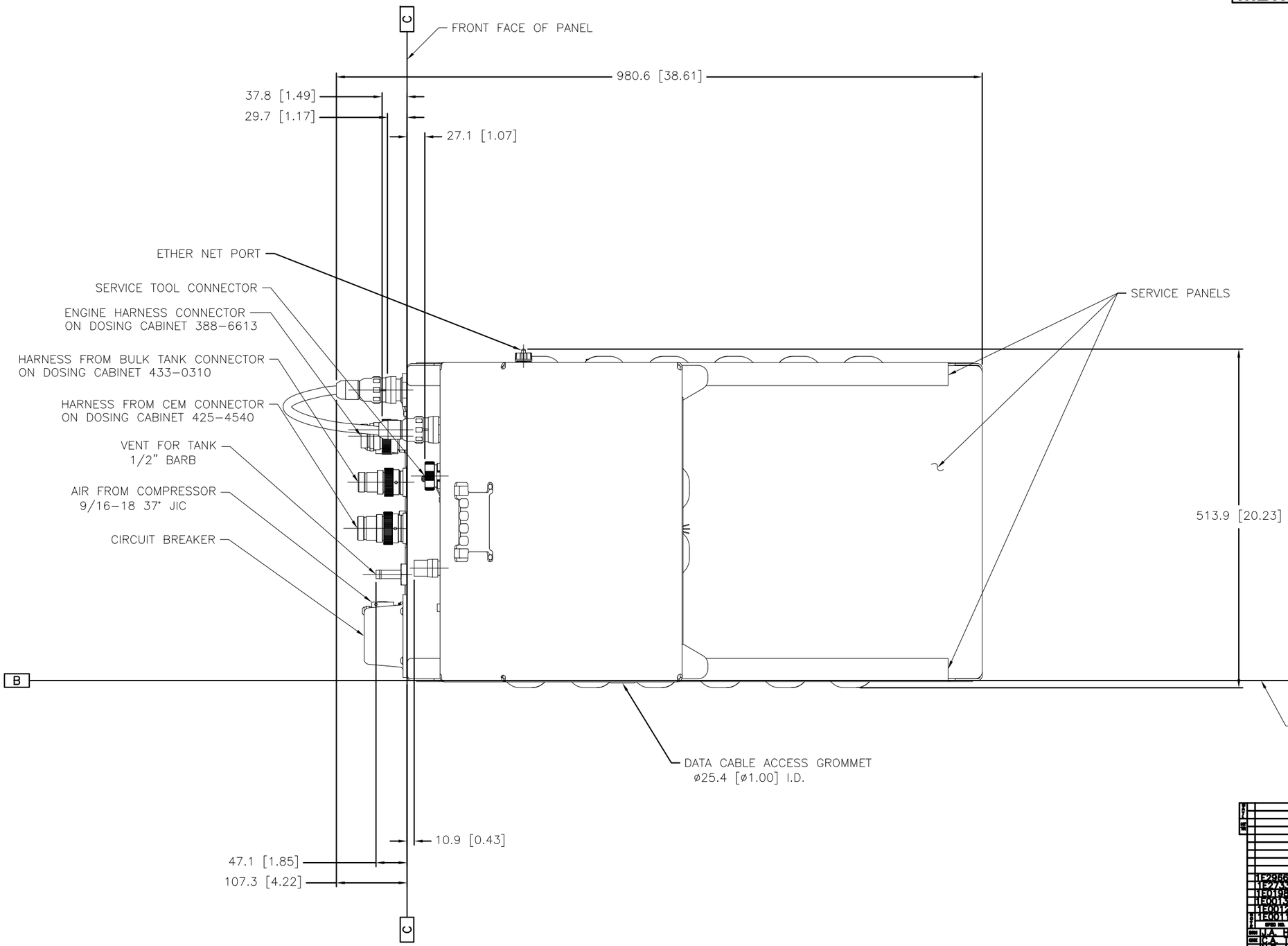

485–2864 CHG 02 SHOWN

1E2868	IDENT
1E2733	DRAWING–AUTOCAD
1E0129	BRAND MARKINGS
1E0013	CONFIDENTIALITY
1E0012	INTERPRETATION
1E0011	INTER & TOL

DRN U.A. HARTMAN
CHK C.A. THURMAN
APPR N.P. MOUNTJOY

SCALE 1 = 2
SHEET 3 OF 9
02 26NOV19

CATERPILLAR INC.

INSTALLATION–ATTACHMENT
FIELD FIT DOSING CABINETS

524–1873 – W516 E

Application &
Installation Guide

Retrofit SCR with Optional DOC or DPF Aftertreatment System

LEBE0035-07

The information contained in this supplement is confidential and proprietary to Caterpillar. Distribution of this material must be limited to personnel whose duties require knowledge of such material and is intended exclusively for their information and training. Distribution of this material for other purposes is strictly prohibited.

1.0 Introduction 5-10
Purpose 5
Product Scope 5
Safety 6
Electrical 7
Pressurized Air and Water 7
High-pressure Wash 7
Welding 7
Painting 7
Cleanliness 8
Replacement Parts 8
Fluid Recommendations 8
Terminology 10

2.0 Cat® Selective Catalytic Reduction (SCR) System Overview 11-15
Dosing System Operations 12
Piping and Instrument Diagram (P & ID) 13
Customer-supplied Installation Components 15
Initial Installation – Common Arrangement Serial Number 15

3.0 Cat CEM Interface Connections 16-50
Electrical Power 16
Air System 16
DEF System 17
DEF Handling 19
DEF Storage Tank 20
Lifting the Dosing Cabinet 23
Mounting of the Dosing Cabinet 23
Assembly of Cat® SCR System Components 25
Lifting the CEM 27
CEM Mounting Instructions 28
Connections to the Exhaust System 30
CEM Outlet Flange Capability to Support an Exhaust Stack 30
Dosing Cabinet 35
Dosing Cabinet Connection Points 36

3.0 Cat CEM Interface Connections (continued)
Installation of the DEF Injection Lance....37
DEF Injection Lance Lines Installation....38
Installation of CEM Sensor Boxes....40
CEM Electrical Harness Installation....44
Connection Points on the CEM Exhaust Inlet Sensor Box....47
Connection Points on the CEM Exhaust Outlet Sensor Box....48
CEM and Dosing Cabinet Component Overview....50

4.0 Cat CEM and Control System....51-60
CEM Control Power....51
Dosing Cabinet Terminal Strip Box....53
CEM Terminal Strip Box....54
CEM to Dosing Cabinet Jumper Harness....54
Panel Connection Tables....55
AC Power....57
DC Power....59
DEF Transfer Pump....59
Relay....60
Override Switch....60
Keyswitch....60

5.0 Cat CEM Communication Network....61-69
Control Panels and Displays....61
CDL Circuit....61
J1939 Circuit....62
Parameters....65
Diagnostics....67
Cat ET Configuration File Programming....68
Verifying Current Software Revision....69

6.0 Appendices....70-76
Appendix A – Serial Number Plate Locations....70
Appendix B – DEF Handling....72
Appendix C – Dosing Cabinet Symbols....74
Appendix D – Aftertreatment Commissioning Checklist....75

1.0 Introduction

Purpose

This document is a reference and guide for the correct installation of the retrofit selective catalytic reduction (SCR) system. The two main components of the system are the dosing cabinet and the reactor housing/ CEM (Clean Emissions Module). The primary purpose of this document is to assist engineers and designers specializing in engine installations. The Engine Application and Installation Guide and Engine Data Sheets complement this booklet.

Note: The information in this document is subject to change as engine exhaust aftertreatment systems are revised and improved as required for emission reduction standards.

Cat engines are designed and built to provide superior value; however, achieving the end user's value expectations depends greatly on the performance of the complete installation to assure proper function over the design life of the installation. This proper detail will allow the engine to produce its published rated power and fuel consumption and meet applicable emission standards.

Caterpillar exercises all reasonable effort to assure the engine and Cat CEM perform properly. However, it is the responsibility of the OEM/installer to properly install the engine and Cat SCR system. Caterpillar assumes no responsibility for deficiencies in the installation. It is the responsibility of the OEM/installer to meet all Caterpillar requirements as provided in this Application and Installation Guide.

When operating the engine with light loads, short operation cycles, excessive idling, or applications where normal operating temperatures are seldom reached, the catalyst could become clogged or loaded with unburned fuel, which will increase engine back pressure or damage the catalyst if sudden high load is applied to the engine. See operation section in OMM – M0075634 for operation information.

Caterpillar does not guarantee or approve the validity or correctness of any installation. Caterpillar's sole obligation with respect to any product is as set forth in the applicable Caterpillar warranty statement.

It is the installer's responsibility to consider and avoid possible hazardous conditions, which could develop from the systems involved in the specific engine installation. The suggestions provided in this guide should be considered general examples only and are in no way intended to cover every possible hazard in every installation.

The information in this document is the property of Caterpillar Inc. and/or its subsidiaries. Without written permission, any copying, transmission to others, and any use except that for which it is loaned is prohibited.

Contact the appropriate application support group for the latest information on Cat SCR system guidelines and requirements.

Product Scope

Common Arrangement Serial Number Prefix	SCR Catalyst Cassette Array	Catalyst Options
EH9	5x4x3	SCR Only -or- SCR+DOC -or- SCR+DPF
EH8	4x4x3	
EH7	4x3x3	
EH6	3x3x3	

Table 1.1 – CEM Size and Catalyst Options

Description	Standard Vs Optional
CEM	Standard
Dosing Control Cabinet	Standard
Dosing Control Cabinet – Display & Interface	Standard
Air/DEF Dosing Control Cabinet to CEM Connection	Standard
Electrical Terminal Strip Customer Interface – CEM	Standard
CEM Insulation Kit	Optional
DEF Transfer Skid	Optional
40 Micron DEF Filter (Remote Mount)	Optional
Asset IQ – (Mechanical Engine Interface	Optional

Note - Contact your Caterpillar Dealer for Details

Table 1.1 – CEM Size and Catalyst Options

Safety

Most accidents that involve product operation, maintenance, and repair are caused by failure to observe basic safety rules or precautions. An accident can often be avoided by recognizing potentially hazardous situations before an accident occurs. An OEM installer must be alert to potential hazards. An OEM installer should also have the necessary training, skills, and tools to perform these functions properly.

The information in this publication was based upon current information at the time of publication. Check for the most current information before you start any job. Cat dealers will have the most current information.

WARNING

Improper operation, maintenance, or repair of this product may be dangerous. Improper operation, maintenance, or repair of this product may result in injury or death. Do not operate or perform ny maintenance or repair on this product until you have read and understood the operation, maintenance, and repair information. Burns and fire hazards are possible. Failure to properly connect the aftertreatment and properly route the exhaust gases away from the module may result in personal injury or death.

Caterpillar cannot anticipate every possible circumstance that might involve a potential hazard. The warnings in this publication and on the product are not all-inclusive. If a tool, a procedure, a work method, or an operating technique that is not specifically recommended by Caterpillar is used, you must be certain that it is safe for you and for other personnel. You must also be certain that the product will not be damaged or made unsafe.

WARNING

Before performing any work on the dosing cabinet, make sure electrical supply lines are de-energized and compressed air and diesel exhaust fluid lines are shut off and drained. Wear proper safety gear (glasses or goggles, hard hat, steel-toed shoes, safety vest, long pants and sleeves, etc.) when installing any part of the Cat CEM system.

Electrical

This safety message is located on the side panels of the dosing cabinet: Do not operate or work on this product unless you have read and understand the instructions and warnings in the Operation and Maintenance Manual (OMM). Failure to follow the instructions or heed the warnings could result in injury or death. Contact any Cat dealer for replacement manuals. Proper care is your responsibility.

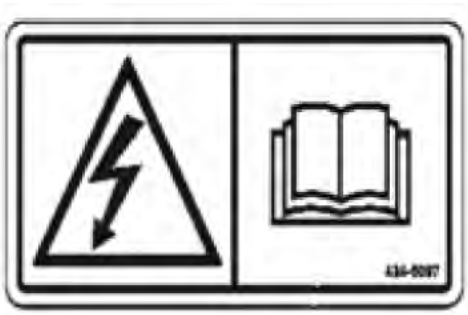

Pressurized Air and Water

Always wear approved personal protective equipment (PPE) when cleaning components with pressurized air or water. The maximum air pressure for cleaning purposes must be reduced to 205 kPa (30 psi) when the air nozzle is deadheaded and used with effective chip guarding (if applicable) and PPE. The maximum water pressure for cleaning purposes must be below 275 kPa (40 psi).

High-pressure Wash

NOTICE

High-pressure wash systems, including high-pressure spray washers and water cannons, are now in frequent use by maintenance personnel. Connector seals will fail when hit directly with high-pressure spray. Many connection systems have adapters available that can be attached to the back of the connector to protect the wire seals from direct high-pressure wash. Where direct exposure to high- pressure wash systems cannot be avoided, protective shields will need to be designed and installed. For the benefit of service, connectors should be placed in accessible locations.

Welding

NOTICE

Welding on a Cat CEM is not recommended. If welding is required, follow ECM protection guidelines for all ECMs on the installation: sensor boxes, dosing cabinet, and engine ECMs are all included. If welding is required, all materials must be compatible with 409 stainless steel. Any attachment must not affect the thermal expansion of the CEM. Failures as a result to adding attachments is not warrantable.

Painting

Painting of the Cat CEM Reactor is NOT recommended and is strongly discouraged. Skin temperatures on the CEM body can reach as high as 500°C (977°F) during operation and will cause charring or burning of the paint. Because the module is constructed using 409 stainless steel, it will develop surface discoloration and an oxidation layer during normal use.

Cleanliness

Air lines and DEF lines that connect to the CEM, dosing cabinet, or engine should meet Caterpillar cleanliness specifications contained in the A&I guide LEBW0019 Flushing and Cleaning of System Piping, Cleanliness Group B.

Replacement Parts

WARNING

When replacement parts are required for this product, Caterpillar recommends using genuine Caterpillar replacement parts or parts with equivalent specifications. This includes, but is not limited to, physical dimensions, type, strength, and material. Failure to heed this warning can lead to premature failures, product damage, personal injury, or death.

Fluid Recommendations

Refer to the specific OMM for the engine model being utilized with the retrofit SCR system for the proper fuel, lubricants, and coolants compatible with that engine. The proper fuels, lubricants, and coolants must be used to enable the engine to produce its published rated power, fuel consumption, and emission output. If the engine is not operating properly, the afterteatment system may not meet tail pipe emissions targets or, in some cases, may be damaged.

In addition to the engine OMM, refer to Table 1.2, which details fluid requirements for the individual catalyst types.

Typical diesel applications utilize vanadia SCR. Copper zeolite catalyst is reserved for very high exhaust temperatures, particularly in gas applications.

JP8 fuel is not compatible with Cat SCR systems.

NOTICE

Oils that have more than 1% total sulfated ash should not be used in aftertreatment device-equipped engines. To achieve expected ash service intervals, performance, and life, particulate filter-equipped diesel engines require the use of Cat DEO-ULS™ or oils meeting the Cat ECF-3 specification and the API CJ-4 oil category. Oils that meet the Cat ECF-2 specification and that have a maximum sulfated ash level of 1% are also acceptable for use in most aftertreatment-equipped engines. Use of oils with more than 1% total sulfated ash in particulate filter-equipped engines will cause the need for more frequent ash service intervals and/or loss of performance. Refer to your engine-specific OMM and your aftertreatment OMM for additional guidance.

Engine Operating Fluids by Catalyst Design		
Fuel Tolerance – Sulfur (ppm)	DPF	15 or less
Fuel Tolerance – Sulfur (ppm)	Copper Zeolite SCR	50 or less
Fuel Tolerance – Sulfur (ppm)	DOC	500 or less
Fuel Tolerance – Sulfur (ppm)	Vanadia SCR	1000 or less
Oil Tolerance (ash content)	All Catalyst	CJ4 or better
Fuel Tolerance – Biofuels (ASTM 6751-075 B100)	All Catalyst	B20 or less
NOx Sensors Replace at 9000 hrs – 15 ppm Sulfur Diesel Fuel		
NOx Sensors Replace at 3000 hrs – 1000 ppm Sulfur Fuel		

Table 1.2

NOTICE

Use of Oil Renewal System (ORS) is strictly forbidden. Any ORS that extends the oil life through the combustion process and topping off the oil reservoir with new oil will damage the aftertreatment device. Failures that result from the use of any oil are not Caterpillar factory defects. Therefore, the cost of repair would NOT be considered by the Caterpillar warranty for materials and/or the warranty for workmanship.

Note: The CEM system should only be used with a properly applied and maintained engine. Excessive slobber (oil in the exhaust caused by extended low-power operation or poorly maintained piston rings) may result in poor performance and impact the system's warranty. The engines must operate within the maintenance and performance standards of the engine manufacturer.

READ THROUGH THE ENTIRE MANUAL
BEFORE PROCEEDING WITH ACTUAL INSTALLATION.

Terminology

Terminology used in this document:

ASFT	Aftertreatment System Functional Test
AT	Aftertreatment
AUS	Aqueous Urea Solution
AWG	American Wire Gauge
BPV	Back Pressure Valve
CAN	Controller Area Network
CDL	Cat Data Link
CEM	Clean Emissions Module
CG	Center of Gravity
CO	Carbon Monoxide
DEF	Diesel Exhaust Fluid (also referred to as AUS32)
Delta P	Differential Pressure
DPF	Diesel Particulate Filter
DOC	Diesel Oxidation Catalyst
DPI	Delta Pressure Indicator
ECM	Electronic Control Module
EDDC	Engine Drawing Design Center
EH&S	Environment of Health & Safety
EMCP	Electronic Modular Control Panel
EPA	Environmental Protection Agency
GFCI	Ground-Fault Circuit Interrupter
GND	Ground
HC	Hydrocarbons
MSDS	Material Safety Data Sheet
NC	Normally Closed
NO	Normally Open
NOx	Nitrogen Oxides – NO and NO_2
NVM	Non-volatile Memory
OC	Oxidation Catalyst
OEM	Original Equipment Manufacturer
OMM	Operation and Maintenance Manual
ORS	Oil Renewal System
PETU	Pump, Electronics, Tank Unit (Control Cabinet)
PM	Particulate Matter
P/N	Part Number
PPE	Personal Protective Equipment
PSI	Pounds per Square Inch
SCR	Selective Catalytic Reduction
SOTA	Systems Operation Testing and Adjusting
TMI	Technical Marketing Information
ULSD	Ultra Low Sulfur Diesel Fuel

2.0 Cat Selective Catalytic Reduction (SCR) System Overview

The primary function of the SCR system is to actively reduce nitrogen oxides (NOx) which are a normal by-product of internal combustion engines. Selective catalytic reduction is a process in which NOx reacts selectively with second compound across a catalyst where it is chemically reduced into harmless nitrogen and water. The retrofit SCR system uses diesel exhaust fluid (DEF) as the second compound, specifically the ammonia portion of DEF.

The SCR system may combine SCR technology with oxidation catalysts or particulate filters (Figure 2.1) that reduce particulate matter (PM), hydrocarbons (HC), and carbon monoxide (CO) as well as NOx.

The two main components of the SCR system are the stainless-steel reactor housing (CEM) and a dosing cabinet with a control module.

The stainless-steel reactor housing contains SCR catalysts, a DEF injection system, and a mixing section, and may contain oxidation catalysts or diesel particulate filters.

Exhaust flows into the CEM through the inlet tube and then through the oxidation catalyst or diesel particulate filter (if equipped). Here, CO and HC are oxidized into water (H_2O) and CO_2. PM is reduced as well, being trapped and oxidized into CO_2. Exhaust then flows into a mixing chamber, where DEF is injected into the exhaust stream in precise amounts, vaporized, and thoroughly integrated into the exhaust stream where it decomposes into ammonia (NH_3) and CO_2, the NH_3 being the reactant needed for the SCR process. The NH_3 in conjunction with the SCR catalyst converts the NOx to harmless nitrogen (N_2) and H_2O. The treated exhaust then exits the module via the outlet flange.

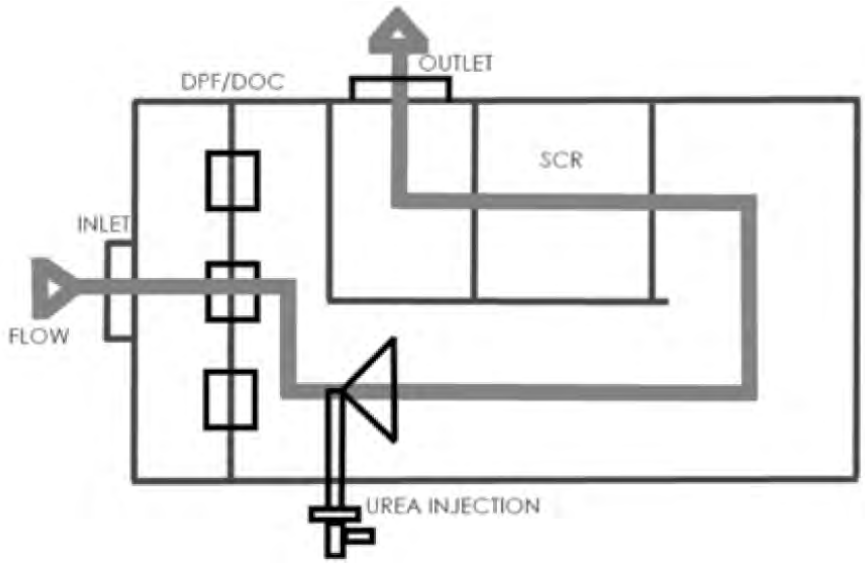

Figure 2.1 – Exhaust Flow Through a Typical Retrofit CEM

Dosing System Operations

The control system consists of a dosing cabinet equipped with a programmable electronic controller, a DEF dosing pump, a compressed air regulation system, sensor kits for monitoring engine exhaust backpressure, exhaust temperature, and exhaust NOx levels, and a CAN A (J1939) data link to communicate with the engine and CAN B (J1939) to communicate with the CEM. As shown in Figure 2.2, air pressure must be present at the input to the dosing cabinet before dosing can begin. The system controller monitors various inputs during operational cycles. The system controller first checks compressed air system pressure at 200 rpm on engine start up (Table 2.1). If the air pressure meets specifications, an enable signal is logged in the system controller. Another enable signal is set when the exhaust temperature (CEM inlet) reaches 195°C. The dosing pump will prime and wait until the exhaust temperature reaches 300°C then dosing will commence. Favorable DEF temperatures are listed in Table 2.1.

The air pressure supplied to the nozzle is regulated to 441 kPa ± 28 kPa (64 psi ± 4 psi) and passes through the solenoid valve #1. (See air manifold adjustment procedure in Appendix D.) When dosing requirements are met, solenoid valve #1 is energized, and the pressure sensor (P1) monitors the system air pressure. If the required air pressure is present, solenoid valve #2 is energized to close, and DEF will flow to the injector, installed in the CEM, through the DEF line from the dosing cabinet.

System Operational Requirements		
Input	**Data Point**	**Data Point**
CEM Inlet Temperature	>195°C (383°F)	Enable Dosing – pump primed and ready to dose DEF
CEM Inlet Temperature	>300°C (572°F)	Controller commences dosing DEF
DEF Temperature	-11°C to 35°C	DEF temperature best between -11°C and 35°C (95°F)
Compressed Air Supply	586 kPa (85 psi)	Controller checks air pressure at 200 engine rpm during start-up

Table 2.1 – Operational Requirements

The DEF dosing pump pulses fluid from the buffer tank to the CEM injector as a result of the closed loop operation cycle monitored and controlled by the dosing cabinet controller. The dosing action will continue while the SCR system operational requirements are being met (Table 2.1). When the system temperature drops below the minimum level or the engine is shut down, a purge cycle is initiated to purge the DEF lines, diminishing the chance of DEF crystallizing and plugging the lines and injector components.

Purging is accomplished by energizing solenoid valve #1 and de-energizing solenoid valve #2, directing compressed air back through the DEF line to the buffer tank via solenoid valve #2 then venting to an approved DEF container (Figure 2.2). The purging operation will continue until the exhaust outlet temperature reaches 195°C, requiring compressed air during the entire purge cycle. The duration of the purge cycle requires the air compressor to be powered continuously by grid power or backup power.

Note: Air pressure and 24VDC power to the dosing control cabinet must be maintained during engine operation and until the purge cycle is complete. AC power is required only during engine operation; it is not required during the shutdown purge cycle.

The DEF fill to the buffer tank, which is mounted in the dosing cabinet, is controlled by the dosing cabinet controller. When the buffer tank fluid level is lowered and the DEF level sensor detects a low-level condition, the dosing cabinet controller enables a transfer pump relay (Figure 4.8 and Figure 4.9) and energizes solenoid valve #3 (Figure 2.2), which fills the buffer tank to maintain an adequate supply of available fluid. The maximum DEF pressure allowed at the input to solenoid valve #3 is 10 psi. The appropriate range of DEF pressure and flow rate is 5 to 10 psi and 1.25 to 2.5 gallons per minute respectively. A 10-psi maximum pressure relief valve is recommended in series with the DEF supply tank (Figure 2.2).

YC/KW/MECH: Factory provided air compressor system. Please verify the operational set point for pressure.

confirmed pressure of 85PSI as listed

YC/KW/MECH: Please indicate which parts are factory provided and installed; which parts are contractor provided and installed.

Piping and Instrument Diagram (P & ID)

See below and attached

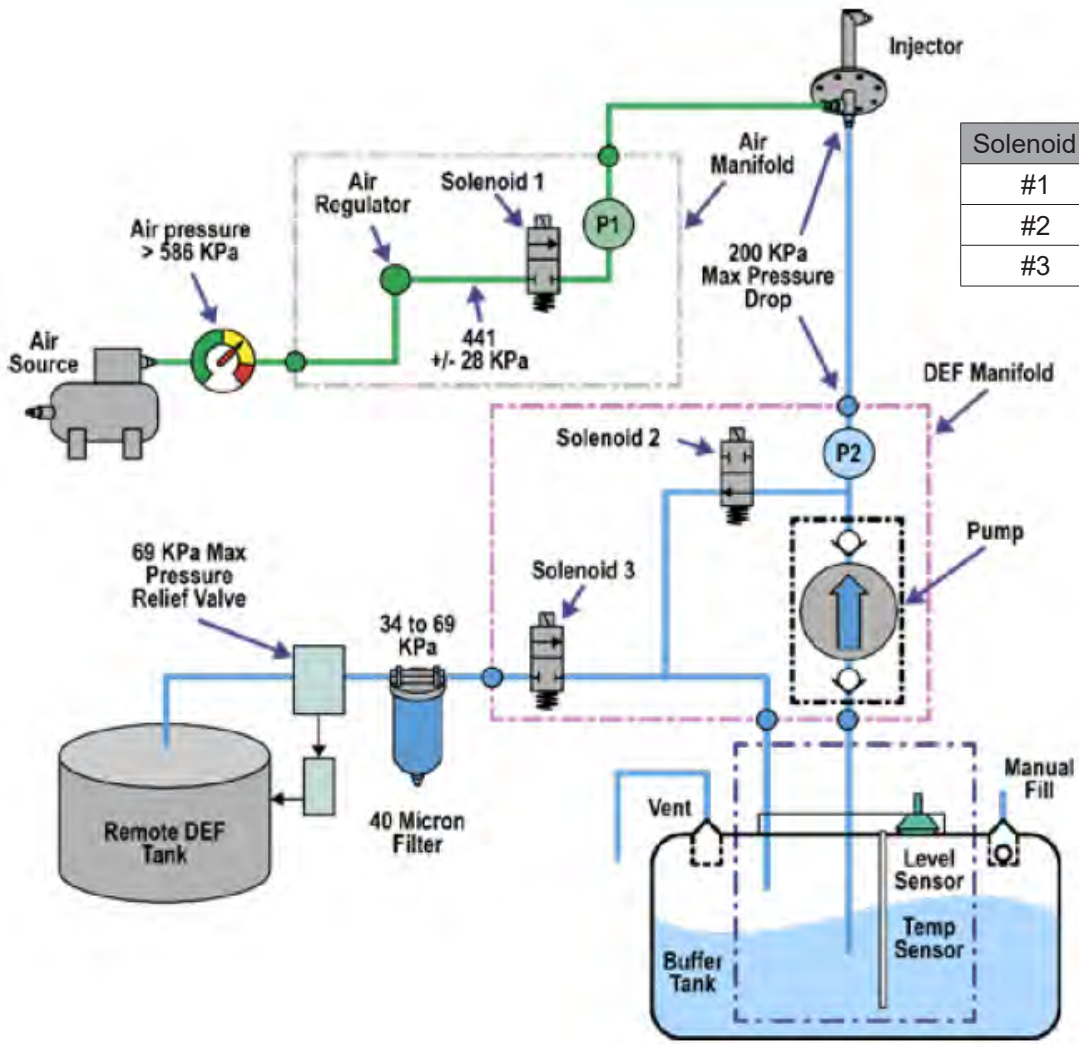

Solenoid #	Static state
#1	NC
#2	NO
#3	NC

Figure 2.2 – CEM System

Note: The DEF vent port must have a vent line installed to route buffer tank fumes to meet regulatory guidelines for ammonia fumes and the following routing requirements:

- DEF vent line exit must be below DEF injector.
- Vent line must have a drain line routed back to a storage tank or a regulatory approved waste container in the unlikely event of buffer tank overfill and return flow of DEF during purge cycle.
- DEF vent line must be routed continuously upward away from vent port without kinks, loops, or mechanical components that could create a blockage.
- DEF vent line exit must be equipped with a filter/breather with a 40-micron element.

Piping and Instrument Diagram (P & ID)

REV4.YC/KW: Provide updated P&ID and show a clear scope of work.

All are provided by Carter/Tomball.

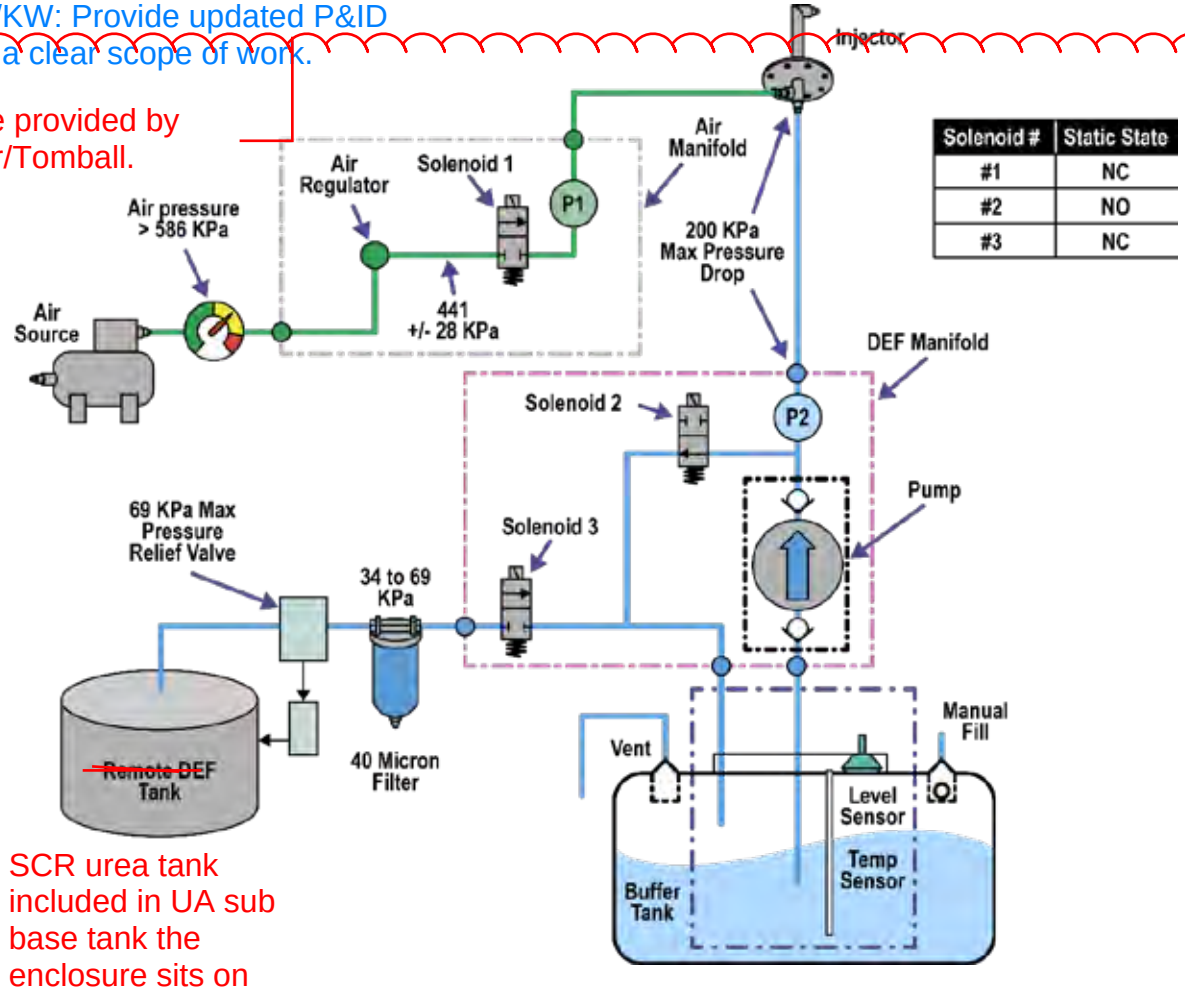

Solenoid #	Static State
#1	NC
#2	NO
#3	NC

SCR urea tank included in UA sub base tank the enclosure sits on

Figure 2.2 – CEM System

Note: The DEF vent port must have a vent line installed to route buffer tank fumes to meet regulatory guidelines for ammonia fumes and the following routing requirements:

- DEF vent line exit must be below DEF injector.
- Vent line must have a drain line routed back to a stora in the unlikely event of buffer tank overfill and return t
- DEF vent line must be routed continuously upward aw mechanical components that could create a blockage
- DEF vent line exit must be equipped with a filter/breat

REV3. YC/KW: Please update this diagram layout since air compressor, DEF storage tank and piping accessories are all come from generator enclosure. Installing contractor are only responsible for following,
1. Connecting the def and compressed air pipe outside the enclosure to the SCR unit
2. Providing DEF fill connection between fill station and the generator enclosure DEF intake port.
3. Providing heat trace over DEF outside of the enclosure.

Updated below

YC/KW REV02: Please confirm DEF storage tank, air compressor, piping accessories comes with generator enclosure and to be factory provided and installed.

Confirmed, all internal parts are installed and provided.

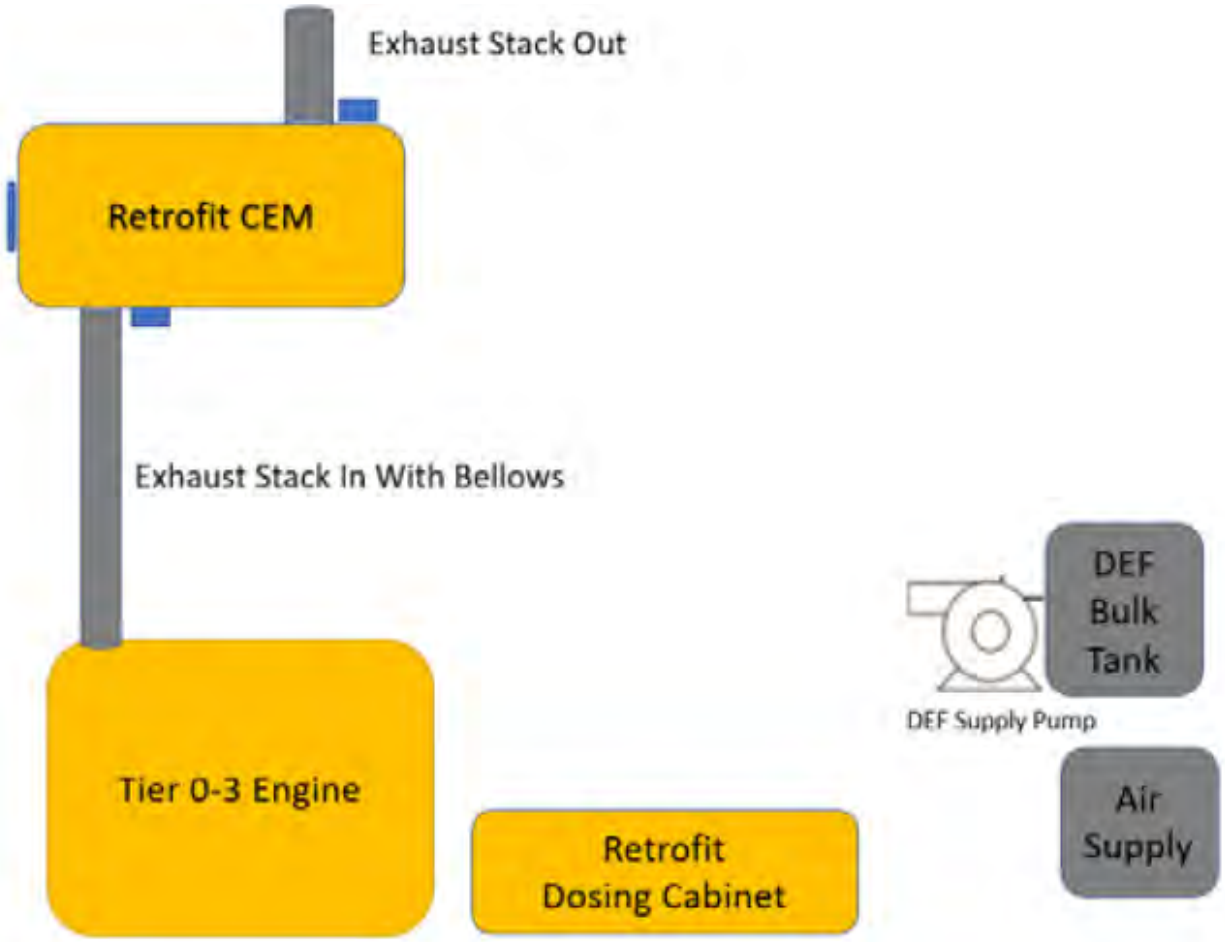

Figure 2.3 – Typical Retrofit Aftertreatment System Components Arrangement

Note: Mechical Engines

Most Caterpillar Electronic engines will have the signals listed below, however mechanical and some older electronic engines may not. In that case the following list applies.

Customer's engine needs to have the following channels on J1939/CAN-A:

- Engine Speed (RPM)
- Engine Fuel Rate
- Engine Inlet Manifold Air Temp (IMAT)
- Engine Inlet Manifold Air Pressure (IMAP)
- Barometric Pressure (Baro)
- If these signals are not available, use optional Asset IQ which will provide engine sensors and communication to the aftertreatment ECM. The required kit is available via the parts system. Reference publication: REHS9785. Consult your Caterpillar dealer for more information.

Customer-supplied Installation Components

see above

Customer's engine needs to have the following channels on J1939/CAN-A:

- Engine Speed (RPM)
- Engine Fuel Rate
- Engine Inlet Manifold Air Temp (IMAT)
- Engine Inlet Manifold Air Pressure (IMAP)
- Barometric Pressure (Baro)

YC/KW/MECH: Please show which items are factory provided and which items are contractor provided.

The following components will be supplied by the customer or installer (Figure 2.3).

- DEF storage tank
- DEF transfer pump and pressure relief valve (where applicable)
- DEF supply line 40-micron filter (Refer to (See DEF Supply Requirements at Dosing Cabinet Inlet Table for more details) for more details)
- Compressed air source for dosing cabinet air assist
- AC electrical supply for the dosing cabinet power
- A 24VDC power harness from primary DC power source to dosing cabinet junction box
- Global CAN A (J1939 harness) from the engine controller to the dosing cabinet junction box
- Electrical jumper harness between CEM terminal strip and dosing cabinet terminal strip boxes
- Air piping from the compressed air source to the dosing cabinet
- DEF piping or tubing from bulk storage to the dosing cabinet including a pressure relief valve
- Vent line tubing and associated components
- Exhaust piping from turbo outlet to CEM inlet (inclusive of applicable flexible coupling)
- Exhaust piping from CEM outlet (inclusive of applicable flexible coupling)
- CEM support frame

Initial Installation – Common Arrangement Serial Number

Important: As supplied from the factory, the dosing cabinet and CEM are serialized together under one product common arrangement – AFTM. When installed, the common arrangement – AFTM serial number of the CEM and of the dosing cabinet must match. If the two components are not paired correctly, a fault code will be activated. The common arrangement – AFTM serial number can be found on the CEM to the left or right of the SCR catalyst access hatch. The corresponding common arrangement – AFTM dosing cabinet-mounted serial number plate is just off-center of the dosing cabinets front connection face. The common arrangement – AFTM part number, serial number, and config group must all match in order that the system work correctly. If the labels do not match, contact your dealer for assistance.

Note: The common arrangement 8-digit serial number should be referenced when contacting your Cat dealer for service in addition to the engine serial number. This action will indicate to the Cat dealer that there is an aftertreatment unit installed in addition to the engine and allow the dealer to work effectively to address your service needs. There may be other serial numbers present on the CEM and dosing cabinet; these are for manufacturing only and will most likely be 10 digits in length.

Figure 2.4 – Dosing Cabinet and CEM Common Arrangement Identification Plate Examples

3.0 Cat CEM Interface Connections

Electrical Power

The standard retrofit SCR system dosing cabinet requires a 100/240-50/60 Hz VAC 15A electrical connection to the AC terminal strip inside the cabinet (Figure 4.5) and should be powered from a dedicated GFCI circuit.

The dosing cabinet must be installed per national and local electrical codes. Electrical conduit or similar devices should not be fastened to the side wall or top panels of the cabinet. The cabinet must not be used for the routing of external electrical circuits that are not part of the CEM electrical system.

The dosing cabinet is equipped with a dosing pump and EMI filter that will operate from 100/240-50/60 Hz VAC single-phase electrical power (L1 -Common-Ground) (Figure 4.5). The cabinet mounted programmable controller and system sensors are powered by the engine 24VDC power system.

Air System

Clean dry compressed air is used:

- To assist in the atomizing of the liquid DEF as it is injected into the exhaust stream.
- To shield the liquid DEF in the injector from the exhaust heat until injection to prevent crystallization, which could plug the injector nozzle.
- To purge the DEF line during shutdown to prevent crystallization.

Dosing Cabinet Air Supply	
Air quality (-40°C minimum air temp)	ISO 8573-1:2010 [5:2:X] (X=25 mg/m^3)
Air quality (3°C minimum air temp)	ISO 8573-1:2010 [5:4:X] (X=25 mg/m^3)
Air temperature	-40°C to 50°C (-40°F to 122°F)
Air flow	0.28 m^3/min (10 SCFM)
Air Consumption (Operational States)	Continuous during engine operation, purge, and after shutdown
OEM Supplied Operational Air Pressure (Measured at dosing cabinet air strainer inlet)	724-1068 kPa (105-155 psi)
Internally regulated system air pressure target (pressure used for system diagnostics)	448 ± 27 kPa (65 ± 4 psi)
Air pressure at start-up	Aftertreatment ECM will activate low air pressure alarm ONLY after CEM inlet temperature reaches a temperature threshold – AND – system internally regulated pressure is <375 kPa. Alarm will de-activate once pressure is >375 kPa.
Purge air pressure at shutdown (purges back to buffer tank)	>482 kPa (70 psi) for 180 sec
Maximum airline pressure drop from dosing cabinet to lance	6.89 kPa (1 psi)
Coalescing filter/separator – min rating (OEM supplied)	90% efficient pressure: 1069 kPa (155 psi)
Flow: 0.85 m^3/min (30 SCFM)	

Table 3.1 – Air Supply Requirements at Dosing Cabinet Inlet

Typically, compressed air will carry some oil from the compressor and some sediment from the piping. This debris can collect in the DEF injection nozzle and clog the unit. Use a coalescing air filter/separator that meets the requirements listed in Table 3.1.

Note: Water in the compressed air supply may allow ice crystals to form, which may cause damage to system components or temporarily impede the operation of the system. For applications which will encounter freezing temperatures, it is recommended to utilize an air supply that meets ISO 8573-1:2010 [5:2:X] (X=25 mg/m^3). For non-freezing applications, ISO 8573-1:2010 [5:4:X] (X=25 mg/m^3) is acceptable.

YC/KW/MECH: Are we providing heat tracing or similar heat protection for urea piping inside generator enclosure and urea piping between CEM and dosing cabinet?

DEF System

Overview

Diesel exhaust fluid is a relatively inexpensive urea solution that enables Cat engines equipped with SCR to reduce NOx emissions. DEF is a colorless liquid made up of high-purity urea and deionized water.

insulation and tracing inside enclosure to be provided

DEF Selection

For retrofit SCR applications, the required DEF solution must meet ISO 22241-1 (DEF 32.5%) or ISO 18611 (DEF 40%). Consult Caterpillar publication SEBU6251 for additional details. These standards are designed around DEF solutions of approximately 32.5% and 40% concentrations.

NOTICE

Do not use agriculture grade urea solutions. Do not use any fluids that do not meet ISO 22241-1 requirements in SCR emissions reduction systems. Use of these fluids can result in numerous problems, including damage to SCR equipment and a reduction in NOx conversion efficiency.

The advantage of 32.5% concentration is that it provides the lowest possible freezing point, -11°C (12°F), while 40% concentration freezes is at 0°C (32°F). The 40% solution, having a higher concentration, has the advantage of using less DEF per the amount of fuel used and potentially a smaller main DEF tank design.

DEF	32.5%	40%
Freezing Point	-11°C (12°F)	0°C (32°F)

Table 3.2 – DEF Freezing Temperatures

The quality of DEF rapidly degrades when stored at high temperatures. The ideal storage temperature for DEF is shown below. DEF that is stored above 35°C (95°F) for longer than one month must be tested before use.

Refer to ISO 22241 and ISO 18611 for the most updated information storage temperature information.

Expected DEF Life	32.5% DEF Storage Temperature	40% DEF Storage Temperature
Ideal Storage Temperature	-9°C to 25°C (15°F to 77°F)	2°C to 25°C (36°F to 77°F)
18 Months	Below 25°C (77°F)	
12 Months	25°C to 30°C (77°F to 86°F)	
6 Months	30°C to 35°C (86°F to 95°F)	
1 Month – Test Before Use	Above 35°C (95°F)	

Table 3.3 – DEF Expected Life Based on Storage Temperature

Changes in DEF concentration can occur for a variety of reasons, including evaporation of water, degradation of urea, or contamination. Caterpillar offers two refractometers for concentration testing, a Brix Digital (360-0774) and an Analog Refractometer (431-7087).

Figure 3.1 – Cat Brix & Analog Refractometer Offerings, 360-0774 and 431-7087

DEF is typically colorless and clear. A visual inspection should also be performed as any changes in color and clarity indicate a change in quality.

For DEF testing procedures, consult the Retrofit SOTA manual M0070376 available from your Cat dealer.

Material Selection for DEF
Material compatibilities must be considered in the DEF storage and delivery system due to the caustic, corrosive nature of the liquid. Refer to ISO 22241 and ISO 18611 prior to any material selection.

Recommended Materials Include:
- Stainless Steel (304, 304L, 316, 316L, 409, 439)
- Highly alloyed austenitic Cr-Ni and Cr-Ni-Mo steels
- Titanium
- Polyethylene
- Polypropylene
- Polyisobutylene
- Perfluoroalkoxyl alkane (PFA)
- Polyfluroethylene (PFE)
- Polyvinylidenefluoride (PVDF)
- Polytetrafluroethylene (PTFE)
- Teflon (PFA)

Seal/Hose Materials:
- Ethylene propylene diene monomer (EPDM) rubber
- Nitrile rubber (NBR)

Non-recommended Materials Include:
- Unalloyed steel
- Galvanized steel
- Aluminum/aluminum alloys
- Magnesium
- Copper
- Brass
- Metals and plastics coated with nickel
- Non-ferrous metals and alloys (copper, copper alloys, zinc, and lead)

DEF Dosing Cabinet Supply
The dosing cabinet requires a 40-micron DEF filter (not included with system) to be installed prior to the dosing cabinet inlet. This filter must have a maximum particle size of 40 microns and have a 99.9% or higher efficiency (Beta =1000) at 40 microns or smaller. Filtration in alignment with the cleanliness recommendation in SEBU6251 is encouraged. The filter needs to be able to handle a minimum of 9.5 L/min (2.5 gal/min).
The DEF filter/screen should be installed as close as possible to the inlet port of the dosing cabinet utilizing isolation valves to minimize DEF spillage while servicing the filter. DEF filtration parts are available through Cat dealers.

DEF Supply	
DEF quality	ISO 22241/ISO 18611
Dosing Cabinet inlet buffer tank refill pressure	5-10 psi
Required filtration	40 microns*
Required DEF Filter Efficiency	99.9 @ 40 microns*
Operating temperature (32% DEF)	-9°C to 35°C (15°F to 95°F)

*Cat DEF Filter P/N 491-6779 meets these requirements. Work with your Cat dealer regarding availability of this filter for your application.

A DEF filter Installation drawing can be found in the Engine Drawing Design Center (EDDC) by searching for P/N 491-6779.

Table 3.4 – DEF Supply Requirements at Dosing Cabinet Inlet

DEF Handling

DEF is a colorless liquid with a slight ammonia (pungent) odor.

Note: Consult the Material Safety Data Sheet (MSDS) provided by your DEF supplier.

DEF should be transported at -5°C to 25°C (23°F to 77°F). All fluid transfer equipment and intermediate containers should be used exclusively for DEF and should not be reused for other fluids such as coolants, oils, windshield washer fluid, etc. Ensure that transfer equipment is made from recommended materials. Hoses and other non- metallic transfer equipment made from NBR, Fluoroelastomer (FKM), and/or EPDM are recommended.

Numerous suppliers of DEF transfer equipment exist. Filtering DEF as it is dispensed is recommended. Filters should be compatible with DEF and should be used exclusively with DEF. Check with the filter supplier to confirm compatibility with DEF before using. Mesh-type strainers using compatible metals, such as stainless steel, are recommended. Paper (cellulose) media and some synthetic filter media may degrade during use. Contact your local Cat dealer for assistance with sourcing DEF filtering units and filters.

Spills and leaks: Take care when dispensing DEF. Spills should be cleaned immediately, and vehicle surfaces should be wiped clean and rinsed. Use caution when dispensing DEF near an engine that has recently been running. Spilling DEF onto hot components will cause it to vaporize, which can be harmful.

Due to the corrosive nature of DEF, the condition of hoses and other non-metallic components should be monitored for signs of degradation. DEF leaks are easily recognizable by white urea crystals that accumulate at the site of the leak. Solid urea can be very corrosive to galvanized or unalloyed steel, aluminum, copper, and brass, so leaks should be fixed immediately to ensure no damage to surrounding hardware.

A 40 percent DEF solution has more urea per unit of volume than the 32.5 percent solution. However, the 40 percent solution freezes at a higher temperature of 0.5°C (33°F). The 40 percent DEF will also come out of solution (salt out) through freezing, which could plug the SCR catalyst.

DEF is corrosive. Do not store DEF in a tank or use supply lines or supply pumps that are made of the following materials: aluminum, brass, or steel. Use only corrosion-resistant materials such as PVC or stainless steel. Any O-rings must be EPDM. DEF must be kept below 50°C (122°F) to delay decomposition.

DEF Storage Tank

The end user or installer must provide a DEF main storage tank and delivery system. The tank manufacturer or installer must provide a means to sample DEF in the tank to determine DEF quality.

DEF storage tanks must be designed to industry best practices, following all local regulations for fluid storage tanks, but also with consideration for DEF freezing and effective thawing with a heat exchanger. Unlike other common operating fluids such as diesel fuel and coolant, DEF freezes at a temperature within the operating limits of the engine.

Bulk tank breathers should be fitted with filtration to keep airborne debris from entering the tank. Desiccant breathers should not be used because water will be absorbed, which potentially can alter DEF concentration. Appropriately vent indoor tanks. Plan for control of overflow of the tank.

DEF in the tank freezes from the outside to the center. The density of frozen DEF is lower than the density of the liquid DEF. This means that the frozen DEF floats on the liquid DEF. To ensure that the complete tank of DEF is thawed, at least part of the heating source must be located at the bottom of the tank. The DEF pick-up location needs to be very close to the heating source and draw from the bottom of the tank as well. As the DEF is consumed, the DEF level in the tank reduces and the cold DEF approaches the heater. Tank shapes vary from application to application based on design and space limitations. Irregularity in these shapes is acceptable if air pockets and/or chunks of frozen DEF embedded in tank ridges or other contours of the tank can be avoided. It is also preferable to have the width of the tank equal to or smaller than the height of the tank. Short and long tanks are not favorable for DEF freeze protection.

Tank Volume

Tank volume should be sized based on required refill frequency, DEF freeze expansion, and the volume of internal tank components. Also consider the regulatory implications of running out of DEF before running out of fuel, particularly if infrastructure is not in place to fill both fuel and DEF tanks at every location. Tank sizes will depend on operating profile and anticipated normal fueling locations. DEF tanks must be sized such that sufficient DEF is always available to adequately operate the SCR system. The amount of DEF usage can be reasonably estimated as a direct fraction of the engine fuel burn. The DEF tank should then be sized to accommodate the requisite fraction of DEF as outlined in the following DEF Bulk Tank Sizing Guidance table.

As an example, if an analysis of the operating profile of a 3500 sized engine shows that it could burn 1,000 liters of fuel between DEF fill opportunities, the DEF tanks would need to be sized to hold at least 100 liters of 32.5% DEF over and above any space required by the tank and tank inserts like level switches or heating provisions. Caterpillar recommends at least 8% of the total tank volume to account for freeze protection and safety margin. Thus, a tank which is fully topped off still has at least 8% of its volume filled with air. This highest point where air is trapped is also where the tank vent should be located. Ensure that the tank filling provisions not only indicate a full tank, but also that overflow will occur prior to consuming the designed expansion volume.

Ratio of DEF to Fuel for DEF Tank Design		
Fuel	32.5% DEF	40% DEF (if allowed)
100	10	8.1

Table 3.5 – Ratio of DEF to Fuel

DEF Bulk Tank Volumetric Considerations	
DEF Freeze Expansion Allowance	3-5%
Recommended Expansion Air Volume	5%
Total Recommended Air Volume	8-10%

Table 3.6 – DEF Bulk Tank Sizing Guidance

Bulk Tank Venting

The main DEF tank must be vented to atmosphere. The vent must be filtered and not allow dirt and debris to enter the DEF supply. The filtration recommendation for the tank vent is the same as DEF entering the dosing cabinet – max particle size 40 microns. This is to promote maximum DEF filter element life.

The bulk tank must vent to atmosphere below the level of the DEF inlet to the DEF injection lance on the CEM. This is to ensure that in the event of DEF tank overfill, the excess DEF leaves the vent and does not flow through the DEF pump check valves and out the DEF nozzle in the CEM.

Failure to properly account for overfilling may result in filling the CEM and engine with DEF.

The vent line must be routed and secured in a continuously upward path. This utilizes gravity to aid the DEF purge process and reduces the risk that DEF will crystallize and clog the DEF line solenoid valves or injection nozzle.

Best practice is to separate the dosing cabinet vent from the bulk tank vent as shown in the diagram below. However, if the dosing cabinet vent includes a drain back to the bulk tank, the bulk tank vent must accommodate excess air flow from several potential sources without allowing the tank to become pressurized beyond the tank pressure capability. The pressure capability is defined by the manufacturer. Even a small amount of pressure in a tank can create considerable mechanical stress and may force DEF flow back to the dosing system through the pickup tube, which could result in deposit formation and hardware failure.

Venting is required to accommodate:

- Expansion of DEF and air due to ambient pressure changes
- Filling of the tank
- Purging of the DEF system with air when the engine system ceases dosing (if connected to the dosing cabinet vent only)

Note: The DEF bulk tank design is the responsibility of the installer. Considerations for allowable bulk tank positive pressure capability:

- Material and structural pressure capacity
- Impact of ambient temperature extremes
- Transient motion and vibration stresses (Mobile Applications)
- Material fatigue
- Safety factor

If the dosing cabinet vent is connected to the bulk tank via a drain back, the peak DEF system backpressure as measured at the DEF inlet strainer during a system purge must be less than 3 kPa or max design pressure limit of the OEM bulk tank, whichever value is lower.

Description	Unit	Air Assist Dosing System
Maximum Vent Air Flow Rate During Purge	Kg/hr	6
Maximum Vent Air Flow Rate During Purge	L/min	78*
Maximum Customer Vent Line Pressure Drop (Including Customer Vent Filter)	kPa	<3

*Condition Assumption – 25 C, 1bar

Table 3.7 Dosing Cabinet Buffer Tank Vent Line Requirements

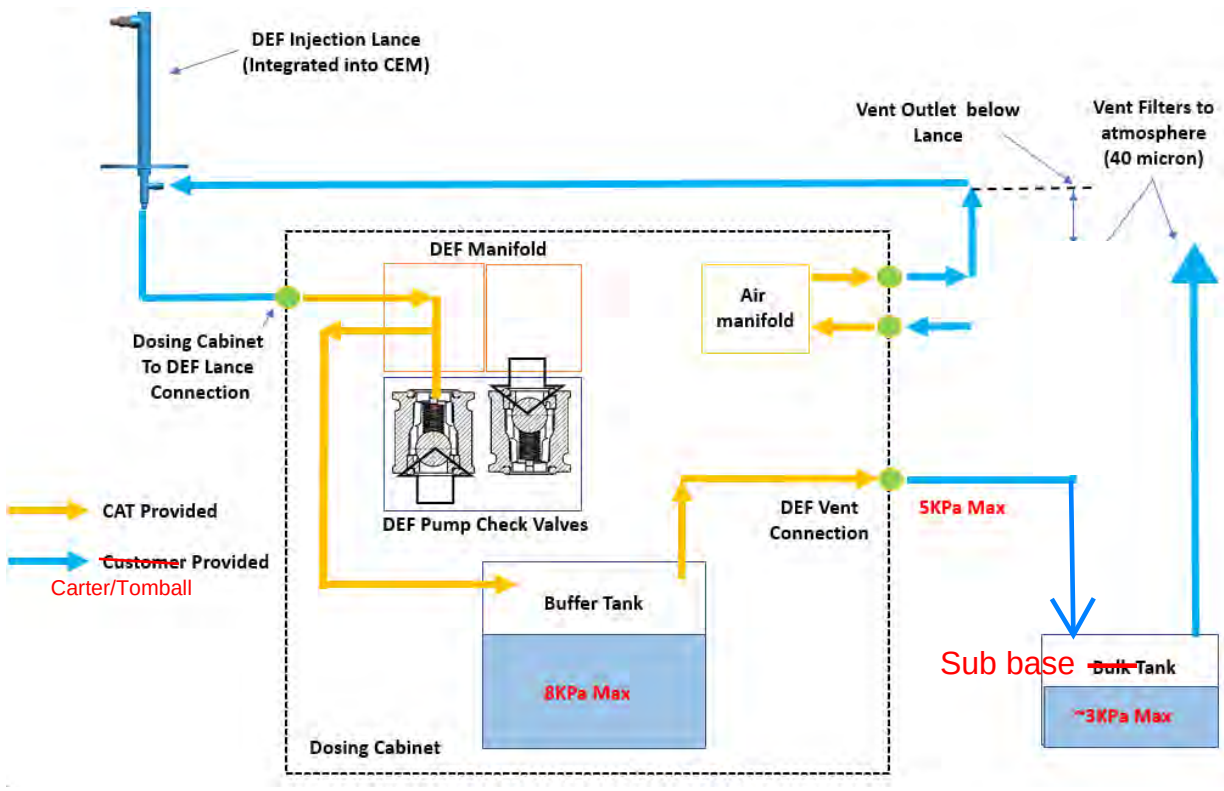

Figure 3.2 Dosing Cabinet Venting Diagram

YC/KW/MECH: For generator enclosure, are those blue arrow all need to be provided by contractor?

YC/KW REV02: Please confirm if buffer tank vent line will be factory provided and installed.

REV03. YC/KW: Provide a response for comments above for Dosing cabinet venting diagram.

See new drawing above

Lifting the Dosing Cabinet

The preferred method of lifting the dosing cabinet is to use two straps wrapped around and through the openings in the base frame as shown in the figure below. The wet weight of the dosing cabinet can be found in the dosing cabinet specifications table. Check the Technical Marketing Information (TMI) for the latest physical data for the dosing cabinet or work through your Cat dealer.

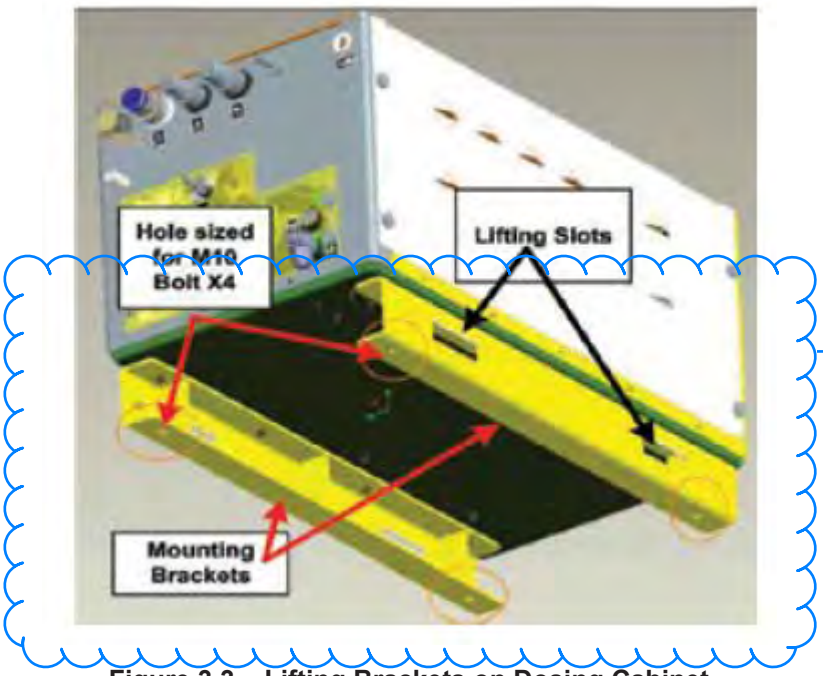

YC/KW/MECH: Please confirm if the mounting bracket will be provided within the generator enclosure.

mounting bracket is provided, install by others

Figure 3.3 – Lifting Brackets on Dosing Cabinet

Mounting of the Dosing Cabinet

Dosing cabinet installation drawings are available in the Engine Drawing Design Center (EDDC) which will depict the mounting hole pattern and detail on connection points.

The dosing cabinet can be mounted using bolt holes in the frame rails. The dosing cabinet frame rails have four M4 bolt holes on the inside of the rails. The unit can be hard mounted or isolation mounted to engine enclosure. The dosing cabinet should not be mounted to the engine or engine frame rails due to vibration concerns.

The dosing cabinet installation location must meet several criteria:

- Ambient temperature around dosing cabinet between 0°C (32°F) (Assuming 40% DEF) and 38°C (100°F)
- Adequate service access to the dosing cabinet
- The cabinet must be below the CEM to facilitate the automatic purge process (See DEF Injection Lance Lines Installation)
- A maximum DEF line pressure drop of 100 kPa (14.5 psi) dosing cabinet DEF out to CEM lance.

YC/KW/MECH: Provide details on how space temperature shall be regulated. Location ambient design is 103.5 F which exceeds ambient rating indicated on equipment.

Exhaust fan not provided. Space heaters are provided. Equipment is rated for listed ambient temperatures.

Note: The pressure drop is the sum of both the head loss and fluid line resistance. Assume 60 liters per hour as the assumed worst-case flow rate for calculation purposes. The optional supplied DEF line is 7.5 mm (0.3 in) inside diameter.

Ambient Temperature Requirements

The unit must be mounted inside an environmentally controlled building or enclosure – d**o not install this unit outside unprotected.** The building or enclosure must maintain an environment suitable for electronics, with an ambient temperature maintained between 0°C (32°F) and 38°C (100°F) to protect them from premature failure (reference LEBW4971 Engine Room Ventilation). The dosing pump and DEF tank require the same ambient temperature range as described for the system electronics. Installing the dosing cabinet in any way that does not protect the cabinet and its components could impact the warranty. Consult Table 3.7 for component temperature limits and Appendix E for sensor temperature zones.

Max SCR System Temperature Requirements	
Component/Parameter	Temperature (°C)
Electronics	
Temperature Sensor	120
NOx Sensor Control Box	105
Pressure Sensor	125
DEF Pressure Line	
DEF Pressure Line Skin Temp*	85

*The DEF Pressure line between the Dosing Cabinet and the CEM must be heated using customer supplied heat trace or other means if the CEM is mounted outside where ambients will fall below 0°C. It is also required that the CEM is insulated in this condition.

Table 3.8 – Component Temperature Limits

Dosing Cabinet Clearance

The dosing cabinet must be mounted in the vertical position, and the dosing cabinet is required to have a 2-foot access clearance on at least one of the sides of the cabinet. Clearance is also required on the front face of the cabinet to allow room to hook up the air and DEF lines along with the electrical harnesses. The model in Figure 3.4 shows the required access dimensions. Side access is only required on one side of the cabinet keeping in mind there are serviceable parts inside the cabinet. Free space above the cabinet combined with side space clearance will enhance the ability to access internal cabinet parts. See the Dosing Cabinet Specifications Table for cabinet dimenions. Also refer the installation drawings in EDDC.

REV03. YC/KW: In previous response, it indicates fan will be included. However, in this page, fan is not provided. Clarify if exhaust fan will be provided. Space heater to maintain temperature above 0F. How do we maintain below 100F?

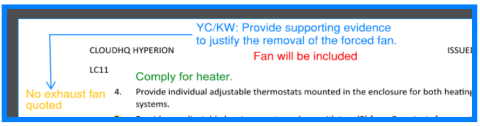

Fan is included. Sorry for confusion

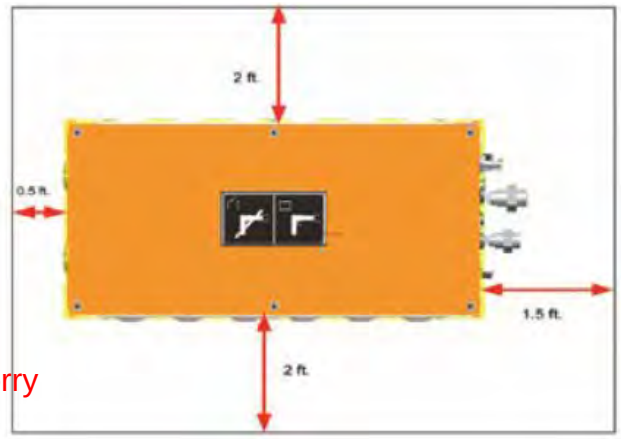

Figure 3.4 – Dosing Cabinet Mounting Clearance Requirements
See the Dosing Cabinet Specifications Table for cabinet dimenions.
Also refer the installation drawings in EDDC.

Dosing Cabinet	
Height	845 mm (33 in)
Width	500 mm (20 in)
Depth	940 mm (37 in)
Weight (Dry)	123 kg (265 lb)
Weight (Wet)	138 kg (303 lb)

Table 3.9 – Dosing Cabinet Specifications

Check EDDC and TMI for the latest physical data for the dosing cabinet or work through your Cat dealer.

Assembly of Cat SCR System Components

- When tightening fittings, torque to specifications.
- Use Teflon tape on compressed air NPT threaded fitting.
- Use DEF sealant on DEF NPT fitting (if equipped).
- Use high temperature anti-seize on all threaded parts in contact with the exhaust system.

Dosing Cabinet Vent Line & Filter

The dosing cabinet (buffer tank) must be vented to atmosphere. The vent must be filtered to prevent dirt and debris from entering the DEF supply. The filtration requirement for the tank vent is the same as DEF entering the dosing cabinet – max particle size 40 microns.

The vent must vent to atmosphere below the level of the DEF inlet to the DEF injection lance on the CEM. This is to ensure that in the event of DEF tank overfill, the excess DEF leaves the vent and does not flow out of the DEF nozzle in the CEM.

Failure to properly account for overfilling may result in equipment damage.

The vent line must be routed and secured in a continuously upward path. The closer to vertical the better. This utilizes gravity to reduce the risk that DEF will crystallize and clog the DEF line or injection nozzle.

The vent must accommodate excess air flow from several potential sources without allowing the dosing cabinet buffer tank to become pressurized beyond the tank pressure capability. Even a small amount of pressure in a tank can create considerable mechanical stress and may force DEF flow back to the dosing system through the pickup tube, which could result in deposit formation and hardware failure.

Venting is required to accommodate:

- Expansion of DEF and air due to ambient pressure changes
- Filling of the tank (automatically controlled by the refill solenoid)
- Purging of the DEF system with air when the engine system ceases dosing

Maximum air flow rate from compressor is 283 L/min (10 scfm) at nominal regulated system pressure. However, the maximum air flow through vent line is a fraction of that flow because much of the regulated compressed air flow passes out the DEF nozzle. The remaining purging air flow is directed through the DEF system as purge air flow. The DEF nozzle air flow restriction without liquid DEF flow is what generates the DEF line purge air pressure.

Description	Unit	Air Assist Dosing System
Maximum Vent Air Flow Rate During Purge	Kg/hr	6
Maximum Vent Air Flow Rate During Purge	L/min	78*
Maximum Customer Vent Line Pressure Drop (Including Customer Vent Filter) at max flow	kPa	5
Maximum Pressure – Buffer Tank	kPa	8

*Condition Assumption – 25 C, 1bar

Table 3.10 Dosing Cabinet Buffer Tank Vent Line Requirements

The customer vent line and bulk tank pressure drop should not exceed 5 kPa at room temperature and vent air flow rate 6 kg/hr. To verify whether they meet this requirement, a pressure transducer can be installed to one port of Dosing Cabinet buffer tank. If the pressure reading is less than 8 kPa during an entire running cycle, the vent line setup is good.

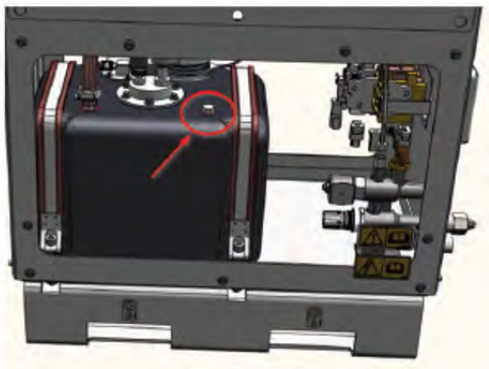

Figure 3.5 Measuring DEF Tank Pressure – Pressure Transducer Location

Dosing Cabinet to CEM DEF Line Purge Volume Returned to DEF Tank Consideration

If the DEF pressure line from the dosing cabinet to the CEM-mounted DEF injector has more than 0.9 liters of fluid volume, it is possible that the dosing cabinet buffer tank may overfill and excess DEF will travel up the dosing cabinet vent line. If this situation occurs, the main DEF tank vent and dosing cabinet vents may be combined at a point higher than the dosing cabinet. This venting strategy will allow excess DEF to flow back to the main tank. The Dosing Cabinet vent must vent to atmosphere below the CEM DEF Lance.

Alternatively, a vent line overfill container may be used to catch excess DEF; however, since the overfill condition may be the result of an automatic process, an overfill tank container must be instrumented to alert the operator should the overfill container fail to drain into the tank due to a drain line restriction. A likely source of restriction is the crystallization of DEF in the overfill container.

Guidelines for CEM Installation

- Use all mounting brackets when securing the CEM into its operating position.
- The CEM is designed to be installed in one orientation only, with the mounting bracket and catalyst assemblies inside parallel to the ground. Do not rotate or flip the housing with the catalyst assemblies inside the unit. Rotating or flipping the unit with the catalyst inside will damage the catalyst.
- Make sure all ports, openings, and connections are clear from obstruction. The injection lance and NOx sensors are serviceable parts and require room to remove for cleaning or service. Minimum clearances for serviceable components are listed in the EDDC keeping in mind that humans will need to be factored into the clearance equation as well.
- Evaluate installing the optional insulation blankets prior to lifting the CEM onto the support frame. Check SIS Web for insulation assembly special instructions.
- Check lengths of all harnesses prior to installation.
- The top of the dosing cabinet must be lower than the DEF injection lance.
- Effective electrical grounding is essential for all personnel when working around and inside electronic enclosures that contain sensitive electronic equipment such as controllers. Static discharges from personnel can damage sensitive electronic equipment.

Lifting the CEM

The CEM is shipped on a pallet and is equipped with lifting eyes. The lifting eyes can be used to remove the unit from the bed of the delivery truck and to install on the support system. When using the lifting eyes to lift the CEM, use all the provided eyes. Failure to do so could result in accidents, potential injury, and equipment damage. These recommended angles produce the least amount of strain on the lifting eyes. The lifting eye design accommodates lifting straps. For additional lifting information, consult NEHS1064.

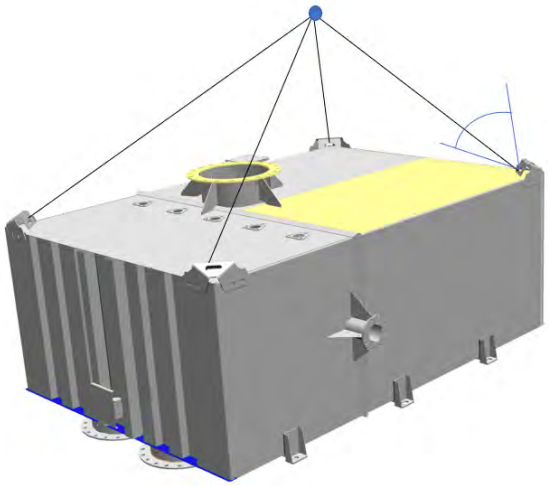

Figure 3.6 – CEM Lifting

Lifting chain must be between 30 deg and 75 deg from horizontal

WARNING

Follow CEM lifting procedures as described in this document, including do not use a spreader bar. Failure to follow proper lifting techniques and procedures can lead to a loss of control of the load and result in personal injury or death.

NOTICE

Rough handling, shock loads, and improper lifting procedure can damage internal components, mounting systems, and substrates.

CEM Reactor Weight

Installation specifications and information is available in the EDDC and TMI. Check with your local Cat dealer for the weight of your specific CEM reactor.

CEM Mounting Instructions

Bolt the CEM housing to the support frame using the mounting brackets, which include a slotted hole running parallel to the short axis of the unit on the exhaust inlet end of the housing, allowing width expansion, and a rectangular slot on the other mounting brackets, allowing thermal expansion in both length and width (Figure 3.7).

Retainer plates should be used on the top of the mounting brackets and a flat washer must be placed on top of the retainer plate and on the bottom side of the support frame when installing the unit.

The torque collar rests on the supporting frame and inside the slots in the mounting bracket. The threaded fastener holds the torque collar in place, and the unit can expand by shifting around the torque collar (Figure 3.7). The torque collar dimensions are 15 mm thick, ID – 17 mm, and OD – 30 mm.

The customer-installed mounting frame should have pre-drilled 22 mm (.875 inch) holes, per drawing dimensions, for a smooth installation. Recommend SAE grade eight (8) M16 bolts and torque to 240±40 N•m.

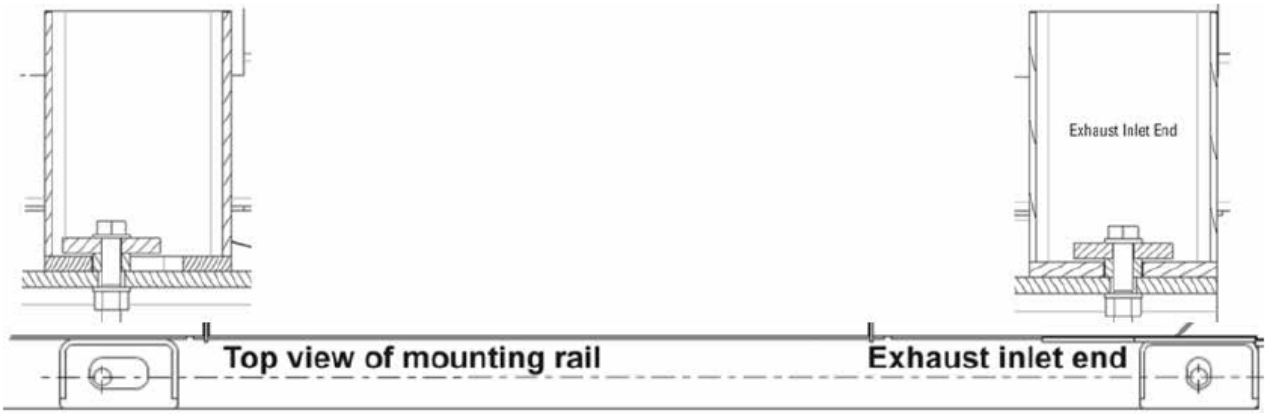

Figure 3.7 – CEM Mounting Technique

Note: It is mandatory that all mounting brackets are in contact with the mounting surface, using shims if necessary, to distribute the load over the entire support frame surface. The dimensions for mounting bracket hole spacing are available in the EDDC.

REV03. YC/KW: Installing contractor to provide insulation outside of the generator enclosure.

Insulation will be provided for exhaust components inside of the enclosure. But none will be provided for the exterior of the enclosure since it is open to atmospheric temperatures.

Thermal Expansion

From its cold state, 409 stainless steel will expand 0.18 mm (.007 in) per 305 mm (1 ft) of reactor length per 50°C (122°F) temperature rise. If not accounted for, the thermal growth can exert undue stress on the engine exhaust system and CEM connections, as well as the pipe supports.

YC/KW/MECH: Flexible joints and insulation shall be provided by contractor to account for thermal expansion at CEM connection (Bellow with insulation) and between two rigid pipe supports (flexible ductwork with insulation). Mechanical contractor to confirm.

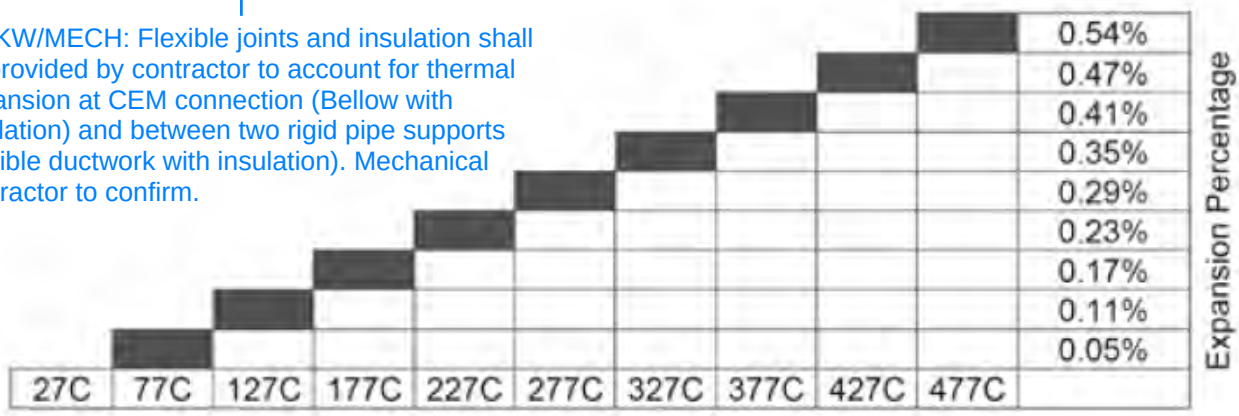

Temperature Rise Table

Table 3.11 – Thermal Expansion Specifications

NOTICE

If CEM is mounted rigid without thermal expansion allowance, weld failures and metal fatigue in the mounting bracket and the shell of the CEM could result in damage to the CEM structure. Do not weld the CEM mounting brackets to the supporting frame. The CEM fastener guide table below lists the various fasteners required to install a CEM reactor at the mounting points shown in Figure 3.8. The exhaust flanges vary per engine bore size, so the required size will depend on the flange used. It is recommended that high temperature (>600°C) anti-seize compound be used on all exhaust bolts.

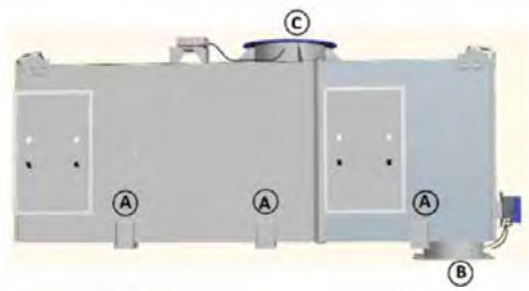

Figure 3.8 – CEM Fastener Guide Connections to the Exhaust System

CEM Fastener Guide		
Mounting Point	**Description**	**Fastener Type/Size**
A	Elongated Base Mounting Brackets	M16 torque 240 ± 40 N•m
B	Exhaust Inlet Flange	As required by flange bolt size
C	Exhaust Outlet Flange	As required by flange bolt size

Table 3.12 – CEM Fastener Guide

Connections to the Exhaust System

The Cat CEM reactor must be isolated from engine vibration. Use bellows on the inlet connection as shown in Figure 3.9. The Cat SCR system inlets and outlets are not designed to handle the significant loads that can come from thermal expansion of piping. Bellows are required on the outlet stack, especially if a long run of piping is required to direct the exhaust out of the building or structure. Install bellows within two stack diameters of the SCR system outlet and in the same direction of flow from the outlet. If stack plenum has multiple directional changes, use bellows along each straight run to accommodate thermal expansion. The exhaust inlet requires a minimum of 305 mm (12 in) of stack length at full inlet flange diameter between transition and/or bellows and CEM inlet flange (Figure 3.9).

Note: If insulation is applied to a bellows connection, adequate clearance must be provided to prevent friction wear between the thin wall of the bellows and inner surface of the insulation.

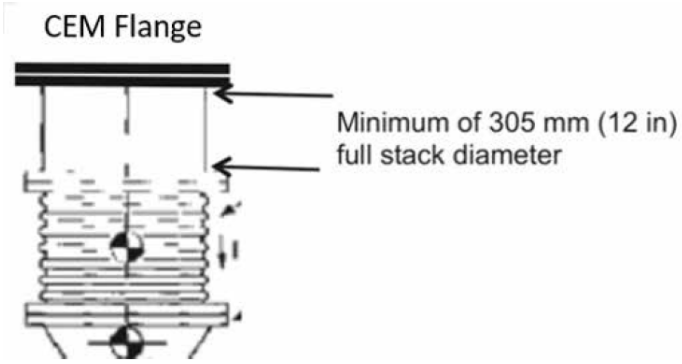

Figure 3.9 – Exhaust Bellows Connection

CEM Outlet Flange Capability to Support an Exhaust Stack

The following table depicts the capability of the CEM outlet flange to support an exhaust stack. Horizontal Axis – Bending moment applied to the flange expressed in kN•m.

Vertical Axis – Force applied to the flange vertically downward (weight of the stack) expressed in kN.

Tabular Data – The safety factor derived by Caterpillar engineering given a downward force (vertical axis) and bending moment (horizontal axis). A safety factor of >2 is considered acceptable. The green area in the table contains safety factors >2.

Note: The limit of vertical force on the outlet flange is 2 kN, and the maximum bending moment on the flange is 1.4 kN•m.

Note: Only horizontal stack guy wires are recommended. Angled stack guy wires should not be used to limit bending moment because they will impart a significant vertical downward force on the outlet flange.

Example:

An exhaust stack is estimated to have a 200 kg mass.

The stack will be installed with a stabilizing support structure which will prevent the stack from tipping and hence will not impart a bending moment on the CEM outlet flange.

Vertical Force (N) = mass of exhaust stack x gravity (9.81 m/s^2)
= 200 kg x 9.81 m/s^2
= 1962 N = 1.962 kN

Using the table – This would result in a safety factor of between 4.59 and 4.55 as seen in the lower left of the table.

Outlet(LCF)		Moment(KN-m)												
		0	0.2	0.4	0.5	0.6	0.8	1	1.2	1.4	1.5	1.6	1.8	2
Force(KN)	0	45.34	9.93	5.46	4.46	3.76	2.87	2.32	1.95	1.68	1.57	1.48	1.32	1.19
	0.2	27.71	9.29	5.26	4.32	3.67	2.82	2.29	1.92	1.66	1.55	1.46	1.30	1.18
	0.4	19.13	8.73	5.08	4.20	3.58	2.76	2.25	1.90	1.64	1.54	1.45	1.29	1.17
	0.5	16.57	8.48	4.99	4.14	3.53	2.74	2.23	1.89	1.63	1.53	1.44	1.29	1.16
	0.6	14.57	8.23	4.90	4.08	3.49	2.71	2.22	1.87	1.62	1.52	1.43	1.28	1.16
	0.8	11.83	7.79	4.74	3.97	3.41	2.66	2.18	1.85	1.60	1.51	1.42	1.27	1.15
	1	9.91	7.39	4.59	3.86	3.33	2.61	2.15	1.83	1.59	1.49	1.40	1.26	1.14
	1.2	8.59	7.03	4.45	3.76	3.26	2.57	2.12	1.80	1.57	1.47	1.39	1.25	1.13
	1.4	7.57	6.70	4.32	3.66	3.18	2.52	2.09	1.78	1.55	1.46	1.38	1.24	1.12
	1.5	7.13	6.55	4.25	3.62	3.15	2.50	2.07	1.77	1.54	1.45	1.37	1.23	1.12
	1.6	6.73	6.41	4.19	3.57	3.11	2.48	2.06	1.76	1.54	1.44	1.36	1.23	1.11
	1.8	6.07	6.13	4.07	3.49	3.05	2.44	2.03	1.74	1.52	1.43	1.35	1.22	1.11
	2	5.50	5.88	3.96	3.40	2.99	2.40	2.00	1.72	1.50	1.42	1.34	1.21	1.10

Table 3.13 – Load Limit Capability for Exhaust Out Flange at 400°C Expressed in Safety Factor

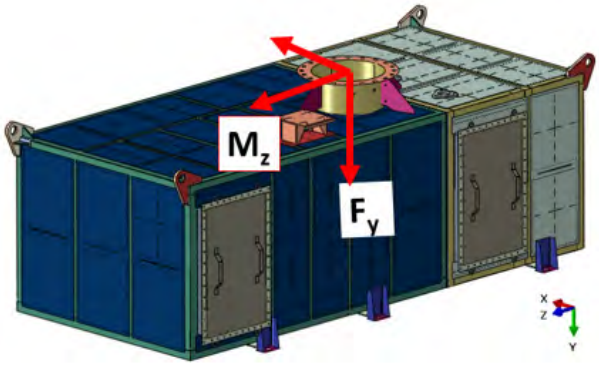

Figure 3.10 – Force and Moment

Note: If the Fatigue Factor of Moment (kN•m)/Force (kN) (Figure 3.10) falls within the green data points, your stack weight should be within specifications (Fatigue Factor >2). The outlet (rated temp) is 400°C.

Wires must not be used to secure the stack to eliminate a moment on the exhaust flange. Stacks should be supported by a sleeve or support system which will allow the stack to grow under thermal expansion but still prevent any moment being placed on the exhaust flange and outlet wall.

CEM Inlet Flange Capacity to Support inlet piping

The following table depicts the capability of the CEM Inlet flange to support inlet piping.

Horizontal Axis – Bending moment applied to the flange expressed in kN•m.

YC/KW/MECH: Please provide the force and moment table and figure for side outlet CEM unit.

Attached and below

Vertical Axis – Force applied to the flange vertically downward (weight of the piping) expressed in kN.

Tabular Data – The safety factor derived by Caterpillar engineering given a downward force (vertical axis) and bending moment (horizontal axis). A safety factor of >2 is considered acceptable.

The green area in the table contains safety factors >2.

Rated Inlet(LCF)		Moment(KN-m)						
		0	0.2	0.4	0.5	0.6	0.8	1
Force(KN)	0	42.14	4.72	2.44	1.97	1.65	1.24	1.00
	0.2	18.58	4.35	2.34	1.90	1.60	1.21	0.98
	0.4	11.92	4.03	2.24	1.83	1.55	1.19	0.96
	0.5	10.11	3.89	2.20	1.80	1.53	1.17	0.95
	0.6	8.77	3.75	2.15	1.78	1.51	1.16	0.94
	0.8	6.94	3.52	2.07	1.72	1.47	1.14	0.93
	1	5.74	3.28	2.00	1.67	1.43	1.12	0.91
	1.2	4.90	3.07	1.93	1.62	1.40	1.09	0.90
	1.4	4.27	2.87	1.86	1.57	1.36	1.07	0.88
	1.5	4.01	2.79	1.83	1.55	1.34	1.06	0.88
	1.6	3.78	2.70	1.80	1.53	1.33	1.05	0.87
	1.8	3.39	2.55	1.74	1.49	1.30	1.03	0.86
	2	3.08	2.42	1.69	1.45	1.27	1.01	0.84

Table 3.14 – Load Limit Capability for Exhaust Inlet Flange at 400°C Expressed in Safety Factor

The following table depicts the capability of the CEM Inlet flange to support inlet piping. Horizontal Axis – Bending moment applied to the flange expressed in kN•m.

Vertical Axis – Force applied to the flange vertically downward (weight of the piping) expressed in kN.

Tabular Data – The safety factor derived by Caterpillar engineering given a downward force.

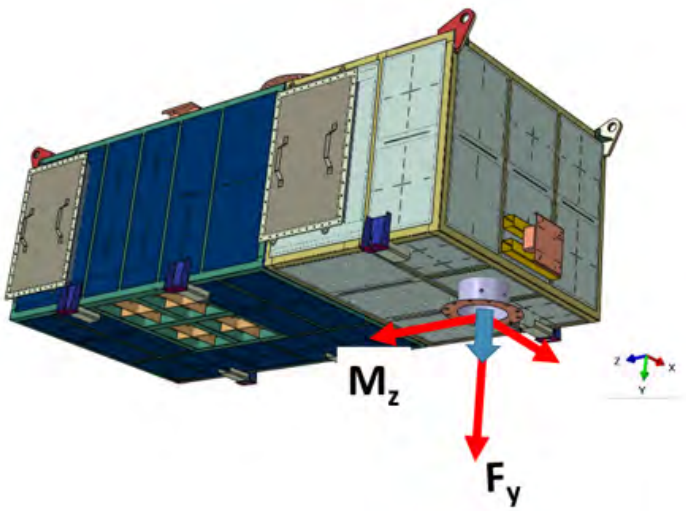

Figure 3.11 – Load Limit Capability for Exhaust Inlet Flange

Water Ingress Prevention

The presence of water in the CEM can cause failures such as cracking of the catalyst from freeze/thaw cycles, cracking of the catalyst by water causing thermal gradients across the catalyst substrate, and potential for loss of mat retention. Exhaust system outlets must be provided with an appropriate means of preventing snow, rainwater, or sea spray from entering the CEM through the exhaust piping. This can be accomplished by several methods but must be given careful consideration. The selected method can impose significant restrictions that must be considered when calculating system backpressure. One simple method, used primarily with horizontal exhaust pipes, is to angle cut the end of the exhaust pipe with the point at the top.

A common method used with vertical exhaust pipes is to angle the pipe at 45° or 90° from vertical using an appropriate elbow, then angle cutting the pipe end as previously described.

For applications where none of the previous methods are possible, it may be necessary to fit some form of rain cap to the end of the vertical pipe section. This method can provide a positive means of water ingress prevention but not without imposing a significant backpressure restriction.

Additional information related to exhaust system installation can be found in the Caterpillar publication LEBW4970.

General Exhaust Requirements Summary

Attention should be given to exhaust gas flow restriction with the following recommendations:

- The exhaust backpressure must not exceed the limits given for each engine family and the Cat CEM installation. Reference TMI System Data or Engine Sales Manual for commercial applications and engine technical specifications.
- The exhaust piping must allow for movement and thermal expansion so that undue stresses are not imposed on the turbocharger structure or exhaust manifold.
- Never allow the turbocharger to support more than allowable loads. Reference TMI System Data or Engine Sales Manual for commercial applications and engine technical specifications.

Backpressure Verification

Excessive backpressure drop in the exhaust system will adversely affect the performance of the engine and the Cat SCR system. It is required that the systems meet these criteria for optimal performance. Excessive pressure drops can yield higher than expected exhaust temperatures, lower fuel economy, reduced altitude capability, decreased engine response, and less than rated power.

For retrofit SCR systems, it is recommended that exhaust backpressure be measured and recorded prior to installing the SCR system. Once installed, the exhaust backpressure should be measured and recorded for future comparison as an indicator of catalyst performance.

Measuring Backpressure

Exhaust backpressure is measured as the engine is operating under full rated load and speed conditions (High Idle for Naturally Aspirated engines). Either a water manometer or a gauge may be used. It is recommended exhaust backpressure is tested and recorded on new installations to be available for future reference. An electronic backpressure sensor is located in the sensor box mounted on the exhaust inlet end of the CEM, and the sensor pressure pick-up unit is installed in the nearest exhaust inlet tube. This pressure sensor monitors the exhaust pressure in real time, and the data is recorded and displayed using the dosing cabinet controller and interface screen (MECP1).

YC/KW/MECH: Please confirm if CEM insulation is factory provided and factory installed.

Insulation Requirements

It is very important to retain as much heat in the CEM as possible, as the SCR reaction process and the regeneration process of the DPFs, if equipped, are more efficient at higher exhaust temperatures. Insulate all piping prior to the Cat CEM, as shown in the figures below. Check with your local Cat dealer regarding insulation practices related to exhaust system components. Refer to LEBE0039 Retrofit Diesel Particulate Filter (DPF) Reactor manual for additional requirements when using DPFs including regeneration strategies.

Note: CEM insulation is available in the pricelist as an option. Selecting this option is recommended because the insulation components are available as replacement parts, which will allow for cost effective replacement or repair. Each insulation kit is supported by an installation special instruction. Contact your Cat dealer who can access the installation special instructions via SIS Web using the serial number prefix of the aftertreatment Common Arrangement.

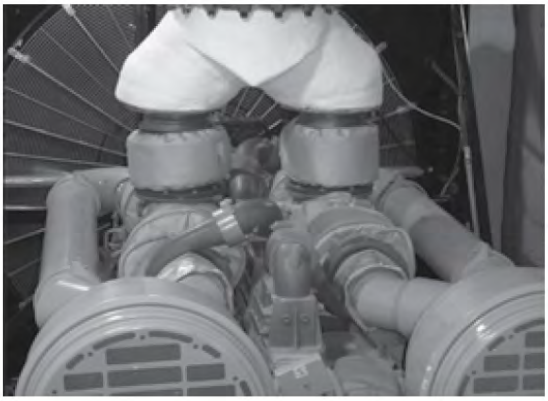

Insulatation will be provided for internal exhaust components of the enclosure. But none will be provided for the exterior.

Figure 3.12 – Exhaust Piping Insulation

The CEM surface temperature and/or exhaust gas temperatures are difficult to specify and depend upon many factors including: the design and packaging of the SCR system, the engine speed/load conditions, the condition of the SCR catalyst, if insulation blankets are installed, and ambient conditions. Therefore, the potential surface temperature of an insulated CEM can exceed 100°C (212°F). An uninsulated CEM can reach surface temperatures of 450°C to 500°C (842°F to 932°F). For a safe project design, the proper precautions should be taken to ensure the aftertreatment device is properly shielded and not mounted near surrounding components that may be damaged by heat. Ensure that heat sensitive wire harnesses or other components are not installed between insulation blankets and the CEM body. See Appendix D.

See the figures below for an example of a custom-made insulation (thermal) blanket.

YC/KW REV02: CEM is exterior mounted unit. Since CEM is factory provided, will it make sense for factory to provide custom thermal blanket?

no blanket will be provided for external SCR.

Figure 3.13 – Custom Thermal Blanket

Dosing Cabinet

Normal functions/operations of the dosing cabinet include:

- Monitor and dose DEF
- Monitor and regulate compressed air
- House dosing controller
- Provide monitoring connections and display system conditions on the MECP1 screen (see OMM M0075634-04 for instructions of MECP-1)

The dosing cabinet works within specified operating conditions. If the operating conditions change beyond the specification, take additional care to address these issues. Whenever a critical component is replaced, recalibration might be required.

DEF Supply to the Dosing Cabinet

Desired fill rate is about 5.8 liters (1.5 gal) per min at 34-69 kPa (5-10 psi) DEF supply pressure at the dosing cabinet fill port. For example, a 10-foot height difference generates 32 kPa (4.6 psi) DEF pressure.

Fill rate and overall flow restriction in valves, lines, and filters upstream to the dosing cabinet need to be accounted for when designing the DEF supply system (See DEF Supply Requirements at Dosing Cabinet Inlet Table).

If a transfer pump is used to supply DEF to the dosing cabinet buffer tank the transfer pump must be sized to provide 34-69 kPa (5-10 psi). The pump must supply no more than a max of 69 kPa (10 psi) of pressure at the DEF fill port based on the flow rate and total flow restriction in the line from the remote tank to the buffer tank. A 10-psi pressure relief valve is recommended in the supply line between the DEF pump discharge and the DEF filter (Figure 2.2).

The dosing cabinet interacts with external components via its connection points. These connections could be electrical, electronic, compressed air, or liquid (DEF). The Cat retrofit SCR systems include the DEF and compressed air hoses and associated fittings to connect the cabinet to the DEF injector. Maintain tubing diameter from the cabinet outlet connector to the injection lance inlet connector. The included fluid and air hoses measure 18 300 mm (60 ft) in length and may need to be trimmed to fit. The hose kit is a non-heat traced package for basic installation between the dosing cabinet and DEF injector.

If operation in climates below -11°C (12°F) is certain, it is recommended that a self-regulated heat trace cable be applied to the DEF line to protect DEF or condensation from freezing. Small droplets of DEF or condensation may freeze into crystals, which could impact the operation of components or plug the DEF injector nozzle. Freeze protection must include DEF supply lines, valves, and the DEF filter.

Dosing Cabinet Connection Points

Figure 3.14 – Dosing Cabinet

Connection Point	Description	Fitting Type
1	Service tool connector	9 Pin
2	Electrical harness from dosing cabinet to engine ECM	23 Pin Connector
3	Electrical harness from dosing cabinet to main DEF tank (level sensor/transfer pump)	14 Pin Connector
4	Electrical harness from CEM to dosing cabinet	21 Pin Connector
5	DEF vent port (see “DEF Vent Line Requirements” below)	1/2" Hose Bead SAE AS5131
6	Electrical harness from dosing cabinet to 120V AC source	Grommet for wiring & Terminal Blocks
7	DEF line from dosing cabinet to CEM	No. 6 STOR (Straight Thread O-Ring)
8	DEF inlet line to strainer on dosing cabinet	1/2" JIC
9	Air line from dosing cabinet to CEM	No. 6 STOR (Straight Thread O-Ring)
10	Air line into dosing cabinet	3/8" JIC
11	DC power for display	3 pin connector

Table 3.15 – Dosing Cabinet Connection Points

DEF Vent Line Requirements

The DEF vent port must have a vent line installed to route buffer tank fumes to meet local regulatory guidelines for ammonia fumes and the following routing requirements:

- DEF vent line exit must be below DEF injector.
- Vent line must be routed back to storage tank or a regulatory-approved waste container in the unlikely event of buffer tank overfill.
- Vent line must be routed continuously away from vent port without kinks or loops that would allow DEF pooling in line.

Installation of the DEF Injection Lance

In some cases, the DEF lance may be shipped loose to minimize overall shipping packaging size and width from the factory.

Be sure to inspect the DEF injection lance for damage and ensure that the nozzle orifices are clear of debris. Do not disassemble the nozzle from the DEF injection lance unless an issue is noted.

Be sure that gasket surfaces are clean and free of debris or shipping material residue. Ensure the flange gasket is installed.

The DEF lance and nozzle are installed as one component. The nozzle sprays in the downstream direction. A flow direction arrow is marked on the lance assembly to indicate the correct direction of flow. Note that there is a feature included in the CEM to ensure the correct flow direction when the DEF lance assembly is installed.

Note: Torque DEF lance mounting bolts to 370 ± 50 N·m (275 ± 37 lb·ft).

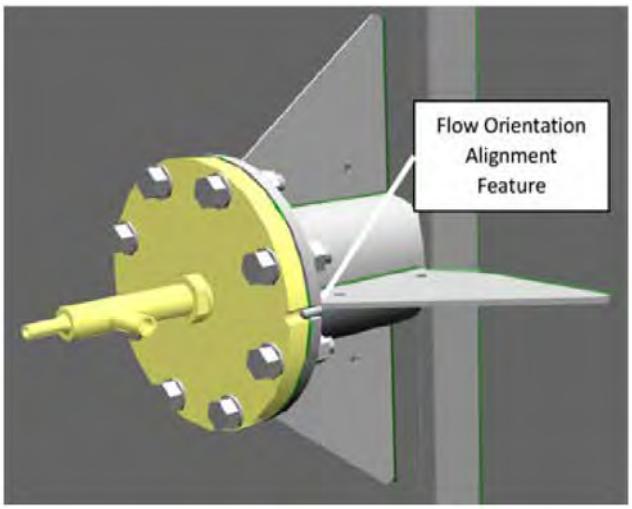

Figure 3.15 – DEF Injection Lance

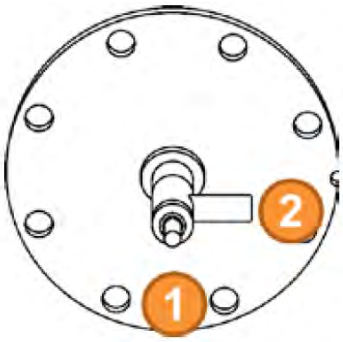

Figure 3.16– DEF Injection Lance

Name	Location	Description	Fitting Type
DEF Port	1	DEF supply line 1/4" male NPT	Mechanical
Compressed Air Inlet	2	Compressed air line 1/2" male NPT	Mechanical

Table 3.16 – Injector Lance Threaded Port Connections

DEF Injection Lance Lines Installation

Prior to hose line installation, be sure to thoroughly blow out the lines. Particles in the air or DEF lines will clog the spray nozzle, causing a system failure.

The DEF and compressed air lines are to be installed following general routing and clipping rules keeping the lines from contacting sharp edges that could fatigue and fail the line from vibration or system operating movements.

Other considerations should include routing continuously upwards without kinks, low spots, extreme bends, or loops that could restrict DEF/compressed air flow throughout the operating temperature extremes. The routing recommendations assist the dosing operation and promotes a complete purge cycle.

To connect the DEF line to the injector, fasten the threaded elbow onto 1/4” NPT fitting of the injector with DEF thread sealant as needed (See the DEF Injection lance figure above.). Push the barbed hose fitting into the hose and secure with hose clamp provided.

Note: The hose will need to be seated against the hex portion of the fitting before applying clamp. Connect the hose barb fitting to the threaded 1/4” elbow to complete the DEF line connection to the injection lance.

Figure 3.17 – DEF Line Connection to the Injector Lance

To connect the DEF line to the dosing cabinet, slip the hose clamp onto the DEF hose then push the hose onto the quick connect coupler which will make up with the fitting on the front of the cabinet (Figure 3.18).

Figure 3.18 – DEF Line Connection to the Dosing Cabinet

To connect the compressed air line to the injector lance, fit the 1/2” NPT elbow, using thread sealant as required, to the 1/2” male NPT fitting on the lance (Figure 3.18). Push the #8 hose onto the hose barb adapter until the hose is seated firmly against the yellow collar, then thread the hose barb adapter to the elbow. Do not install a hose clamp on the barbed adapter (Figure 3.19).

Figure 3.19 – Compressed Air Line Connection to the Injector Lance

To install the compressed air line to the dosing cabinet, push the #8 hose barb adaptor onto the hose until the yellow collar is seated firmly against the hose – do not use a hose clamp (Figure 3.19). Fit the 3/4 – 16 STOR/JIC to the appropriate port on the dosing cabinet air manifold (Figure 3.14). Then fasten the barbed adapter to the JIC fitting (Figure 3.20).

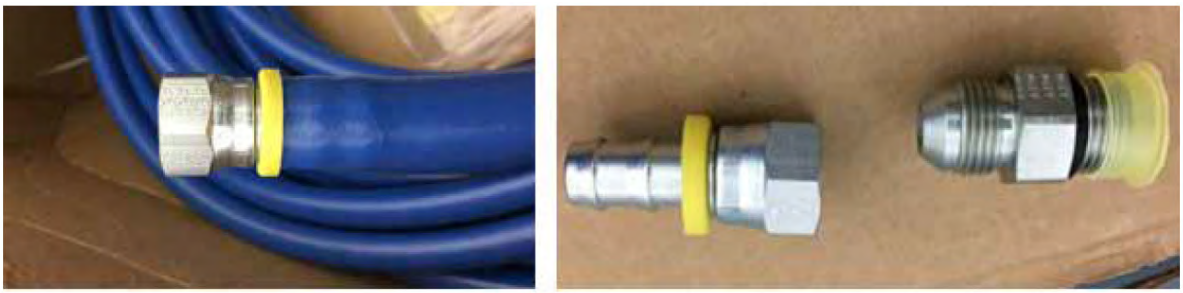

Figure 3.20 – Compressed Air Line Connection to the Dosing Cabinet

Installation of CEM Sensor Boxes

In some cases, inlet and outlet sensor boxes may be shipped loose to minimize overall shipping packaging size and width from the factory.

NOTICE

The sensor boxes are CEM serial number specific; there is an imbedded A1E1 (electronic memory chip) in the inlet sensor box harness describing the CEM's performance via a performance code and the serial number and part number of the CEM which is visible via Cat Electronic Technician (Cat ET). Be sure that the serial number on the sensor box matches the serial number plate on the CEM before installation. Failure to match serial numbers could lead to performance issues or fault codes which will not allow commissioning to be completed until corrected.

NOTICE

If insulation blankets are to be installed, install the blanket insulation first. Sensor wiring and pressure sensor tubing must be installed outside the insulation. Covering the sensor wires with insulation will cause the wire insulation thermal capability to be exceeded, leading to sensor failures.

Utilize hardware included in the factory-shipped loose materials to mount the sensor boxes as shown in the figures below. The sensor boxes must be mounted utilizing the thermally insulated mica spacers as shown. Hardware is included inside the sensor boxes when shipped from the factory. Remove the cover to access the hardware and uncoil the sensor wiring.

Do not use sensors that have been dropped or exposed to other forms of mishandling. Damage to the sensor may have occurred that is not visible.

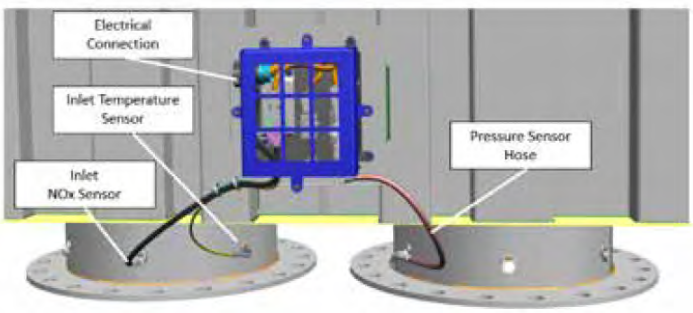

Figure 3.21 – Inlet Sensor Box Installation

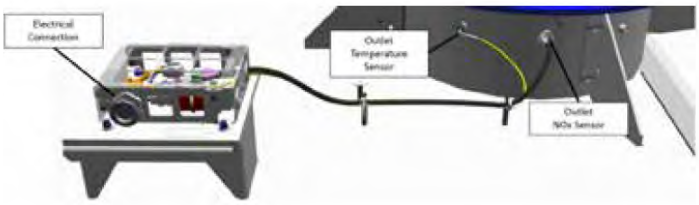

Figure 3.21 – Outlet Sensor Box Installation

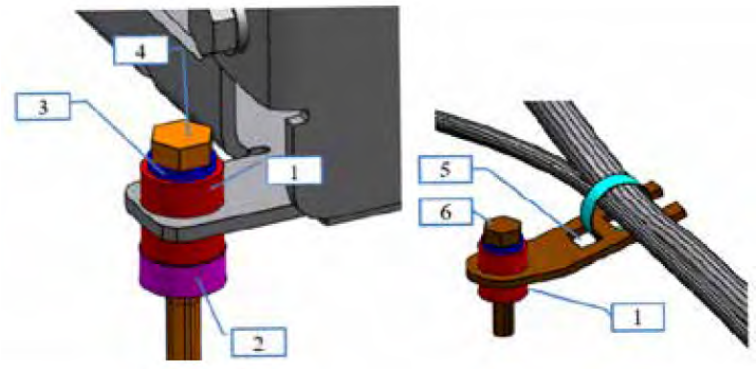

Figure 3.22 – Typical Thermal Isolated Mounting

Item #	Part Name
1	Thermal Mica Spacer (Two Required per Bolt)
2	Spacer
3	Washer
4	Bolt
5	Ladder Clip
6	Bolt

Table 3.17 – Typical Thermal Isolated Mounting

Note: Two thermal isolating mica spacers are required per joint. Mica thermal spacers are brittle and may crack if overly compressed. Torque thermal isolation joint bolts to 6 ± 1 N·m.

Inlet/Outlet NOx Sensors

- Do not use sensors that have been dropped or exposed to other forms of mishandling. Damage to the sensor may have occurred that is not visible.
- Retain sensor tip protective caps until just prior to installation. Keep the sensor tip clean.
- Sensor threads are factory coated with high temperature anti-seize grease. Do not apply additional grease prior to installation.
- Use 468-8116 Slotted Socket (22 mm) to tighten the sensor.
- Torque to 50 N·m ± 10 N·m.
- Ensure that the NOx sensor is not covered with insulation. The insulation would trap heat in the sensor body and cable. This heat may cause sensor failure.

Inlet/Outlet Temperature Sensors

- Apply high-temperature, nickel-based anti-seize to both sides of threaded joint.
- Sensor – Torque to 45 ± 5 N·m.
- Ensure that the temperature sensor is not covered with insulation. The insulation would trap heat in the sensor body and cable. This heat may cause sensor failure.
- Ensure wiring is secured utilizing thermally insulated clipping points.

Inlet Pressure Sensor

- The pressure sensor is mounted in the sensor box. The box must be oriented as shown in the diagram above which will ensure that the sensor tip is pointed down, which will eliminate the possibility that the sensor function will be interrupted by condensation in the sensor connection hose.
- Hose must be routed and secured using thermal isolation to prevent vibration-induced hose wear or thermal damage.
- Sensor – Torque to 10 N·m ± 2 N·m.

Off CEM Sensor Box Re-location

Installers may relocate the Cat sensor box to improve service access, reduce key component temperatures, or reduce vibration. It is very difficult to anticipate every possible issue that may arise if the sensor boxes are relocated. If the installer wishes to relocate the sensor boxes, design integration review highly recomended with the aftertreatment design team. Contact your Cat dealer and factory installation support team.

Key factors which must be considered:

- Sensor lead lengths can not be modified, alternate length options are not available.
- NOx sensors must be mounted in a way which prevents exhaust condensation from reaching the tip of the sensor. The CEM is equipped with special NOx sensor ports which both tip the sensor slightly down into the exhaust flow and also channel an condensation around the NOx Sensor tip to prevent sensor water ingress failure modes.
- Sensor probes and wiring leads must not be covered in insulation. Consult the diagrams below for details on sensor temperature limits.
- The sensor box(es) include a electrical chip embedded in the sensor box harness which is programmed at the factory. The chip is read by the aftertreatment ECM to identify the part number, unique CEM number, and performance code. The CEM serial number stored on that chip can be read using Caterpillar's electronic service tool (Cat ET).

Note: The sensor boxes shipped with the CEM must be matched to the original factory CEM, failure to do this will cause the incorrect CEM serial number to be displayed when viewed with Cat ET service tool versus the CEM serial number tag. If this situation occurs, contact your Cat dealer for assistance. The issue can be corrected electronically or by exchanging the sensor boxes to align the correct serial numbers.

The pressure sensor must always be pointed downward to prevent liquid water from pooling on the face of the sensor. The sensor hose should be routed to allow any condensation to flow back down into the exhaust stream. The pressure sensor hose must be routed to prevent water from pooling in the hose creating a liquid trap which will cause pressure readings to be inaccurate. The sensor box has two pressure sensor mounting options. If the sensor boxes are relocated by the OEM, the pressure sensor may need to be moved to the alternative position with in the sensor box to correct the pressure sensor orientation.

Sensor Temperature Zones

NOx Sensor

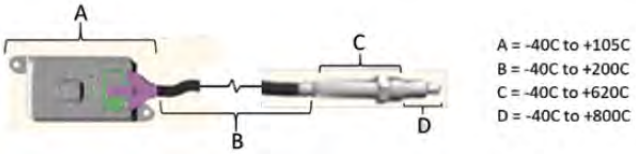

Temperature zone B has a maximum temperature value of 200°C (392°F). If the optional insulation package is used, care must be taken to ensure the insulation collar doesn't cover the electrical harness that makes up zone C.

Note: Approximate length of NOx sensor Zone B is 900 mm. Sensor port on CEM must not change location.

CEM Temperature Sensor

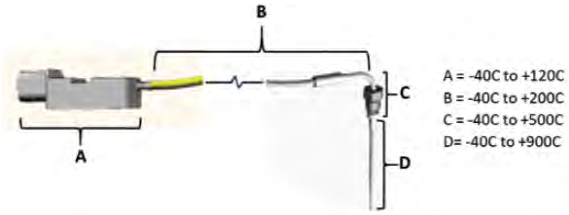

Note: Approximate length temperature sensor Zone B is 1200 mm. Sensor port on CEM must not change location.

CEM Pressure Sensor

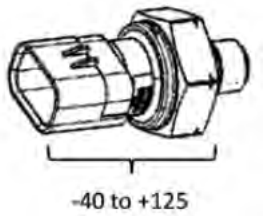

Note: Caterpillar supplied inlet pressure hose is approximately 600 mm in length with a 90 deg connection to the CEM port. The sensor box must be located above the CEM sensor port to allow any condensation to run down the hose and away from the sensor.

CEM Electrical Harness Installation

Wire Harness Routing

Wiring shall be routed to ensure reliability and to offer protection from the following:

1. Harnesses shall be located a minimum of 50 mm from high heat sources (e.g. exhaust manifolds, turbochargers, hydraulic components, etc.) to avoid insulation and/or connector deterioration
2. Chafing/rubbing/vibrating against other parts
3. Use as handholds or as support for personal equipment
4. Damage by personnel moving around the installation
5. Damage by impact or thrown or falling debris
6. Damage by battery acid fumes, engine and hydraulic oil, fuel, and coolant
7. Abrasion or damage when exposed to rocks, ice, mud, etc.
8. Vandalism damage (to the maximum extent practicable)
9. Damage by moving parts
10. Harsh environments such as nitrite mines, high temperatures, or areas susceptible to significant fluid or fume concentration
11. Wire harnesses shall not be near oil and fuel fluid fill areas or below fuel and oil filter locations. If these locations cannot be avoided, additional protective covers and shields must be provided to protect the harness.

Harness Maintenance Considerations

The maintainability of the wiring system must be an important consideration in the selection, design, and installation of harnesses, cable assemblies, and other wiring system components. All wiring components shall be accessible, repairable, and replaceable (i.e. connector terminals).

Harness Appearance

The primary purpose for the wiring system is to provide electrical and electronic component function. There is, however, another important and intangible value to consider when designing the wiring system. The appearance of the wire harness and its routing path should reflect an orderly, well-thought-out design plan. A poorly executed plan can have a negative impact on OEM/installer perceptions of the entire product. Use the product's horizontal and vertical lines for routing paths. Design preformed bends into large harnesses to facilitate product assembly and improve appearance. Use other product elements to shield or hide the harness from view. Benchmark new automotive product applications for ideas.

Harness Bends

Routing of the harness should ensure connector seals are not stressed because the harness curvature is too close to the connector. This applies to routing of OEM/installer lines on or near the engine harness as well as the ECU OEM/installer connector (J1/P1).

The minimum bend radius for a braided wire harness as measured from the inside of the bend shall be four times the outer diameter of the harness. Tighter bends are possible if the bend is performed during harness manufacture. The bend radius size and location must be specified on the wire harness drawing.

Bends in jacketed cables must be based on manufacturer recommendations. A bend must not adversely affect the operating characteristics of the cable. For flexible coaxial cables, the bend radius must not be less than six times the outside diameter. For semi-rigid coaxial cable, the bend radius must not be less than ten times the outside diameter of the cable.

The minimum bend radius for flexible conduit must be six times the outer diameter of the conduit. Conduit bends shall not cause internal chafing of the wiring.

Harness Bends Near Connectors
Avoid wire harness bends within 25 mm (1.0 in) of the connector. When a harness bend is too close to the connector, the connector seal is stretched away from the wire, providing an opening for moisture entry. The wire should exit perpendicular to the connector before curving as necessary for routing.
Refer to illustration in Figure 3.24.

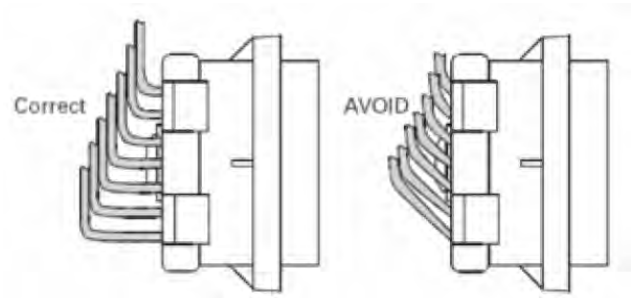

Figure 3.23 – Example of Wire Harness Routing at the PJ-C1, C2 Connectors

Wire harness bends near a connector must be no less than twice the wire harness diameter. Special consideration shall be given to connectors with large wire counts. Stresses placed upon the retention system of the connector can cause contact retention failures and wire pull-out. To avoid this problem, consider the following options:

1. Pre-form the harness to the required bend. The harness assembly drawing must detail the harness bend requirements (e.g. location and radius). The harness braid protection should be applied up to the tangent point of the bend furthest from the connector. Connector orientation to the bend may be necessary and should be specified on the harness print.
2. If harness braiding is used, increase the unbraided harness length to 150 mm. This will allow the wires to fan out when the harness is bent, greatly reducing the forces placed on the connector contact retention system. The connector should also be oriented properly with respect to the harness so that upon installation to the product, the harness will not need to be twisted to align the connector.

Drip Loop
When a harness is routed downward to a connector, terminal block, panel, or junction box, a trap or drip loop must be provided in the harness. This feature will prevent fluids or condensate from running into the above devices.

Wire Connection Guidelines
The following requirements ensure the correct installation of solid contacts into connector terminals:

- Do not solder the contact (socket or pin) to the wire.
- Never crimp more than one wire into a contact. Connector contacts are designed to accept only one wire of a specified gauge or gauge range; do NOT insert multiple wires of a smaller gauge.
- All contacts should be crimped on the wires. Use the crimp tool (Cat part number 1U-5804) for 12 to 18 AWG wire.

Perform the pull test on each wire. The pull test is used to verify that the wire is properly crimped in the contact and the contact is properly inserted in the connector terminal. Each contact and connector terminal should easily withstand 45 N (10 lb) of pull such that the wire remains in the connector body.

Sealing Splices and Ring Terminals

Caterpillar requires all ring terminals and splices connected to the engine ECM be sealed using Raychem ES2000 adhesive lined heat shrink tubing or equivalent. Refer to Table below for heat shrink tubing size information.

Cat Part Number	ID Before Shrink		ID After Shrink	
	mm	inch	mm	inch
125-7874	5.72	0.225	1.27	0.050
125-7875	7.44	0.293	1.65	0.065
119-3662	10.85	0.427	2.41	0.095
125-7876	17.78	0.700	4.45	0.175

Table 3.18 – Heat Shrink Tubing Reference

Wire Type

Wire must be of a type suitable for the application. Wire must be selected so that the rated maximum conductor temperature is not exceeded for any combination of electrical loading, ambient temperature, and heating effects of bundles, protective braid, conduit, and other enclosures. Typical factors to be considered in the selection are voltage, current, ambient temperature, mechanical strength, connector sealing range, abrasion, flexure, and extreme environments such as areas or locations susceptible to significant fluid concentrations.

Wire Size

The minimum conductor size used on Cat machines is 0.8 mm^2 (18 AWG). Smaller conductors are susceptible to breakage and fatigue failures. SAE J1614 wiring distribution systems for construction, agricultural, and off-road work machines require wire sizes no smaller than 0.8 mm^2 (18 AWG).

Jumper harness wire size requirements per connection are defined in the Cat CEM and Engine Jumper Harness Definition tables below (Tables 3.15 and 3.16).

Wire Insulation

Note: Thermoplastic polyvinyl chloride (PVC) insulation shall not be used in wire harness designs because of its low operating temperature range (-40 to 85°C) and melting and flammability characteristics.

Cross-linked polyethylene (XLPE) is the primary wire insulation type used in chassis, cab, and engine compartment locations. It has a temperature rating of -50 to 120°C. The voltage rating for Cat 1E0815 wire and SAE J1128, Type GXL is 50 volts. The circuit voltage shall be considered when making wire selections. This wire insulation is also available with 50, 150, 300, or 600-volt ratings. Outside diameter insulation range is 2.26 to 3.33 mm (0.089 to 0.131 in). The table below provides insulation diameter range for each gauge and wire type.

Connector Wire Insulation Size and Gauge		
Wire Type	Wire Gauge	Insulation Diameter
GXL	14	0.114 – 0.125
	16	0.098 – 0.112
	18	0.089 – 0.098

Table 3.19 – Wire Insulation

Metric Equivalents for AWG Wire Numbers						
AWG	20	19	18	16	14	12
Diameter (mm^2)	0.5	0.65	0.8	1	2	3

Table 3.20 Connector Seal Plug

All unused cavities for sockets and pins must be filled with seal plugs to ensure that the connector is sealed (Figure 3.25). Two options are available for plugging unused connector cavities. Either the Deutsch 114017 (Cat part number 8T-8737) or PEI Genesis 225-0093-000 (Cat part number 9G-3695) sealing plugs can be used.

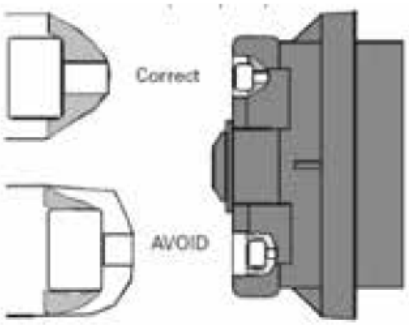

Figure 3.24 – Plug Insertion in Unused Connector Cavity

The seal plugs are installed from the wire insertion side of the plug or receptacle. Correct installation of either of these cavity plugs is critical to maintain connector sealing integrity. The figure above illustrates the correct insertion of the plug. The seal plug cap is designed to rest against the seal, not to be inserted into the hole in the seal.

Connection Points on the CEM Exhaust Inlet Sensor Box

The CEM junction box harness will electrically quick-connect to the provided fitting on the inlet sensor box and outlet sensor box (See table below). The quick-connector is keyed to match to the appropriate sensor box.

Connection Point for CEM Harness

Connection Point for CEM Harness			
Connection Point	**Reference Number**	**Description**	**Fitting**
A	Figure 3.24	Inlet Sensor Group to CEM Junction Box	CE-C913 18 Pin Connector
B	Figure 3.25	Outlet Sensor Group to CEM Junction Box	CE-C912 19 Pin Connector

Table 3.21 – Connection Points on CEM Exhaust Outlet

The CEM exhaust inlet NOx sensor, exhaust back pressure sensor, and inlet exhaust temperature sensor are installed in the exhaust inlet flange ring and contained in the sensor enclosure (Figure 3.25).

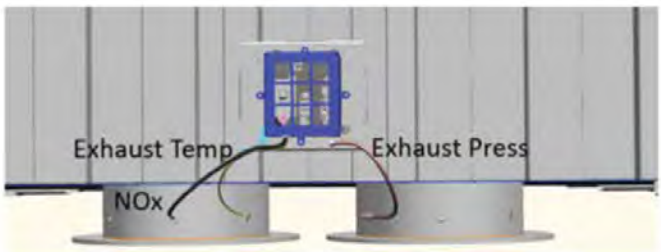

Figure 3.25 – Typical View of Exhaust Inlet Flange(s) and CEM Sensor Box

Connection Points on the CEM Exhaust Outlet Sensor Box

The CEM outlet NOx sensor and exhaust temperature sensor is installed in the exhaust outlet flange ring and contained in the sensor enclosure. The outlet sensor enclosure also contains the CEM ID module.

Caution: The NOx sensor is a precision instrument and can be damaged by rough handling or sudden temperature changes. Take care when handling and installing. See REHS8151 for additional information. (NOx in and NOx out sensors are different part numbers).

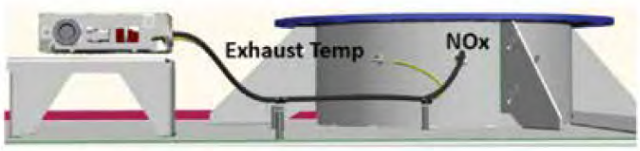

Figure 3.26 – Exhaust Outlet Flange

CEM Harness Connection Points

The CEM terminal box harness will electrically quick-connect to the provided fitting on the exhaust inlet and outlet sensor enclosures. The quick-connectors are keyed to match to the appropriate jack on the CEM.

CEM Junction Box harness length is 3878 mm (152 in)

Figure 3.27 – Threaded Mountings for CEM Wire Harness

The dosing cabinet terminal box harness will electrically quick-connect to the appropriate fittings on the front of the dosing cabinet. There are four multi-pin keyed quick-connectors on the harness from the dosing cabinet terminal box.

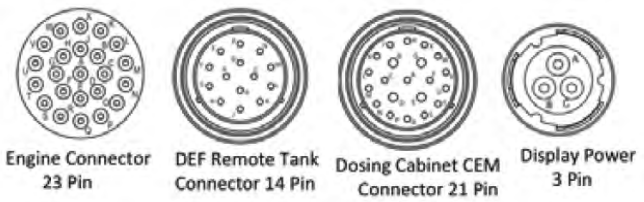

The Dosing Cabinet Junction Box harness length is 4077 mm (160 in)

Figure 3.28 – Dosing Cabinet Electrical Connections and Terminal Strip Box

CEM and Dosing Cabinet Component Overview

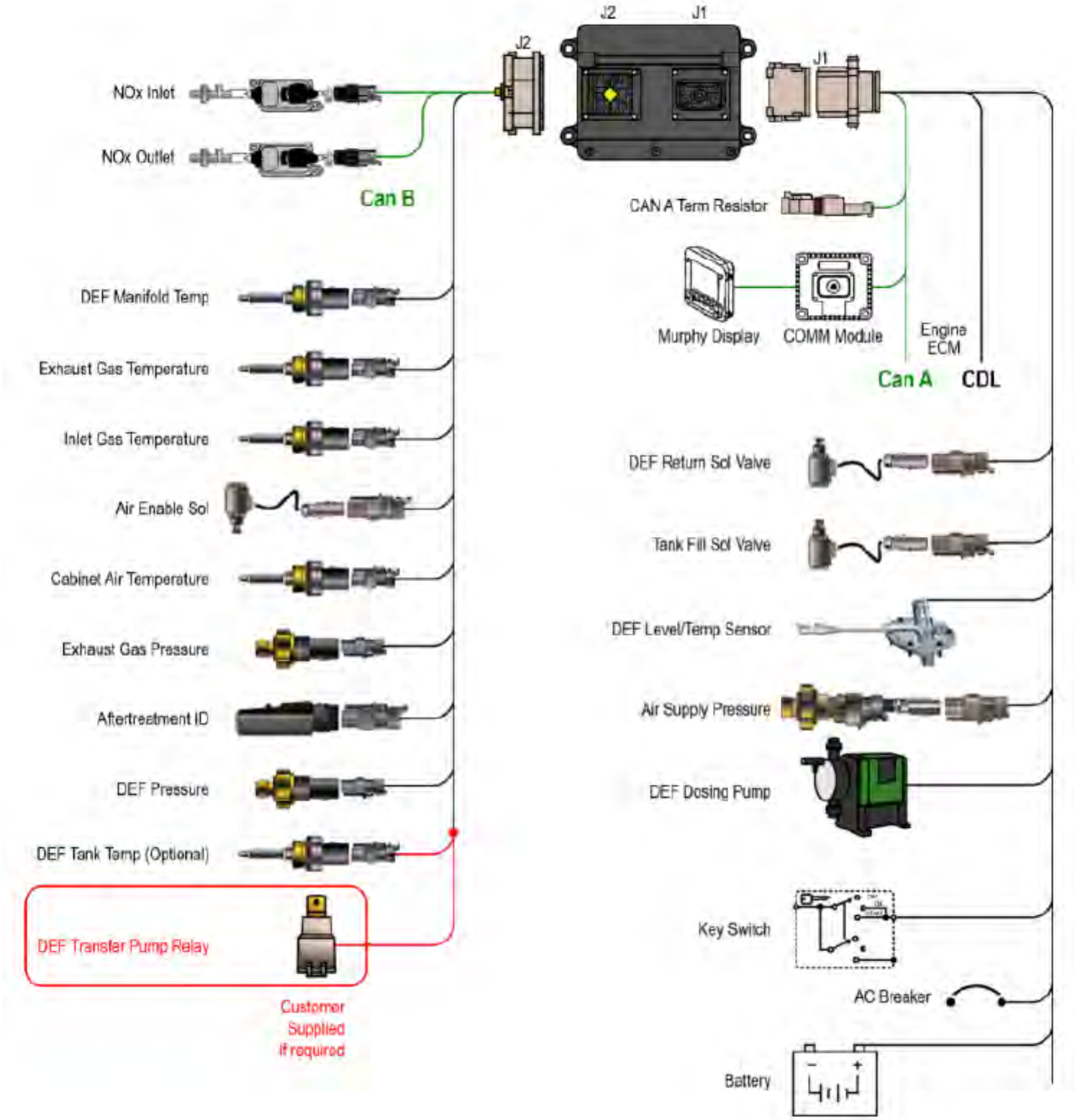

Figure 3.29 – Dosing Cabinet Wire Harness, Terminal Box, and Connectors

4.0 Cat CEM and Control System

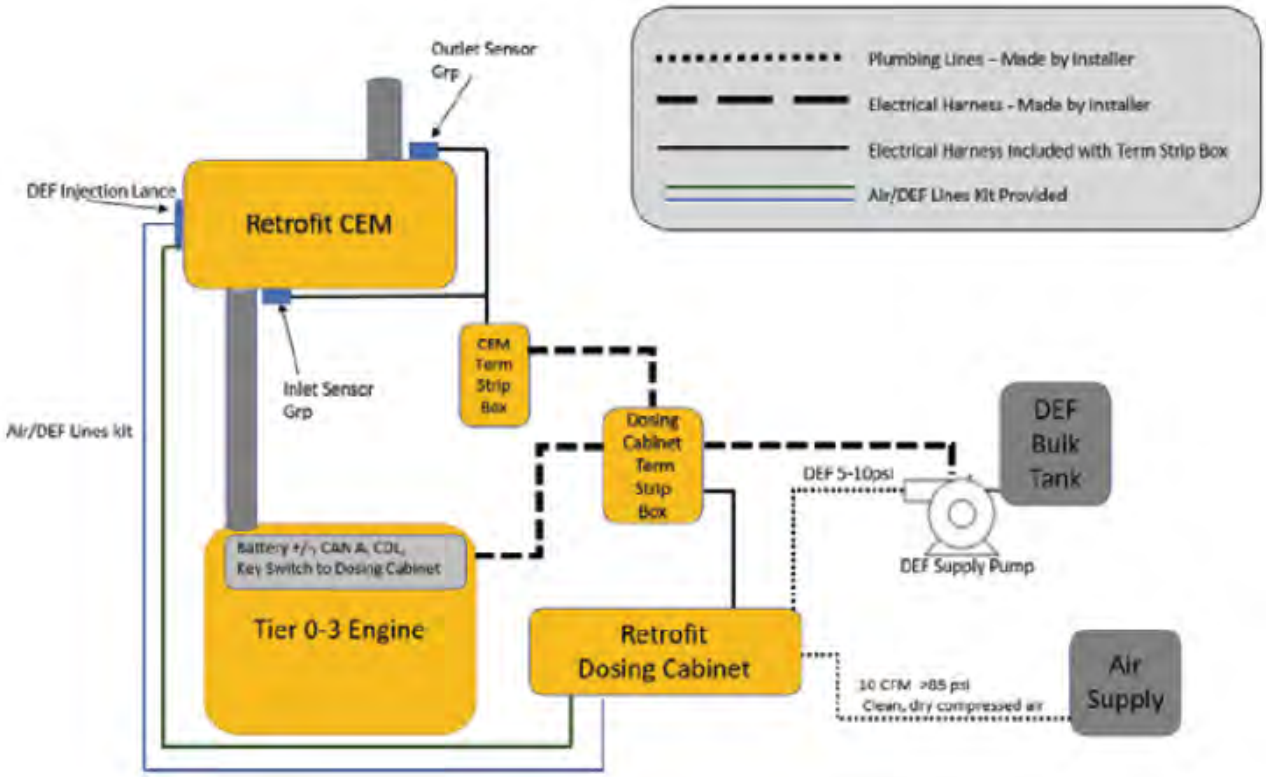

Figure 4.1 – CEM System Arrangement

CEM Control Power

The supplied wiring harnesses for the dosing cabinet and CEM are equipped with terminal strip junction boxes that will need to be electrically connected by a customer-supplied jumper harness built on-site (Figure 4.4). This harness will be point to point from the CEM terminal strip box to the dosing cabinet terminal strip box. Use the CEM terminal box information on the following pages for termination guidance. There is also a terminal identification film on the inside of the terminal box cover for additional terminating information (Figure 4.3). The supplied harness lengths are shown in Figures 3.25 and 3.26.

The dosing cabinet junction box harness connects to the front of the dosing cabinet with keyed connectors. See Figure 3.12 for dosing cabinet connector layout. The CEM terminal strip junction box connects to the inlet and outlet sensor enclosures with keyed connectors and the sensor enclosures are mounted on the CEM close to the exhaust inlet and exhaust outlet flanges.

A 24VDC power harness is required between the engine power system or the EMCP (Electronic Modular Control Panel) and the dosing cabinet terminal strip box (Figure 4.1). Consult the dosing cabinet terminal pin out film on the terminal box cover (Figure 4.2). Battery positive, battery negative, keyswitch, and CAN A conductors will need to be installed.

Optional dosing cabinet power cycle and keyswitch circuit interrupt techniques are shown below and described in the Cat Retrofit SCR Commissioning document (media number UENR4339).

The 24VDC electric power to the dosing cabinet needs to be cycled off to unlatch fault codes so the exhaust aftertreatment controller can function properly and the dosing pump will be enabled to operate once the appropriate parameters are attained.

A recommended process for cycling power to the dosing cabinet only is the use of a momentary normally closed multiple contact switch. When the switch is activated, the 24VDC power to the aftertreatment controller will be interrupted, and existing fault codes will be unlatched. A convenient mounting location for the switch is in the dosing cabinet junction box.

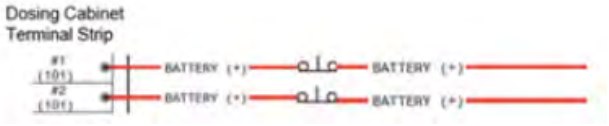

24VDC Power Cycle Switch

Once the commissioning process is completed, the NVM (non-volatile memory) needs to be saved, and this process is accomplished by interrupting power to the keyswitch circuit to the dosing cabinet (see below). This action will force a save operation within the aftertreatment ECM. This can be achieved by installing a momentary normally closed switch on the keyswitch conductor.

Keyswitch Power Cycle

Dosing Cabinet Terminal Strip Box

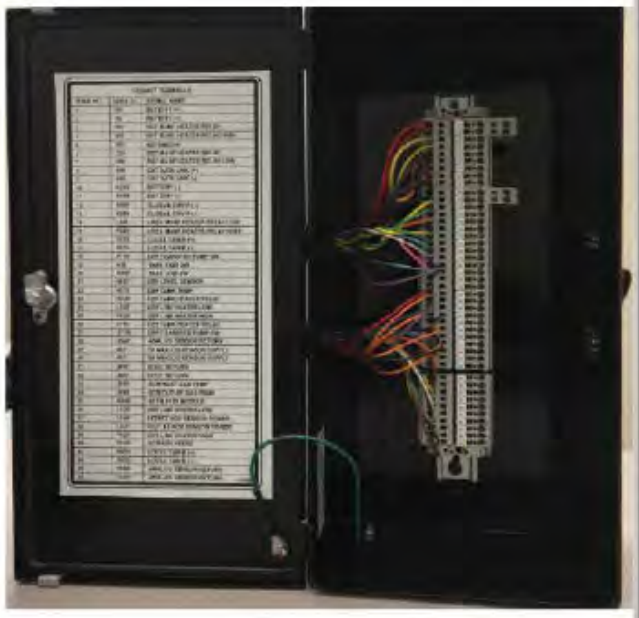

CABINET TERMINALS		
TERM NO.	WIRE ID	SIGNAL NAME
1	101	BATTERY(+)
2	101	BATTERY(+)
3	103	DEF MANF HEATER RELAY
4	103	DEF MANF HEATER RELAY HIGH
5	105	KEYSWITCH
6	229	DEF MANF HEATER RELAY
7	229	DEF MANF HEATER RELAY LOW
8	944	CAT DATA LINK(+)
9	945	CAT DATA LINK(-)
10	A250	BATTERY(-)
11	A250	BATTERY(-)
12	K900	GLOBAL CAN A (+)
13	K990	GLOBAL CAN A (-)
14	L838	UREA MANF HEATER RELAY LOW
15	P830	UREA MANF HEATER RELAY HIGH
16	R970	LOCAL CAN B (+)
17	R976	LOCAL CAN B (-)
18	Y719	DEF TRANSFER PUMP SW
19	410	TANK HIGH SW
20	A487	TANK LOW SW
21	H857	DEF LEVEL SENSOR
22	H811	DEF TANK TEMP
23	H839	DEF TANK HEATER RELAY
24	H838	DEF LINE HEATER LOW
25	P830	DEF LINE HEATER HIGH
26	T791	DEF TANK HEATER RELAY
27	Y719	DEF TRANSFER PUMP SW
28	Y947	ANALOG SENSOR RETURN
29	997	5V ANALOG SENSOR SUPPLY
30	997	5V ANALOG SENSOR SUPPLY
31	J807	DOUT RETURN
32	J807	DOUT RETURN
33	J890	SCR INLET GAS TEMP
34	J891	SCR OUTLET GAS TEMP
35	K895	AFTM #1 ID MODULE
36	L838	DEF LINE HEATER LOW
37	L920	INTAKE NOX SENSOR POWER
38	L921	OUTLET NOX SENSOR POWER
39	P930	DEF LINE HEATER HIGH
40	P938	SCR ABS PRESS
41	R970	LOCAL CAN B (+)
42	R976	LOCAL CAN B (-)
43	T993	ANALOG SENSOR RETURN
44	T993	ANALOG SENSOR RETURN

Figure 4.2 – Dosing Cabinet Junction Box and Terminal Strip Connections

CEM Terminal Strip Box

CEM TERMINALS		
TERM. NO.	WIRE ID	SIGNAL NAME
1	997	5V ANALOG SENSOR SUPPLY
2	997	5V ANALOG SENSOR SUPPLY
3	J807	DOUT RETURN
4	J807	DOUT RETURN
5	J890	SCR INLET GAS TEMP
6	J891	SCR OUTLET GAS TEMP
7	K895	AFTM #1 ID MODULE
8	L920	INTAKE NOX SENSOR POWER
9	L921	OUTLET NOX SENSOR POWER
10	P938	SCR ABS PRESS
11	R970	LOCAL CAN B (+)
12	R976	LOCAL CAN B (-)
13	T993	ANALOG SENSOR RETURN
14	T993	ANALOG SENSOR RETURN

Figure 4.3 – CEM Terminal Strip Connections

Note: Replacement terminal box labels are available through the Cat parts system.

CEM to Dosing Cabinet Jumper Harness

A customer-supplied jumper harness will need to be run between the dosing cabinet terminal box and the CEM terminal box. There are 14 terminals in the CEM terminal box that will be wired point-to-point to terminals 29 through 44, except for pins 36 and 39, in the dosing cabinet terminal box. See the tables below for conductor specifications. The supplied CEM terminal box harness length is 3878 mm (152 in), and the dosing cabinet terminal box harness length is 4077 mm (160 in).

Figure 4.4 – CEM to Dosing Cabinet Jumper Harness

Panel Connection Tables

If a Cat control panel is installed, the aftertreatment wiring connections can be made directly in connector C1 at the bottom of the panel using the appropriate crimp on sockets.

Panel Connections Pinouts

The following tables provide wiring informaiton for each of the junction boxes. they are color-coded by destination and type for easy reference.

Destination	Description
Customer Supplied	+ VDC
CEM Terminal Box	0 VDC
Engine Connector	Signal
	Communications

Control Panel					
Control panel	ID	Description	Color	Size	PETU Teminal
C1:12	105	Keyswitch	BR	18	5
C1:17	K900	Global CAN +	YL	18	12
C1:18	K990	Global CAN -	GN	18	13
C1:50	101	System Power 24V	RD	14	1
C1:51	101	System Power 24V	RD	14	2
C1:52	A250	System Power OV	BL	14	10
C1:53	A250	System Power OV	BL	14	11

CEM Terminal Box					
SCR Terminal	ID	Description	Color	Size	PETU Teminal
1	997	5V Analog Sensor Power	OR	18	29
2	997	5V Analog Sensor Power	OR	18	30
3	J807	Dout return	BK	18	31
4	J807	Dout return	BK	18	32
5	J890	CEM Inlet Gas Temp	BI	18	33
6	J891	CEM Outlet Gas Temp	GN	18	34
7	K895	Aft #1 Module ID	BU	18	35
8	L920	Intake NOx Sensor 24V	BR	18	37
9	L921	Outlet NOx Sensor 24V	YL	18	38
10	P938	CEM Abs Pressure	WH	18	40
11	R970	Local CAN+	YL	18	41
12	R976	Local CAN-	GN	18	42
13	T993	Analog Sensor Return	BR	18	43
14	T993	Analog Sensor Return	BR	18	44

Dosing Cabinet Teminal Bos					
Terminal	ID	Description	Color	Size	Destination
1	101	System Power 24V	RD	14	Control Panel C1:50
2	101	System Power 24V	RD	14	Control Panel C1:51
5	105	Keyswitch	BR	18	Control Panel C1:12
6	229	DEF Heater Relay 0V			Not used
7	229	DEF Heater Relay 0V			Not used
8	893	CDL +	GN	18	Engine DCL +
9	892	CDL -	BR	18	Engine DCL -
10	A250	System Power 0V	BK	14	Control Panel C1:52
11	A250	System Power 0V	BK	14	Control Panel C1:53
12	K900	Global CAN +	YL	18	Control Panel C1:17
13	K990	Global CAN -	GN	18	Control Panel C1:18
14	L838	DEF Heater Relay 24V			Not used
15	P830	DEF Heater Relay 0V			Not used
16	R970	Local CAN +			Not used
17	R976	Local CAN -			Not used
18	Y719	DEF Transfer Pump Switch			Not used
19	410	DEF Tank Hi Switch	WH	18	DEF Tank Hi Switch
20	A487	DEF Tank Lo Switch	PU	18	DEF Tank Lo Switch
21	H857	Local DEF Tank Level Sensor			Not used
22	K811	Local DEF Tank Temp Sensor			Not used
23	K839	DEF Heater Relay 24V			Not used
24	L838	DEF Line Heater 0V			Not used
25	P830	DEF Line heater 24V			Not used
26	T791	DEF Heater Relay 0V			Not used
27	Y719	DEF Transfer Pump Switch	BU	18	DEF Pump Relay Coil-
28	Y947	Analog Sensor Return			Not used
29	997	5V Analog Sensor Power	OR	18	CEM Terminal Box Terminal 1
30	997	5V Analog Sensor Power	OR	18	CEM Terminal Box Terminal 2
31	J807	Dout Return	BK	18	CEM Terminal Box Terminal 3
32	J807	Dout Return	BK	18	CEM Terminal Box Terminal 4
33	J890	CEM Inlet Gas Temp	BU	18	CEM Terminal Box Terminal 5
34	J891	CEM Outlet Gas Temp	GN	18	CEM Terminal Box Terminal 6
35	K895	Aft #1 Module ID	BU	18	CEM Terminal Box Terminal 7
36	L838	DEF Line Heater 0V			Not used
37	L920	Intake NOx Sensor 24V	BR	18	CEM Terminal Box Terminal 8
38	L921	Outlet Nox Sensor 24V	YL	18	CEM Terminal Box Terminal 9
39	P830	DEF Line Heater 24V			Not used
40	P938	SCR Abs Pressure	WH	18	CEM Terminal Box Terminal 10
41	P970	Local CAN +	YL	18	CEM Terminal Box Terminal 11
42	P976	Local CAN -	GN	18	CEM Terminal Box Terminal 12
43	T993	Analog Sensor Return	BR	18	CEM Terminal Box Terminal 13
44	T993	Analog Sensor Return	BR	18	CEM Terminal Box Terminal 14

AC Power

Customer-supplied

Dosing Cabinet AC Electrical Power
The standard retrofit CEM dosing cabinet requires a 120VAC 15A (North America) circuit connected to the AC terminal strip inside the cabinet (Figure 4.5) and should be powered from a dedicated GFCI circuit. The dosing cabinet must be installed per national and local electrical codes. Electrical conduits or similar devices should not be installed on the side walls or the top of the dosing cabinet since these are service access panels.

This cabinet must not be used for the routing of external electrical circuits that are not part of the CEM electrical system.

AC Termination Location
The AC power connections are inside the dosing cabinet. They can be accessed by removing either the top or side panel (Figure 4.5). The terminal strip is marked COM for the white neutral wire, PWR for the black power wire, and GND for the green ground wire. The AC connection can operate between 100 to 240 volts single phase AC, at 50 or 60 Hertz. The 100-240VAC powers the dosing pump and an EMI filter only. Take note that various AC power ratings must be wired as L1 (power), Common, and Ground (Figure 4.5).
The dosing cabinet controller can detect if the AC power is interrupted and will disable the cabinet operation as well.

The remaining SCR system components are powered from the engine 24VDC power source.

Figure 4.5 – Dosing Cabinet AC Power Connections

Label Dosing Cabinet Power Disconnect Switches
It is recommended to label the dosing cabinet power disconnect switch with a warning:

NOTICE

Do not disconnect electrical power to the dosing cabinet unless the local monitor screen displays “dormant.”

Parameters are saved once per hour into flash memory. Disconnecting power when the system is not ready will cause data to be lost. The dosing cabinet must not be powered down during a purge cycle. System state is shown on the local control panel or display.

The following schematic (Figure 4.6) includes AC and DC power, keyswitch circuitry, and DEF transfer pump circuitry.

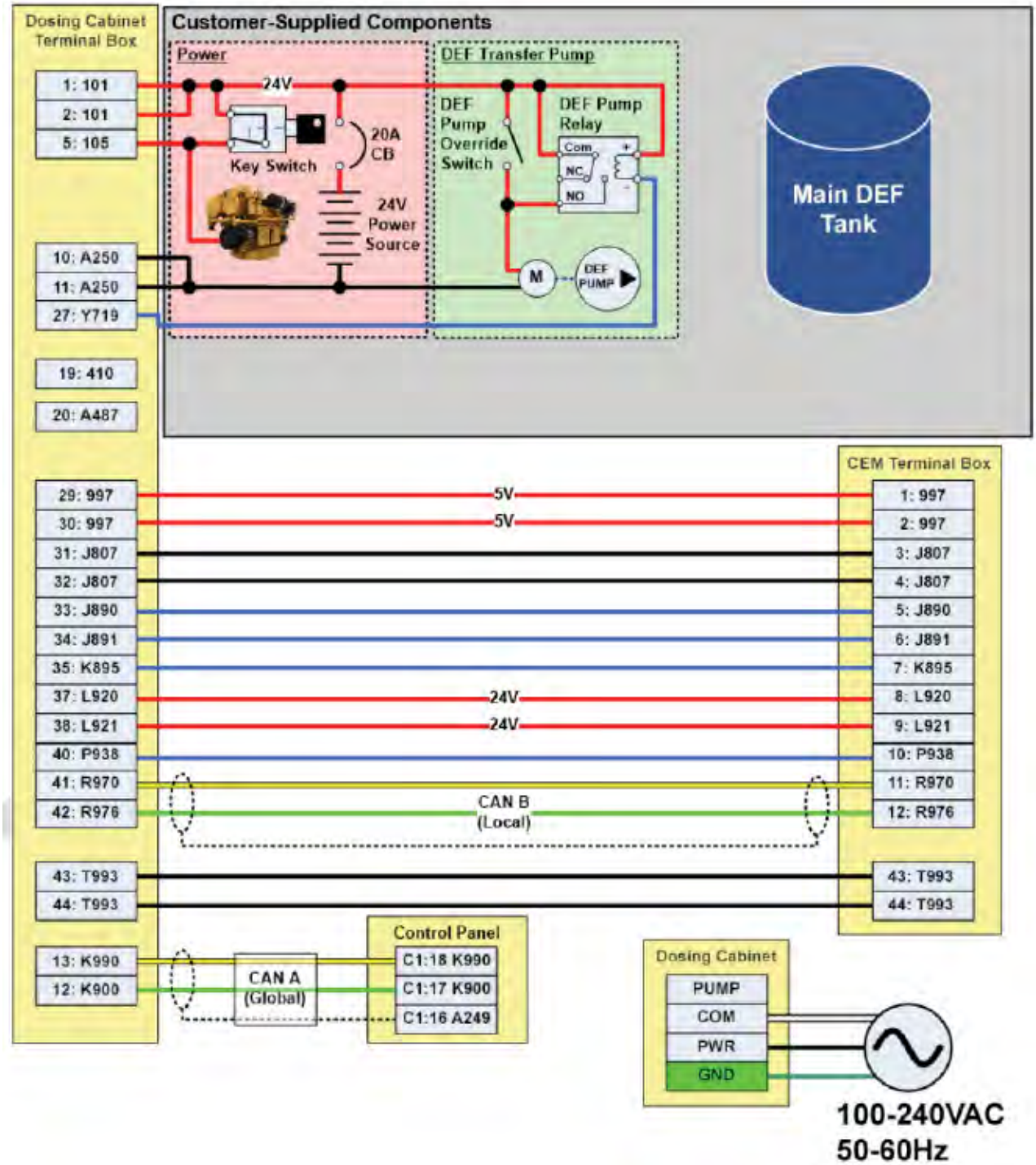

Figure 4.6 – Dosing Cabinet Wiring Diagram

DC Power

Customer-supplied

Main DC Power

A 24VDC power source is required for the CEM system (Figure 4.7). If the 24VDC power source is interrupted during normal operation, the system will not purge or operate properly.

Circuit Breaker

A 20A breaker is recommended for circuit protection of the system.

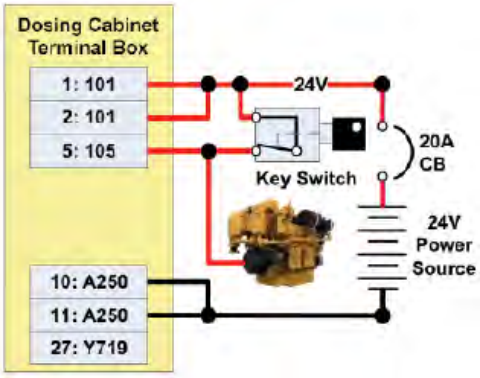

Figure 4.7 – Main DC Power

DEF Transfer Pump

Common Power Source

The DEF transfer pump is supplied by the customer. When the buffer tank level in the dosing cabinet is low, the controller will send a signal on terminal 27 (0V = active) to activate the DEF pump relay. It will also open the cabinet's buffer tank fill valve (Solenoid #3, Figure 2.2). A DEF transfer pump override switch can be installed if desired (Figure 4.8).

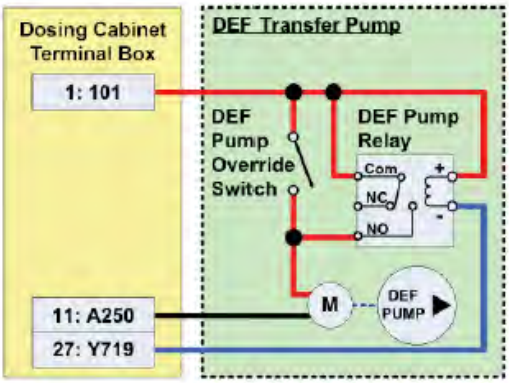

Figure 4.8 – Common DC Power

Independent Power Source

If the DEF transfer pump requires a different voltage, it must be wired as shown in Figure 4.9. The DEF pump relay will still be powered by the dosing cabinet 24V circuits and controlled by the signal on terminal 27, but the DEF transfer pump and DEF pump override switch will be connected to an independent power source.

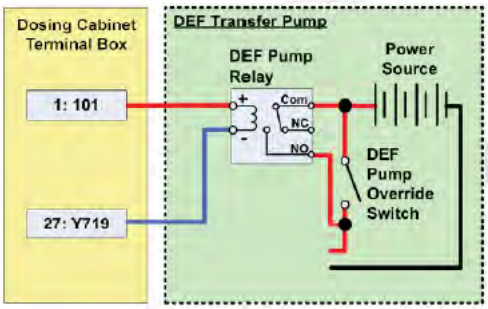

Figure 4.9 – Independent Power Source

Relay

A relay should be used even if using a common power supply, and it needs to be sized for the pump selected.

Override Switch

The optional override switch (Figure 4.8 or Figure 4.9) is recommended in case of relay problems with the DEF transfer pump circuitry.

Keyswitch

A keyswitch is required, and the same keyswitch must be used for the engine and its aftertreatment system. If different keyswitches are used, a mismatch in the state of the different switches can cause the aftertreatment system to be inoperable while the engine is running.

5.0 Cat CEM Communication Network

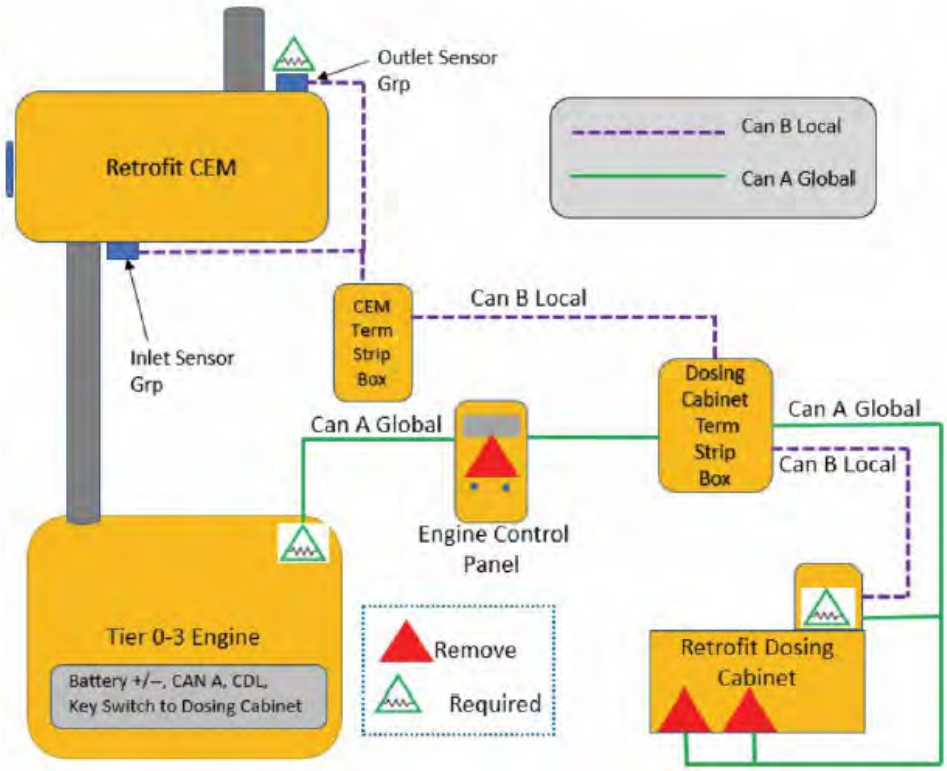

Figure 5.1 – Communication Network and Devices

Control Panels and Displays

There are numerous displays and control panels available from Caterpillar. Refer to your display or control panel A&I Guide for installation and configuration instructions. Check on termination resistors to ensure the correct number of resistor per CAN data link are installed (Figure 5.1).

CDL Circuit

Use twisted pair wires to connect the CDL wiring between the dosing cabinet terminal box and the engine connector. The system will transmit aftertreatment parameters over CDL to the engine ECM, which re-broadcasts them over the J1939 global data link to the control panel and remote displays (Figure 5.2).

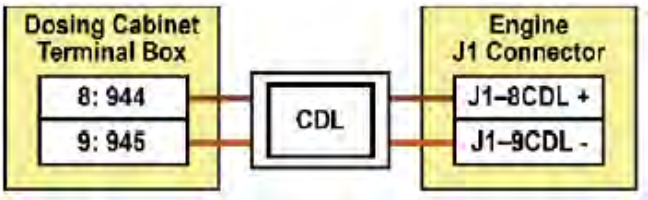

Figure 5.2 – Dosing Cabinet to Engine Data Link

J1939 Circuit

Installation
Use approved J1939 cable to wire between the dosing cabinet terminal box and the CEM terminal box (Figure 5.3).

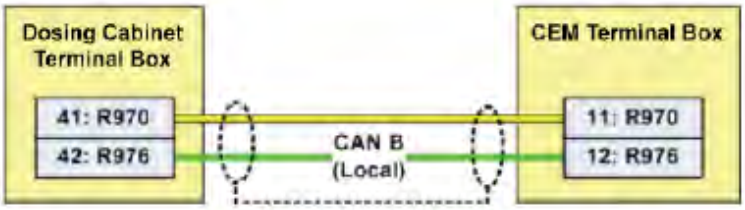

Figure 5.3 – CAN Data

Link SAE J1939/11 – Data Bus Wiring J1939 Data Bus Harness Design
The data bus connector that Caterpillar uses is a modified DT connector, special wedge, cable, and extended socket. The harness assembly requirements are unique to typical Cat wire harnesses. Caterpillar recommends two conductor shielded cable for all J1939 data link wiring. This cable must meet J1939 specifications for conductors. For additional information regarding the electrical system design, see the SAE publication J1939/11 “Physical Layer.” The minimum bend radius for the data bus cable is 40 mm.

J1939 Specifications for Conductors			
	Minimum	Nominal	Maximum
Impedance (ohm)	108	120	132
Capacitance between conductors (pF/m)	0	40	75
Capacitance between the conductors and the shield (pF/m)	0	70	110

Table 5.1 – J1939 Conductor Specifications

For the data bus to function as intended, the following requirements must be identified on the customer wire harness print.

1. Remove 75 mm of the outer jacket of data link shielded cable. (Reference Cat part number 153-2707.)
2. Remove the foil shield from the exposed wires to within 3 mm of the cable jacket end.
3. Crimp gold-plated socket terminals to the wires and the extended socket terminal to the drain wire. Slide heat shrink tube over the cable end. (Reference Cat part number 125-7876.)
4. Install the terminals into the appropriate connector cavity positions.
5. Install the wedge into the connector.
6. Apply the heat shrink tube over the back of the connector body and the jacket of the cable.

The following components and assembly procedures (Figure 5.4) must be used to ensure the cable to connector joint will be sealed. Failure to conform to these requirements will result in cable contamination and loss of shield performance.

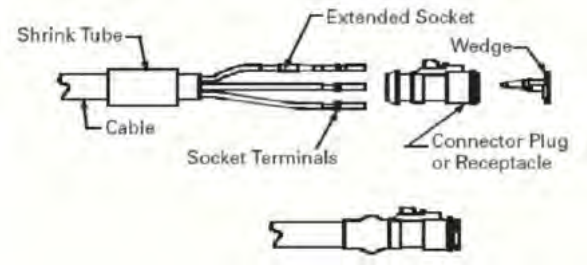

Figure 5.4 – SAE J1939 Connector

Assembly Note: Refer to SAE J1939-11 “Physical Layer” document for more information.

Connecting Modules to the CAN Data Link

The SAE J1939 data link is used to communicate engine information to an SAE J1939 compatible display or other desired SAE J1939 compatible modules. Refer to SENR9764 “Installation Guide for Industrial Electronic Engine Displays” for more information on connecting J1939 displays to Cat industrial engines. The illustration in Figure 5.5 shows multiple J1939 modules properly connected to the J1939 data bus. The key components to note are as follows:

- The total length of the data link between terminal resistors must not exceed 40 m (130 ft).
- Length of each branch, or stub length, must not exceed 1 m (3.3 ft). Reference cable assembly (Cat part number 165-0200) that is 0.15 m long with Deutsch DT 3-pin plug on one end and J1939 signal and shield wires with appropriate crimped socket on the other end for insertion into J1939 module connector.
- All splices and end nodes can be implemented using a connector tee. (Reference Deutsch DT receptacle assembly – Cat part number 133-0970.)
- Two terminal resistors must be installed. One resistor is required at each end of the data link to ensure proper operation. These two terminal resistors are critical for the proper operation of the network. (Reference Deutsch DT plug with integrated termination resistor – Cat part number 174-3016.)

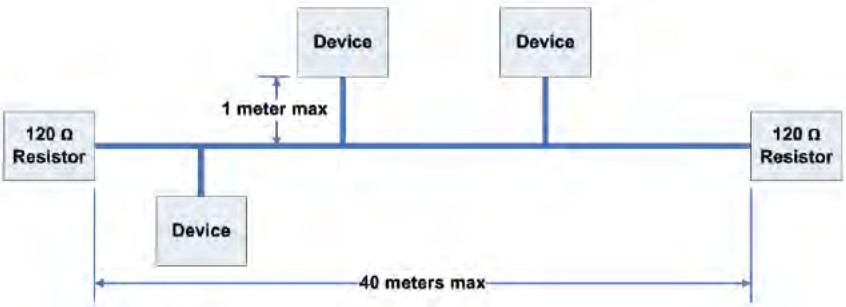

Figure 5.5 – SAE J1939 Multiple Module Installation Example

Terminating resistors – The bus is terminated at each end by 120 ohm resistors.

Bus length – The total bus length must not exceed 40 meters.

Drop length – The drop length to each device on the bus must not exceed 1 meter.

Long Distances
If the project layout does not allow for the standard 40-meter bus, two separate buses can be connected using a J1939 repeater (available through aftermarket suppliers).

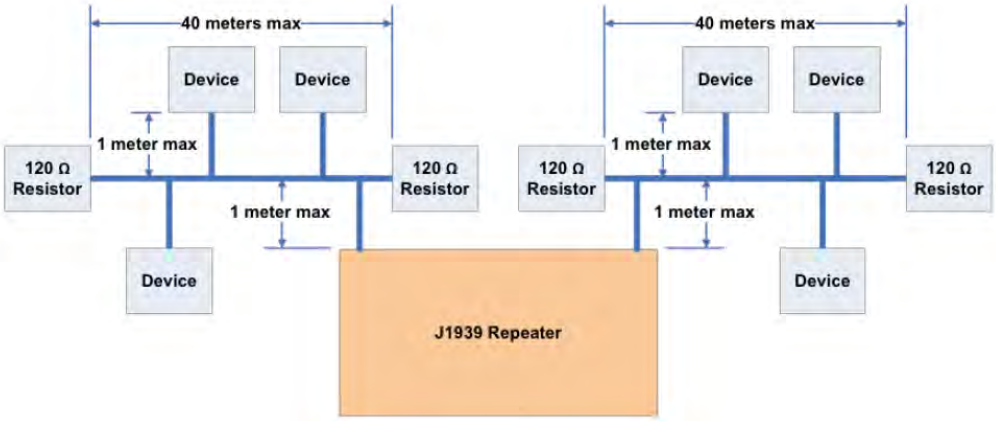

Figure 5.6 – SAE J1939 Multiple Module Repeater Installation Example

1. Two terminal resistors are required. Optional customer harness provides the resistor at the ECM if installed.
2. Maximum stub length = 1 m (3.3 ft).
3. Fabricate 153-2707 cable to length.

Note: If the requirements for J1939 data link connections are met, any number of display modules or service tool connectors may be connected to the J1939 data link.

Note: One terminal resistor for the J1939 data link is included in the optional customer harness. If the optional customer harness is not present, two terminal resistors must be installed. Any J1939 data link must have a terminal resistor at each end of the data link.

Note: A terminal resistor is required at the terminal ends of the data link cable. A terminal resistor is not required at each node on the data link.

Parameters

The table below shows the aftertreatment parameters on the J1939 bus. Scaling is not required on industrial protocol parameters. Parameter values are pre-scaled using 32-bit float. Status parameters are 16 bits.

Modbus Status & Parameter Channels

Display Attribute (UI Text)	Modbus Address	Modbus Data Type	SPN	PGN	Units	Scaling	Offset	"Low limit"	"High Limit"	Input	Notes
Engine Speed	40100	UINT16	190	61444	RPM	0.125	0	0	8031.875	ANALOG	0 to 8031.875 rpm Engine CANA
Engine Fuel Rate	40607	UINT16	183	65266	LITERS/HR ($0mm^3$)	0.05	0	0	3212.75	ANALOG	Metered Fuel Rate on Engine CANA
Engine IMT Temp (Boost Temp)	40112	UINT8	105	65270	Â°C	1	-40	-40	210	ANALOG	-40 to 210 Â°C Engine CANA
Engine IMP Press (Boost Press)	40150	UINT8	102	65270	kPa	2	0	0	500	ANALOG	0 to 500 kPa Engine CANA
Barometric Pressure	44881	UINT8	108	65269	kpa	0.5	0	0	125	ANALOG	Currently measure Baro Pressure – Engine CANA
System Hours	40152	UINT32	8629	64585	SEC	1	0	0	4211081215	ANALOG	Counts hours when engine rpm is >200
Aftertreatment System Enable Status	44391	UINT2	7851	33024	N/A	1	0	0	3	DISCRETE	Enabled or Disabled
Aftertreatment 1 SCR System Hydrocarbon	44392	UINT8	7934	64514	0 - 250%	1	0	0	250	ANALOG	0 - 250% Hydrocarbon loading
Aftertreatment #1 SCR Cabinet Air Temperature	44394	N/A	N/A	N/A	C	N/A	N/A	N/A	N/A	ANALOG	0 – 1500 C Ambient temp around Cabinet
Desired Aftertreatment #1 SCR Catalyst Conversion Efficiency	44396	N/A	N/A	N/A	%	N/A	N/A	N/A	N/A	ANALOG	Configured during commissioning to meet site permit.
Aftertreatment 1 Supply Air Pressure	44398	UINT16	3485	64927	kpa	0.1	0	0	6425.5	ANALOG	65 +/-5psi is the set pressure when Air Assist valve is open = 100%
Aftertreatment 1 SCR System 1 State	44400	UINT16	4332	61475	1 thru 14	1	0	0	15	DISCRETE	1=Dormant, 2=N/A, 3=Thaw State, 4=Check Air Assist Valve(Air), 5=Check DEF Return Valve, 6=Priming pump to Tank(Manifold), 7=Priming Pump to Nozzle, 8=Normal Dosing, 9=Wait debounce Dosing Off Mode, 10=Nozzle purge, 11=N/A, 12=Mini purge(Engine no load/Idle), 13=N/A, 14=N/A (Some states are not available depending on application and hardware configuration.)
Aftertreatment 1 SCR Dosing Air Assist Valve	44401	UINT8	4336	64833	0/100%	0.4	0	0	100	ANALOG	0 = Closed, 100 = Open, NC - Normally Closed Actuator/Valve
Aftertreatment 1 Diesel Exhaust Fluid Doser 1 Temperature	44403	N/A	N/A	N/A	%	N/A	N/A	N/A	N/A	ANALOG	N/A on Retrofit units
Aftertreatment 1 SCR Intake Temperature	44405	UINT16	4360	64830	C	0.03125	-273	-273	1734.96875	ANALOG	Ambient temp to 500C is normal operating range.
Aftertreatment 1 SCR Outlet Temperature	44407	UINT16	4363	64830	C	0.03125	-273	-273	1734.96875	ANALOG	Ambient temp to 500C is normal operating range.
Aftertreatment 1 DEF Pump Drive %	44425	UINT8	4375	64828	0 - 100%	0.4	0	0	100	ANALOG	Pump Drive Command Percentage
Aftertreatment 1 SCR Conversion Efficiency	44409	UINT8	4364	64878	0 - 100%	0.4	0	0	100	ANALOG	0-100% Nox Conversion Efficiency. Values = FFFF until all systems are in normal operating temps and pressures.
Aftertreatment 1 Diesel Exhaust Fluid Quick Thaw Tank Volume	44411	UINT8	4367	64829	0 - 100%	0.4	0	0	100	ANALOG	0% = Empty, 100% = Overfull Tankfill valve opens at 62% and closes at 92%. During normal operation DEF Tank Should be; 62 & 92%
Aftertreatment 1 Diesel Exhaust Fluid Quick Thaw Temperature	44413	UINT8	4368	64829	C	1	-40	-40	210	ANALOG	11 Deg C is the Freezing point of DEF
Aftertreatment 1 Diesel Exhaust Fluid Dosing Unit 1 Diverter Valve	44415	UINT8	4376	64828	0/100%	0.4	0	0	100	ANALOG	0% = Open, 100% = Closed, NO - Normally Open Actuator/Valve. Open - DEF Returns to Buffer Tank (Purge), Closed - when dosing pump operates DEF will flow to Nozzle and dose into CEM.
Aftertreatment 1 Diesel Exhaust Fluid Tank Fill Valve Command	44417	UINT8	5434	64828	0/100%	0.4	0	0	100	ANALOG	0 = Closed, 100 = Open, NC - Normally Closed Actuator/Valve. Open - DEF that is supplied to Dosing cabinet will flow to Buffer tank. Closes at 92% Tank volume, Opens at 62%. 5 attempts to fill DEF Tank.

Modbus Status & Parameter Channels *(contd)*

Display Attribute (UI Text)	Modbus Address	Modbus Data Type	SPN	PGN	Units	Scaling	Offset	"Low limit"	"High Limit"	Input	Notes
Aftertreatment 1 Total Diesel Exhaust Fluid Used	44419	UINT32	5963	64701	liters	0.5	0	0	2105540608	ANALOG	Cumulative Liters of DEF used.
Aftertreatment 1 SCR Intake Pressure	44421	UINT16	6586	64831	kpa	0.1	-3212.7	-3212.7	3212.8	ANALOG	0-2psi is operational kpa
Aftertreatment 1 Diesel Exhaust Fluid Dosing Pressure	44423	UINT8	6875	64590	kpa	4	0	0	1000	ANALOG	Purge = 3 - 5psi, Normal Dosing = 40 - 160psi, Lines to Injector primed = 100 psi
Aftertreatment 1 Outlet Corrected NOx	44276	UINT16	7351	64782	0-1500 ppm	0.05	-200	-200	3012.75	ANALOG	Corrected level of NOx 1500 is high end of accuracy range
Aftertreatment 1 Intake Corrected NOx	44278	UINT16	7353	64784	0-1500 ppm	0.05	-200	-200	3012.75	ANALOG	Corrected level of NOx 1500 is high end of accuracy range

Modbus Alarms & Warnings

Alarm/Warning Function Code	Address	Bytes	Read/Write	Description
3	45000	2	R	Diagnostics Update Count
3	45001	2	R	Events Update Count
3	45002	2	R	Public J1939 DTC Update Count
3	45003	2	R	Lamp Information Register
3	45004	2	R	Malfunction Indicator Lamp Status
3	45005	2	R	Flash Malfunction Indicator Lamp Status
3	45006	2	R	Red Stop Lamp Status
3	45007	2	R	Flash Red Stop Lamp Status
3	45008	2	R	Amber Warning Lamp Status
3	45009	2	R	Flash Amber Warning Lamp Status
3	45010	2	R	Protect Lamp Status
3	45011	2	R	Flash Protect Lamp Status
3	45012	2	R	CDL Level 1 Diagnostics Count
3	45013	2	R	CDL Level 2 Diagnostics Count
3	45014	2	R	CDL Level 3 Diagnostics Count
3	45015	2	R	CDL Level 1 Event Count
3	45016	2	R	CDL Level 2 Event Count
3	45017	2	R	CDL Level 3 Event Count
3	45018	2	R	Active CDL Diagnostics Count
3	45019	2	R	Logged CDL Diagnostics Count
3	45020	2	R	Active CDL Events Count
3	45021	2	R	Logged CDL Event Count
3	45022	2	R	Active J1939 DTC Count
3	45023	2	R	Logged J1939 DTC Count
3	45024	2	R	Module Active CDL Diagnostics Entry 1-Diagnostics Key

Blue – Comes from display

Yellow – Comes from engine

Green – Supported in Stationary Retrofit SCR Software

Diagnostics

In addition to the parameters listed above, the following SPNs can be transmitted as diagnostic messages (DM1).

Parameter Name	SPN
Battery Potential/Power Input #1	168
Ambient Air Temperature	171
Engine Exhaust Gas Temperature	173
Calibration Memory	630
Calibration Module	631
J1939 Network #1	639
J1939 Network #2	1231
Aftertreatment #1 DEF Tank Volume #1	1761
Engine Exhaust Manifold Bank #1 Temperature #1	2434
Aftertreatment #1 Intake NOx	3216
Aftertreatment #1 Intake O2	3217
Aftertreatment #1 Outlet NOx	3226
Aftertreatment #1 Outlet O2	3227
Aftertreatment #2 Outlet NOx	3265
Aftertreatment #2 Outlet % O2	3266
Aftertreatment #1 DEF Controller	3360
Aftertreatment #1 DEF Dosing Unit Input Lines	3362
Sensor Supply Voltage 1	3509
Sensor Supply Voltage 2	3510
Aftertreatment #1 DEF Concentration	3516
Aftertreatment #1 SCR Dosing Air Assist Absolute Pressure	4335
Aftertreatment #1 SCR Catalyst Conversion Efficiency	4364
Aftertreatment #1 Identification	5576
Aftertreatment #1 Intake Gas Sensor Power Supply	5758
Aftertreatment #1 Outlet Gas Sensor Power Supply	5759
Aftertreatment #1 SCR Intake Absolute Pressure	6797
ECU Interface Mismatch	6806
Aftertreatment #1 Inconsistent Configuration Detected	7105
Aftertreatment #1 DEF Pump	7107
Aftertreatment #1 DEF Pump Power Relay	7416
Aftertreatment #1 DEF Control Module Circuit Breaker	7417
Aftertreatment #1 SCR System Sulfation Level	7504

Cat ET Configuration File Programming

Connect Cat ET to the engine service tool connector. Configure the engine serial number as shown below circled in red.

Description	Value	TT
ECM Identification Parameters		
Engine Serial Number	SBK02098	1
ECM Serial Number	31356195RH	
Software Group Part Number	5335970-00	
Software Group Release Date	10Mar	
Software Group Description	50wLab3516CesLabTestHcCali	
Engine Type		
Rating Number	4	
Test Spec	3516	
Engine Rating Interlock	Unavailable	
Aftertreatment Configuration		
Factory Installed Aftertreatment #1 Identification Number	EH900014	1
Aftertreatment DEF Pump Electronics Tank Unit Identification Number	EH900014	1
Aftertreatment #1 NOx Sensor Installation Status	Installed	0
Aftertreatment #1 DEF Concentration Configuration	32.5 %	1
Desired Aftertreatment #1 SCR Catalyst Conversion Efficiency	90 %	1
Aftertreatment System Enable Status	Enabled	0
Aftertreatment System Configuration Group Code	FY	1

The next four parameters (inside the red border) will configure automatically on the initial ET connection.

Description	Value	TT
ECM Identification Parameters		
Engine Serial Number	SBK02098	1
ECM Serial Number	31356195RH	
Software Group Part Number	5335970-00	
Software Group Release Date	10Mar	
Software Group Description	50wLab3516CesLabTestHcCali	
Engine Type		
Rating Number	4	
Test Spec	3516	
Engine Rating Interlock	Unavailable	
Aftertreatment Configuration		
Factory Installed Aftertreatment #1 Identification Number	EH900014	1
Aftertreatment DEF Pump Electronics Tank Unit Identification Number	EH900014	1
Aftertreatment #1 NOx Sensor Installation Status	Installed	0
Aftertreatment #1 DEF Concentration Configuration	32.5 %	1
Desired Aftertreatment #1 SCR Catalyst Conversion Efficiency	90 %	1
Aftertreatment System Enable Status	Enabled	0
Aftertreatment System Configuration Group Code	FY	1

Completing the Configuration Programming for Customer and Site Emissions Permit

- Work from top down of ET configure file and input values that are missing as shown in the figure below.
- Select rating: 1 is C27 and goes up sequentially.**
- Once all sensors and boxes are plugged in, change them on config to: Installed.**
- Test DEF concentration and input the value.**
- Input desired aftertreatment SCR catalyst conversion efficiency.**
- Enable the system.**
- Aftertreatment code is input at Factory (red border). If missing, contact product support rep.

Description	Value	TT
ECM Identification Parameters		
Engine Serial Number	SBK02098	1
ECM Serial Number	31356196RH	
Software Group Part Number	5335970-00	
Software Group Release Date	10Mar	
Software Group Description	50wLab3516CesLabTestHcCali	
Engine Type		
** Rating Number	4	
Test Spec	3516	
Engine Rating Interlock	Unavailable	
Aftertreatment Configuration		
Factory Installed Aftertreatment #1 Identification Number	EH900014	1
Aftertreatment DEF Pump Electronics Tank Unit Identification Number	EH900014	1
** Aftertreatment #1 NOx Sensor Installation Status	Installed	0
** Aftertreatment #1 DEF Concentration Configuration	32.5 %	1
** Desired Aftertreatment #1 SCR Catalyst Conversion Efficiency	90 %	1
** Aftertreatment System Enable Status	Enabled	0
Aftertreatment System Configuration Group Code	FY	1

Verifying Current Software Revision

Using the dosing cabinet software number listed in Cat ET, open SIS and verify that this is still the latest software part number. (If an update is made later, all parameters that have been configured will remain configured after the software update.)

Commissioning

Refer to the last section of this publication or consult UENR4339 for additional commissioning information and a copy of the commissioning document.

6.0 Appendices

Appendix A – Serial Number Plate Locations

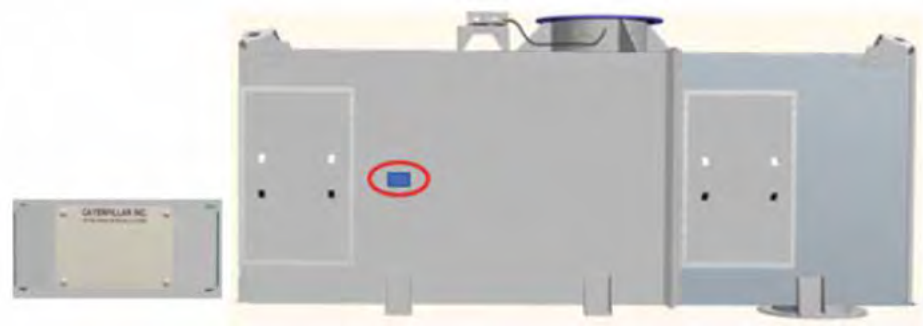

CEM Serial Number Plate Location

Dosing Cabinet Serial Number Plate Location

It is essential that the serial number plates for the CEM and dosing cabinet match as shown in the example below (serial numbers and common arrangement numbers).

Dosing Cabinet Serial Number Plate

CEM Serial Number Plate

Appendix B – DEF Handling

Refer to the MSDS provided by your DEF supplier or the Caterpillar Fluid document PELJ1160-01 for additional information on DEF fluids.

The ammonia, which is soluble in the liquid, will cause the corrosiveness of DEF solution to increase as it ages due to its increasing concentration. That is, a higher ammonia concentration makes it more caustic. Note that high storage temperatures increase the rate of this decomposition.

Since DEF liquid is caustic, delivery and storage require materials that are not susceptible to corrosion.

Recommended Installation Materials:

- Stainless steel
  - 300 series: OK
  - 400 series: Slow corrosion
  - Corrosion rate increases with temperatures > 60°C
- Plastics

Materials to Avoid:

- Unalloyed steel
- Aluminum
- Brass
- Galvanized steel
- Copper

Eye contact may cause mild eye irritation, including stinging, watering, and redness. Wear safety glasses. Safety shield may be needed in some conditions.

Skin contact may cause mild skin irritation including redness and burning. No harmful effects from skin absorption have been reported. Use rubber gloves to prevent skin contact (all rubber types OK).

Vapor inhalation may cause irritation leading to cough or difficulty breathing.

Note: Contact hazards are from the caustic pH (7.5 to 10) factor of solution. DEF in solution slowly decomposes into ammonia, causing the caustic reaction. “Aged” DEF solution is more caustic (high pH) than “fresh.”

Leaks and/or Spills
There is visible evidence should a leak occur (see picture):

- DEF stalactites and stalagmites
  - Formed from slow leaks and evaporation of water
  - Rate of water evaporation determines size of crystal formation
- Need to verify that joints are tight
  - Stop leaks when first noticed
  - Solid DEF will continue to accumulate
  - DEF solution is corrosive to steel and other metals
- Solid DEF is water soluble
  - But… may be slow to get into solution
- Clean up spills and leaks before components can corrode
  - Minor spills: Use paper towels or absorbent mat
- Solid DEF is highly water soluble
  - Hot water will re-dissolve solid DEF faster
  - Small amount of soap or detergent in hot water may enhance clean up
  - Plenty of hot water is key to removing dry DEF
- DEF solution contains small amount of ammonia
  - Skin irritant
  - Wear gloves

Appendix C – Dosing Cabinet Symbols

Air In – Compressed air in from its source.

Air Out – Compressed air out to the injector.

DEF In – DEF in from the main tank

DEF Out – DEF out to injector

CAUTION: 100-240Vac 50/60Hz
Electric Power Present

DEF Vent – DEF Vent Port

Connector to Engine ECM – 23 Pin Connector

OEM Connector – 14 Pin Connector to main DEF tank (level sensor / transfer pump)

Connector to CEM – 21 Pin Connector

Grounding Point

The Below Lights are on the Pump Control Panel inside the Dosing Cabinet

Pump Operating – the green light indicates that the dosing pump is running.

Shut Down – a red light indicates that the system has received a shutdown event, and the closing pump has stopped.

Appendix D – Aftertreatment Commissioning Checklist

For S/N Prefixes: ESF, EH6, EH7, EH8 & EH9 ONLY

1. This is a Prime Product: All information and files, refer to aftertreatment common arrangement serial number
2. Use latest version of Cat ET and flash files in SIS Web using aftertreatment common arrangement serial number
3. Perform all service letters, service magazines, or engine news prior to commissioning
4. All warranty claims on this system should be made against the aftertreatment common arrangement serial number
5. COMM adapter with LAN port is needed to communicate with dosing cabinet
6. Cat aftertreatment system must be registered, following REHS5097
7. Exhaust system design use LEBW4970 A&I Guide - Exhaust Systems
8. Generator set must be capable of block loads: 70, 80, 90, and 100% for extended periods of time during commissioning. Using same load on all points may be required
9. Technician Toolbox™ needed to download data from Product Link™ controller
10. Power cycle dosing cabinet, interrupt ALL power to dosing cabinet (unlatch all codes)
11. Interrupt keyswitch circuit for 15 sec to force non-volatile memory (NVM)
12. Complete pre-commissioning section before attempting tests
13. Active Code: 4332-11 will remain active until both Aftertreatment System Functional Test (ASFT) & Commissioning Service Test are successful. Then, cycle keyswitch to aftertreatment ECM, forcing NVM save in ECM
14. Save a product status report via Cat ET when successfully commissioned and ASFT are both successful
15. Once all steps are completed and engine is in standby, perform a keyswitch cycle again
16. Match: CEM common arrangement serial number with dosing cabinet common arrangement serial number, they must match!

Retrofit SCR – Service Information: EH6, EH7, EH8 & EH9

- LEBE0035 Application and Installation Guide
- M0075634 Operation Maintenance Manual
- M0070376 Systems Operation/Testing and Adjusting Manual
- M0081346 Disassembly and Assembly Guide
- M0077572 Parts Book
- UENR4339 Aftertreatment System Commissioning Report
- UENR4742 Schematic – Retrofit SCR Electrical System
- UENR7845 Schematic – Retrofit SCR Display Electrical System
- REHS8151 NOx Sensor Handling Guide
- M0077328 Asset IQ A&I Guide (For Mechanical Engines)
- Insulation blanket installation procedure special instructions are available on SIS Web. Due to design changes, they are serial number specific.

Aftertreatment Commissioning Checklist

Section 1: Site and Machine Setup			
Site & Machine Information			
In Service Date:		Config Group: 2 digits	
Site Name:		Primary DEF Filter Grp:	
Servicing Dealer:		Aftertreatment Flash File:	
Engine Model S/N:		Product Link Config File:	
Aftertreatment Package S/N:		Product Link Flash File:	
CEM S/N:		CAN A Global Ohms:	
Dosing Cabinet S/N:		CAN B Local Ohms:	

Pre-Commissioning Check List – Aftertreatment Installation and Setup		
Y	**N**	**Description: If answered No, describe in Notes section – Use LEBE0035 for more detailed information**
		1. Match CEM S/N to dosing cabinet S/N: Must match for each system
		2. Install CEM insulation blankets prior to CEM being lifted into place: (if no blankets, skip to step 4)
		3. Install same sensor groups from step 2, NOx probe protruding blanket, do not cover wire harnesses
		4. Install CEM: Rig and lift in place, use torque collars installed on each mounting foot per A&I Guide
		5. Install exhaust piping from engine out to CEM inlet/bellows – LEBW4970
		6. Commission engine, generator, and switchgear prior to Aft system startup: Aft powered down
		7. Install and open-air supply to dosing cabinet. Verify supply air meets A&I specs for air consumption
		8. Install air and DEF lines kits from dosing cabinet to injector, with gradual fall to dosing cabinet
		9. Verify DEF transfer pump meets specs in A&I. If Cat DEF transfer pump skid is used: Skip to 15
		10. Wire DEF transfer pump switch – Term 18 & 27 in dosing cabinet term box to control transfer pump
		11. Install DEF filter grp after transfer pump
		12. Install DEF pressure relief valve if needed. IF tank fill valve fails to open and not fill tank. (optional)
		13. Flush DEF supply lines to dosing cabinet into a suitable container and dispose of DEF properly
		14. Fill dosing cabinet buffer tank, using tank fill override: Check for leaks
		15. Fill DEF bulk tank with 32.5 or 40% technical grade DEF and meets ISO 22241-1 (See item 26)
		16. Wire electrical supply to dosing cabinet and breaker closed. Pump powered 120-208VAC/50-60hz
		17. Wire electrical connections between CEM and dosing cabinet terminal strip boxes are complete
		18. Wire battery power & keyswitch to dosing cabinet terminal box. Refer to A&I Guide for reference
		19. Wire data link CAN A & CDL from dosing cabinet term box to engine or EMCP: Data link/J1939
		20. Wire data link CAN B interconnect: dosing cabinet term box & CEM terminal box: Data link/J1939
		21. Remove resistors: global & local data links have 2 terminating resistors per data link – see A&I
		22. Download and perform: Service letters or magazine or engine news before proceeding
		23. Adjust air regulator in dosing cabinet to 65 psi. With air supply valve open (air flowing) M0070376
		24. Record air supply & DEF supply pressure at dosing cabinet – before strainers
		25. Troubleshoot and clear active codes before running engine or attempting commissioning M0070376
		26. Configure in ET: Enter Aft ECM parameters: (Enter DEF % from item 10) M0070376
		27. Configure in ET: Enter Product Link ECM site parameters: Unit and necessary parameters
		28. Configure in ET: Enter site emissions regulation via site permit – Enter in Section 2 below also
		29. Power cycle dosing cabinet prior to commissioning attempt
Notes:		

Aftertreatment Commissioning Checklist

Section 2: Input All Data Points							
Permit Site Emissions equirement (Quote)		Desired Target set in Cat ET:		DEF Supply Press to Cabinet		Air Supply Pressure to Cabinet (A&I)	
Engine Load Factor Steps	Boost Press	CEM Inlet Pressure	SCR Outlet Temp	SCR Inlet Temp	Pump Output %	EO Analyzer NOx ppm (optional)	CEM Stack Out Analyzer-NOx ppm (optional)
1st 100%							
2nd 90-100%							
3rd 80-100%							
4th 70-100%							

Aftertreatment Commissioning Steps	
Aftertreatment Commissioning Steps and Tests	
1	Start engine and apply 100% load to engine – allow to stabilize 45-60 min or <50-degree delta
2	Start air compressor and DEF transfer pump
3	Perform system communication test in Cat ET
4	Troubleshoot active codes & events. 4332-11 will only clear upon successful commissioning
5	Ensure DEF buffer tank in dosing cabinet is full using overrides in Cat ET or manually filling
6	Override air assist valve ONLY: Record pressures. Air supply: 65
7	Override air valve & DEF valve: Record pressures. Air supply: 65
8	Once correct pressures and temps (290°C) are achieved, the system will attempt to dose
9	Perform ASFT: This test takes approx. 15 min to pass
10	Start commission process – Cat ET. Service>Service procedure>Aftertreatment Test. Press Start
11	Perform commissioning. Allow Cat ET to calibrate all 4 steps. May need same load for all steps
12	Record if Code 4332-11 cleared: 3 failed tests, contact your TC for further assistance
13	Once engine is off and all codes are clear, interrupt keyswitch to AFT ECM for 15 sec. (NVM Save)
14	On Cat ET download and save a copy of PSR and ECM Configuration and Datalog from VIMSpc

Commissioning Sign-Off			
I acknowledge the SCR system is operating properly and all settings are as stated.			
Dealer Technician:		Date:	

Retrofit Aftertreatment Systems Assistance
Use the Cat Dealer Service Network

LEBE0035-07 (12-22)

©2022 Caterpillar.
All rights reserved.

CAT, CATERPILLAR, LET'S DO THE WORK, their respective logos,
DEO-ULS, Product Link, "Caterpillar Corporate Yellow", the "Power Edge" and Cat "Modern Hex"
trade dress as well as corporate and product identity used herein, are trademarks of Caterpillar and
may not be used without permission.

CEM Installation					
Conduit			Conductor		
No.	From	To	QTY	Size	Function
1	CEM term box	Dosing Cabinet term box	16	#14 AWG	DC Power & Signals
			1	J1939 (Northwire FJ1939182-005)	Communications
2	EMCP	Dosing Cabinet	1	J1939 (Northwire FJ1939182-005)	Communications
			3	#14 AWG	DC Power & Signals

CARTER POWER SYSTEMS

Section Six
Custom Enclosure

Custom Enclosure
Fuel Tank Support Docs

Paint Spec

4545 FM 775 Seguin, TX 78155
10310 Fischer Rd, Von Ormy, TX 78073
830-900-3190
contact@tomballcontrols.com
www.tomballcontrols.com

Table of Contents

1. General Overview
2. Concept Drawings
3. Components
4. Lifting Diagrams
5. Warranty Statement

4545 FM 775 Seguin, TX 78155
10310 Fischer Rd, Von Ormy, TX 78073
830-900-3190
contact@tomballcontrols.com
www.tomballcontrols.com

1

General Overview

4545 FM 775 Seguin, TX 78155
10310 Fischer Rd, Von Ormy, TX 78073
830-900-3190
contact@tomballcontrols.com
www.tomballcontrols.com

Revision History

Revision	Date	Description
A	12/20/2024	Initial Submittal Package
B	3/26/2025	Revised Submittal Package Addressing Comments
C	4/24/2025	Revised Submittal Package Addressing Comments
D	9/15/2025	Revised Submittal - As Built Submittal Package

4545 FM 775 Seguin, TX 78155
10310 Fischer Rd, Von Ormy, TX 78073
830-900-3190
contact@tomballcontrols.com
www.tomballcontrols.com

Date: 3/26/2025

Quote number: 1061

Customer Name: Carter Cat

Customer Contact: Maria Drybread

Project Name: Hyperion (AKA Cloud) Side by side units

Generator: Cat C175-16 3000KW 480V or Cat 3516E 3000KW 480V (Package designed for both

Generator models being's dimensions & fuel consumption are similar)

Enclosure Description

- 4" 12GA Galvanneal sound attenuated weather protective enclosure
- Dimensions of enclosure 600"L x 156"W x 141"H Weight 34,700LB's
- Walk-In Style 75dBA @ 23' (Free Field) Based on Cat sound data
- 4" 8Lb mineral wool insulation with perforated liner
- Externally mounted Cat SCR W/ TC supplied exhaust to SCR pipe
  (SCR supplied by CAT and installed by TC on exterior of the enclosure - plumbed and wired)
- (4) Single Enclosure access doors 48"W x 84"H (Per Enclosure)
- (1) Single Enclosure Discharge Plenum door 24" W x 48"H (Per Enclosure)
- Door hardware panic push rod, all hinges and hardware SS, Drip rails above each doorway, door hold back on each door and all doors gasketed
- Horizontal Air discharge plenum W/ Gravity radiator discharge louvers
- intake W/ fixed air intake louvers W/ Rodent screen, 48" sound baffles & 120V motorized intake dampers inside
- 150A 480V Load Center for all 480V Equipment Loads
- 30 KVA 480/120/208V Transformer W/ Disconnect
- 100A 120/208 Load Center
- (4) Interior AC LED lights W/ (2) GFCI's and (2) 3-way lights switches
- 5KW Enclosure space heater W/ Thermostat
- (1) External E-Stop Station, per enclosure
- DC Lights W/ (1) Timer Switch wired to Gen. Batteries
- Install & Cable Carter supplied 4000A Breaker Cabinet to Gen.
- Wire Gen. JWH and Gen. Condensate heater to enclosure AC Panel
- Install & wire Carter supplied battery chargers
- Install Carter supplied batteries inside each enclosure W/ TC supplied
- battery racks
- Mount & Plumb customer generator W/ Carter supplied isolators
- Finish Enclosure with epoxy primer and urethane topcoat (Tomball White)

4545 FM 775 Seguin, TX 78155
10310 Fischer Rd, Von Ormy, TX 78073
830-900-3190
contact@tomballcontrols.com
www.tomballcontrols.com

Fuel Tank Description

- UL142 Listed 5,000 Gallon (24HR) subbase fuel tank W/ 550 Gallon Def tank built into subbase tank and removable
- Dimensions 600"L x 156"W x 20.50"H Weight 26,400LB's
- Fuel supply and return ports sized for generator with TC fuel lines
- 7.5 Gallon Spill box on fill port W/ 4"NPT 95% OPV
- 90% High fuel alarm panel located at fill port
- Emergency Vents for main and secondary tank
- Atmospheric Vent on main tank 12' above grade (Shipped Loose)
- (1) AXI fuel polishing system W/ ports on opposite ends of tank for recirculating fuel (Wired to load center & pre plumbed for connection once on site)
- (4) Spare 2" NPT ports for customer use onsite
- 50% Low fuel level alarm pre-wired to EMCP panel
- Rupture Basin alarm pre-wired to EMCP panel
- Finish with epoxy primer and urethane topcoat (TC Black)

Notes

1. Carter Cat shall mount, plumb, and fill the ship loose radiator at their facility and perform load testing. Once tested the Gens
will ship to TC facility for packaging.

2. Each unit will be mated up to a second unit creating a side-byside package in the end. Note there will be Left and Right-side
units. All packages will mirror each other with breakers facing exterior of their respective sides.

Weights & Dimensions

- 3MW (The 3516s - 3MW) will ship in 1 piece (radiator/generator, enclosure, fuel tank, Urea tank) with the SCR separately.)
- Weight of unit as shipped without fuel: 113,00 lbs
- Weight of the unit as shipped with fuel: 158,00 lbs
- Dimensions of unit as shipped: 600" L x 163" W x 167" H

4545 FM 775 Seguin, TX 78155
10310 Fischer Rd, Von Ormy, TX 78073
830-900-3190
contact@tomballcontrols.com
www.tomballcontrols.com

Scope of Supply

The following table summarizes Tomball Controls major scope of supply for this project. The tables include a list of major parts that define the party responsible for supplying the component

Description	Carter Supply	Tomball Supply	Notes
Cat 3516E - 3000 KW Generator Set	X		
Battery Chargers	X		
SCR System & Components	X		
DEF Tank for SCR System		X	
Seismic Vibration Isolators	X		
12V Batteries	X		
Fuel Polisher	X		
Battery Best Selector	X		

4545 FM 775 Seguin, TX 78155
10310 Fischer Rd, Von Ormy, TX 78073
830-900-3190
contact@tomballcontrols.com
www.tomballcontrols.com

2

Concept Drawings

Bill of Material (Per Enclosure)

NBR	QTY	DESCRIPTION
1	3	FIXED INTAKE LOUVERS W/ ALUMINUM BIRD SCREEN
2	24	SOUND BAFFLES ON INTAKE AND DISCHARGE END
3	2	48" X 84" 12 GA. DOORS W/ PANIC HARDWARE
4	8	8" POLAR SS HINGES
5	1	RADIATOR DISCHARGE TRANSITION w/ BELTING
6	1	PERFORATED GALVANIZED INNER LINER
7	1	FIRE RATED ACOUSTICAL BAT INSULATION
8	8	ENCLOSURE MOUNTING PLATES FOR LIFTING
9	3	DOOR HANDLES
10	3	DOOR STRIKER
11	3	EMERGENCY PANIC BUTTTON
12	3	6" SS DOOR HOLD BACKS W/ LATCH
13	3	RAIN GAURDS OVER EACH ENTRY DOOR
14	4	RADIATOR DISCHARGE BIRD SCREEN
15	1	DISCHARGE PLENUM ACCESS DOOR
16	2	48" INTERIOR VAPORTITE FIXTURES WIRED TO 3 WAY SWITCH
17	2	48" INTERIOR VAPORTITE FIXTURES W/ BATTERY BACK UP WIRED TO 3 WAY SWITCH
18	12	12V BATTERIES 4W X 3H
19	3	BATTERY RACKS
20	2	CUSTOMER SUPPLIED BATTERY CHARGER
21	1	BEST BATTERY SELECTOR
22	3	3 WAY INTERIOR LIGHT SWITCH W/ SS COVER
23	2	20A GFCI INTERIOR OUTLET W/ SS COVER
24	2	EXTERIOR PHOTOCELL LIGHTS WIRED TO SWITCH
25	1	5 KW HEATER
26	1	THERMOSTAT (HEATER)
27	4	MOTORIZED LOUVERS
28	1	THERMOSTAT (MOTORIZED LOUVERS)
29	1	ENCLOSURE SHORE POWER STUB UP
30	1	GENERATOR ELECTRICAL STUB UP
31	1	480/120/208V 3PH 30KVA MPZ
32	2	24V DC LIGHTS
33	1	90 MIN. TIMER DC LIGHTS
34	1	EXHAUST FAN
35	1	EXHAUST FAN (THERMOSTAT)
36	1	120/208V 100A 3 PH DISTRIBUTION PANEL
37	1	(ROXTEC) GENERATOR FEED STUB UP
38	1	ESI
39	1	FUEL POLISHER
40	1	UREA DOSING CABINET
41	1	AIR COMPRESSOR
42	1	CAMLOCK BOX
43	1	LIGHTED EXIT SIGN
44	2	ESC 100
45	1	LOCAL THERMOMETER
46	2	EXTERIOR OUTLETS
47	1	GENERATOR GROUNDING BAR
48	1	COMPONENT GROUNDING BAR
49	1	ENCLOSURE GROUNDING BUS
50	2	FUEL TANK GROUNDING PADS
51	1	SCR
52	2	EXHAUST SPOOLS
53	1	EXHAUST RAIN PAN
54	14	CUSTOMER SUPPLIED ISOLATORS
55	1	TOP CABLE TRAY ENTRANCE
56	1	EXTERNAL E-STOP
57	1	PIPE FLANGE (H.P.) 2 IN. NPT
58	1	PIPE FLANGE (H.P.) 3 IN. NPT
59	1	MECHANICAL DUCT FLANGE
60	1	HEAT TRACED UREA AND DEF LINES

TOMBALL CONTROLS

PROPRIETARY AND CONFIDENTIAL
THE INFORMATION CONTAINED IN THIS DRAWING IS THE SOLE PROPERTY OF TOMBALL CONTROLS. ANY USE OR REPRODUCTION IN PART OR AS A WHOLE WITHOUT THE WRITTEN PERMISSION OF TOMBALL CONTROLS IS PROHIBITED. THIS WORK IS INTENDED SOLELY FOR THE PROJECT NAMED.

UNLESS OTHERWISE SPECIFIED:
DIMENSIONS ARE IN INCHES
TOLERANCES:
FRACTIONAL ± 1/8"
ANGULAR ± 3°
DECIMAL ± 0.125"
INTERPRET PER ASME Y14.5-2009

MATERIAL

FINISH

DO NOT SCALE DRAWING

	NAME	DATE
DRAWN		
ENG APPR.		
MFG APPR.		
Q.A.		

COMMENTS:

TITLE: CHQ HYPERION

SIZE C | DWG. NO. BOM | REV F

SCALE: 1:1 | WEIGHT: | SHEET 3 OF 7

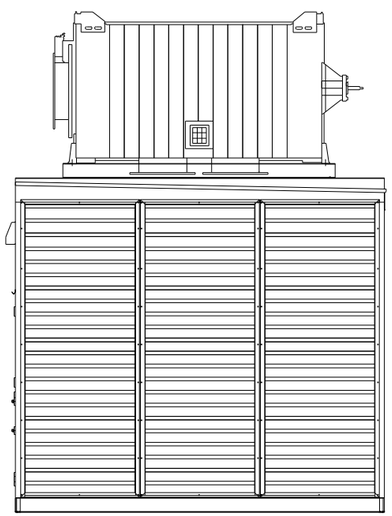

ENCLOSURE STACKED GENERATOR END VIEW

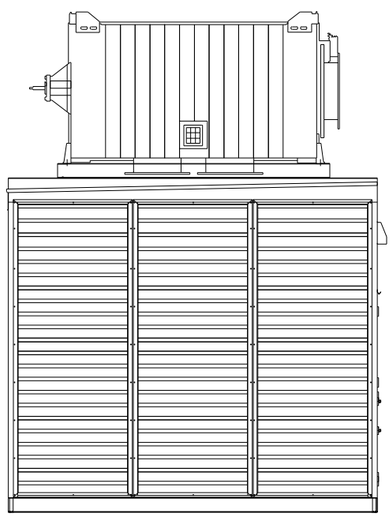

ENCLOSURE STACKED GENERATOR END VIEW

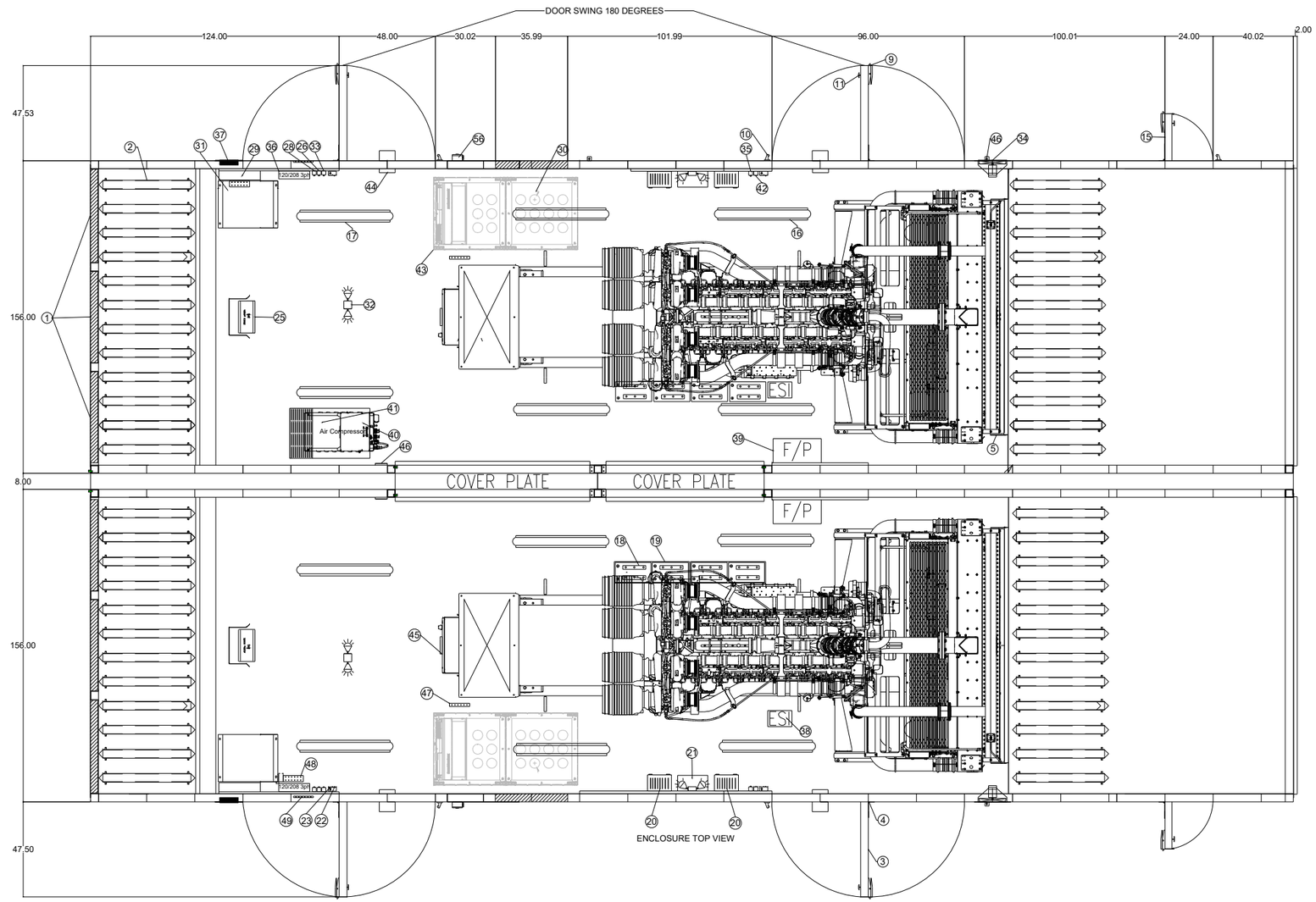

ENCLOSURE TOP VIEW

TOMBALL CONTROLS

PROPRIETARY AND CONFIDENTIAL
THE INFORMATION CONTAINED IN THIS DRAWING IS THE SOLE PROPERTY OF TOMBALL CONTROLS. ANY USE OR REPRODUCTION IN PART OR AS A WHOLE WITHOUT THE WRITTEN PERMISSION OF TOMBALL CONTROLS IS PROHIBITED. THIS WORK IS INTENDED SOLELY FOR THE PROJECT NAMED.

UNLESS OTHERWISE SPECIFIED:
DIMENSIONS ARE IN INCHES
TOLERANCES:
FRACTIONAL ± 1/8"
ANGULAR ± 3°
DECIMAL ± 0.125"
INTERPRET PER ASME Y14.5-2009

MATERIAL

FINISH

DO NOT SCALE DRAWING

	NAME	DATE
DRAWN		
ENG APPR.		
MFG APPR.		
Q.A.		

COMMENTS:

TITLE: CHQ HYPERION

SIZE	DWG. NO.	REV
C	Assembled View	F

SCALE: 1:1 | WEIGHT: | SHEET 3 OF 8

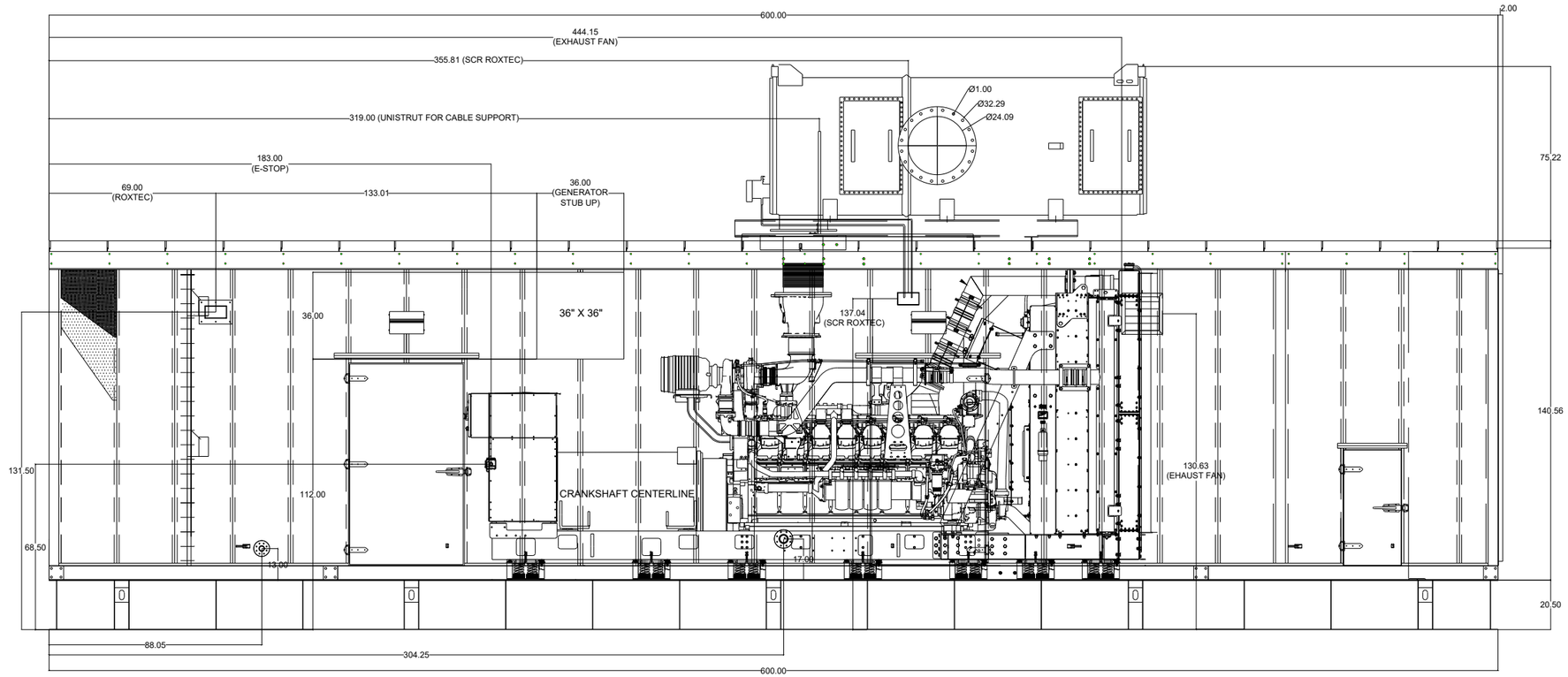

ENCLOSURE STACKED SIDE VIEW

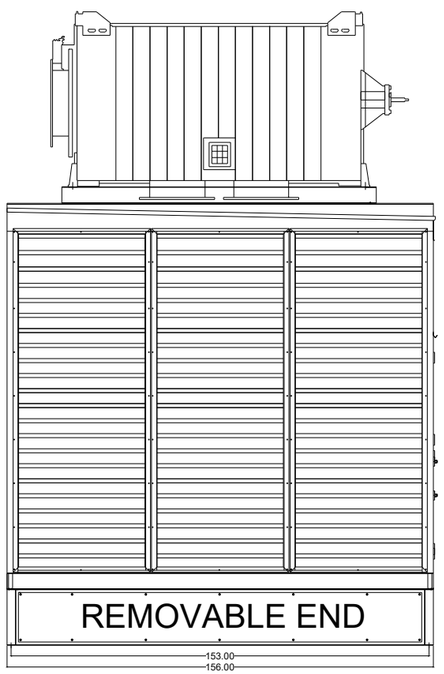

ENCLOSURE STACKED GENERATOR END VIEW

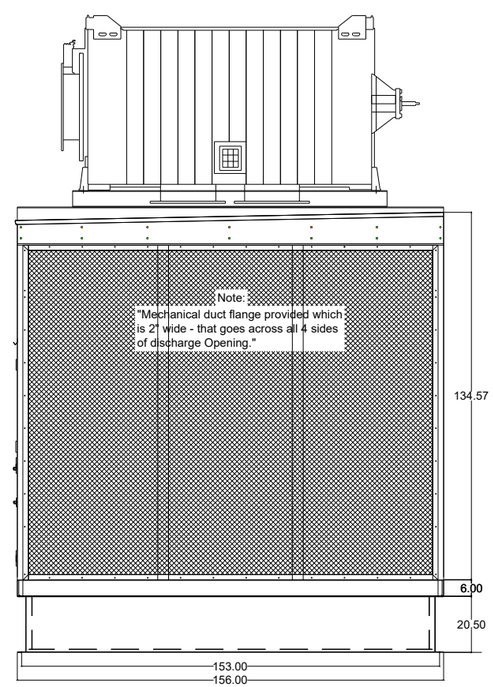

ENCLOSURE STACKED RADIATOR END VIEW

TOMBALL CONTROLS

PROPRIETARY AND CONFIDENTIAL
THE INFORMATION CONTAINED IN THIS DRAWING IS THE SOLE PROPERTY OF TOMBALL CONTROLS. ANY USE OR REPRODUCTION IN PART OR AS A WHOLE WITHOUT THE WRITTEN PERMISSION OF TOMBALL CONTROLS IS PROHIBITED. THIS WORK IS INTENDED SOLELY FOR THE PROJECT NAMED.

UNLESS OTHERWISE SPECIFIED:
DIMENSIONS ARE IN INCHES
TOLERANCES:
FRACTIONAL ± 1/8"
ANGULAR ± 3°
DECIMAL ± 0.125"
INTERPRET PER ASME Y14.5-2009

MATERIAL

FINISH

DO NOT SCALE DRAWING

	NAME	DATE
DRAWN		
ENG APPR.		
MFG APPR.		
Q.A.		

COMMENTS:

TITLE: CHQ HYPERION

SIZE	DWG. NO.	REV
C	Enclosure Stacked View	E

SCALE: 1:1 WEIGHT: SHEET 4 OF 8

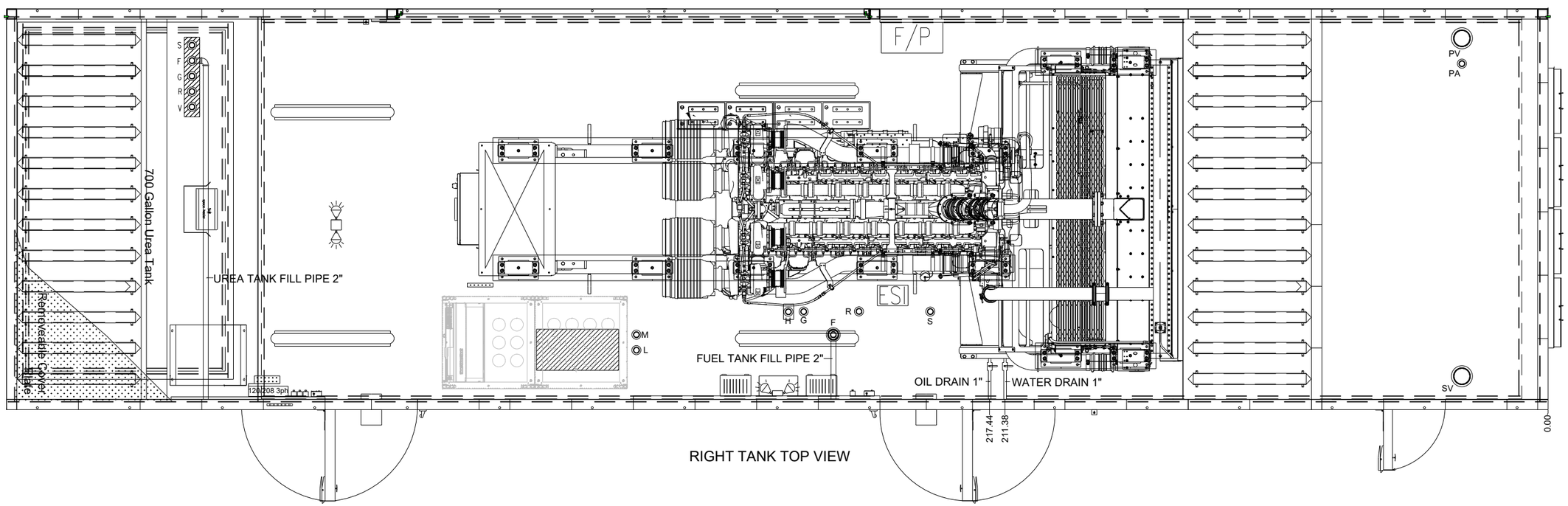

RIGHT TANK TOP VIEW

REVISIONS				
REV.	DESCRIPTION	DATE	BY	APP'D BY

TOMBALL CONTROLS

PROPRIETARY AND CONFIDENTIAL
THE INFORMATION CONTAINED IN THIS DRAWING IS THE SOLE PROPERTY OF TOMBALL CONTROLS. ANY USE OR REPRODUCTION IN PART OR AS A WHOLE WITHOUT THE WRITTEN PERMISSION OF TOMBALL CONTROLS IS PROHIBITED. THIS WORK IS INTENDED SOLELY FOR THE PROJECT NAMED.

UNLESS OTHERWISE SPECIFIED:
DIMENSIONS ARE IN INCHES
TOLERANCES:
FRACTIONAL ± 1/8"
ANGULAR ± 3°
DECIMAL ± 0.125"
INTERPRET PER ASME Y14.5-2009

MATERIAL

FINISH

DO NOT SCALE DRAWING

	NAME	DATE
DRAWN		
ENG APPR.		
MFG APPR.		
Q.A.		

COMMENTS:

TITLE: CHQ HYPERION

SIZE	DWG. NO.	REV
C	Drain Pipe View	F

SCALE: 1:1 | WEIGHT: | SHEET 1 OF 1

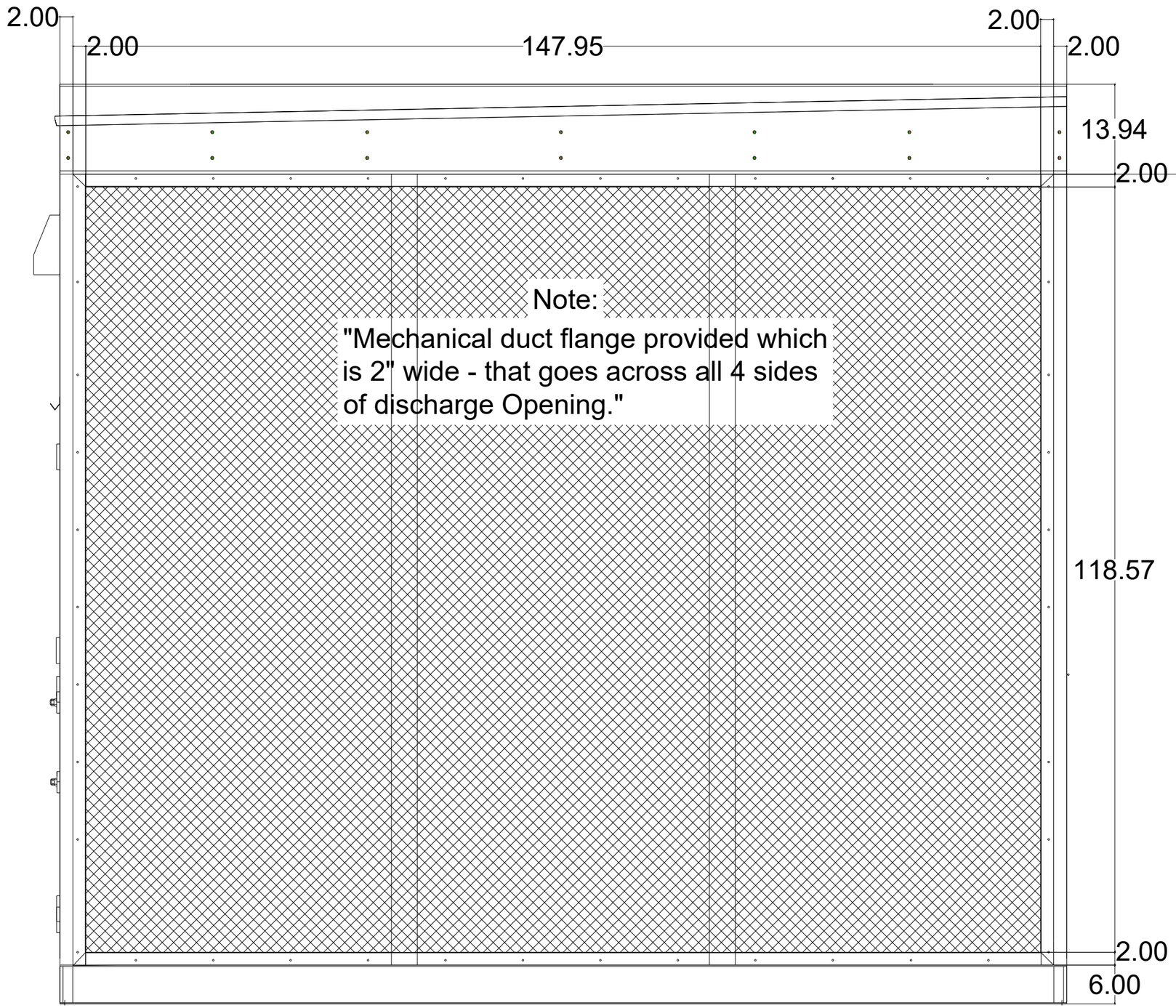

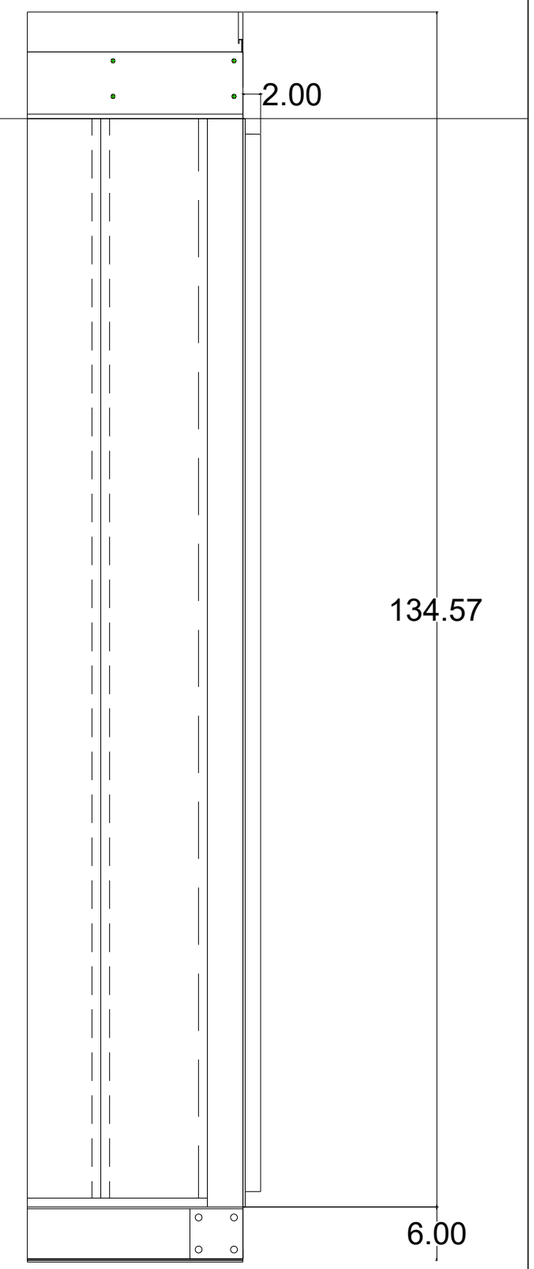

TOMBALL CONTROLS

PROPRIETARY AND CONFIDENTIAL
THE INFORMATION CONTAINED IN THIS DRAWING IS THE SOLE PROPERTY OF TOMBALL CONTROLS. ANY USE OR REPRODUCTION IN PART OR AS A WHOLE WITHOUT THE WRITTEN PERMISSION OF TOMBALL CONTROLS IS PROHIBITED. THIS WORK IS INTENDED SOLELY FOR THE PROJECT NAMED.

UNLESS OTHERWISE SPECIFIED:
DIMENSIONS ARE IN INCHES
TOLERANCES:
FRACTIONAL ± 1/8"
ANGULAR ± 3°
DECIMAL ± .0125"
INTERPRET PER ASME Y14.5-2009
MATERIAL
FINISH
DO NOT SCALE DRAWING

	NAME	DATE
DRAWN		
ENG APPR.		
MFG APPR.		
Q.A.		

COMMENTS:

TITLE: CHQ HYPERION

SIZE	DWG. NO.	REV
C	Mechanical Duct	F

SCALE: 1:1 | WEIGHT: | SHEET 1 OF 1

UL 142 Tank		
Usable Gallons: 5000 | Total Gallons: 5500		
ITEM	**SIZE**	**COMPONENT DESCRIPTION**
PA	2"	Primary Atmospheric Vent
PV	8"	Primary Emergency Vent
SV	8"	Secondary Emergency Vent
S	2"	Fuel Supply Port
R	2"	Fuel Return Port
F	4"	Fuel Fill Port
H	2"	Fuel High Alarm Switch W/Visual and Audible Alarms
G	2"	Fuel Gauge Port
L	2"	Fuel Low Level Alarm Switch
M	2"	Fuel Monitoring Switch (Rupture Basin)
FPS	2"	Fuel Polisher Supply
FPR	2"	Fuel Polisher Return

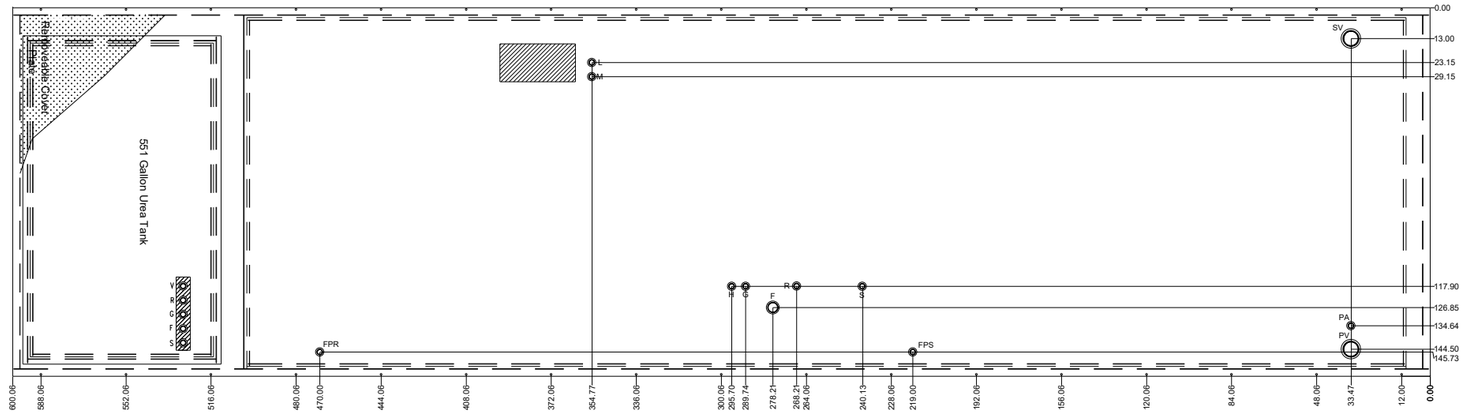

LEFT TANK TOP VIEW

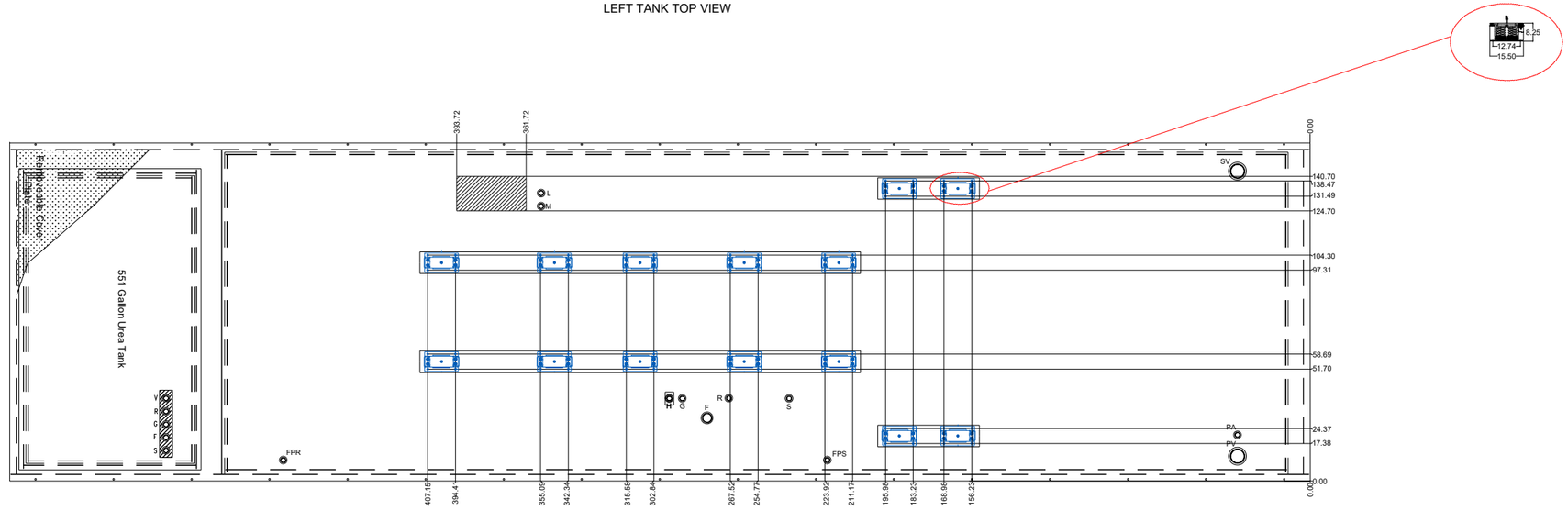

LEFT TANK TOP VIEW

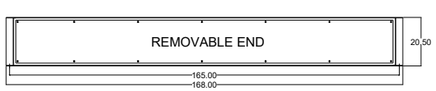

LEFT TANK END VIEW

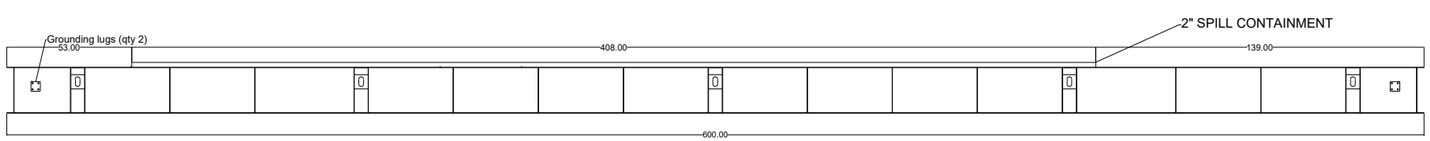

LEFT TANK SIDE VIEW

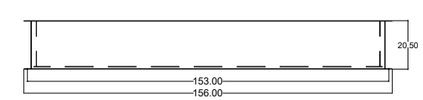

TOMBALL CONTROLS

PROPRIETARY AND CONFIDENTIAL
THE INFORMATION CONTAINED IN THIS DRAWING IS THE SOLE PROPERTY OF TOMBALL CONTROLS. ANY USE OR REPRODUCTION IN PART OR AS A WHOLE WITHOUT THE WRITTEN PERMISSION OF TOMBALL CONTROLS IS PROHIBITED. THIS WORK IS INTENDED SOLELY FOR THE PROJECT NAMED.

UNLESS OTHERWISE SPECIFIED:
DIMENSIONS ARE IN INCHES
TOLERANCES:
FRACTIONAL ± 1/8"
ANGULAR ± 2°
DECIMAL ± 0.125"
INTERPRET PER ASME Y14.5-2009
MATERIAL
FINISH
DO NOT SCALE DRAWING

	NAME	DATE
DRAWN		
ENG APPR.		
MFG APPR.		
Q.A.		

COMMENTS:

TITLE: CHQ HYPERION

SIZE C | DWG. NO. LEFT TANK VIEW | REV F

SCALE: 1:1 | WEIGHT: | SHEET 2 OF 7

UL 142 Tank		
Usable Gallons: 5000 | Total Gallons: 5500		
ITEM	**SIZE**	**COMPONENT DESCRIPTION**
PA	2"	Primary Atmospheric Vent
PV	8"	Primary Emergency Vent
SV	8"	Secondary Emergency Vent
S	2"	Fuel Supply Port
R	2"	Fuel Return Port
F	4"	Fuel Fill Port
H	2"	Fuel High Alarm Switch W/Visual and Audible Alarms
G	2"	Fuel Gauge Port
L	2"	Fuel Low Level Alarm Switch
M	2"	Fuel Monitoring Switch (Rupture Basin)
FPS	2"	Fuel Polisher Supply
FPR	2"	Fuel Polisher Return

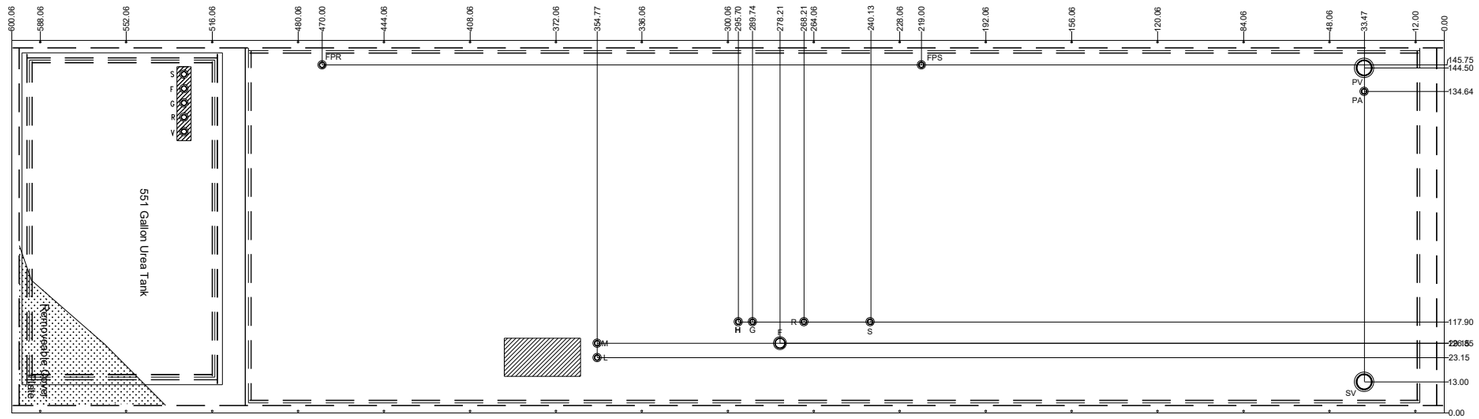

RIGHT TANK TOP VIEW

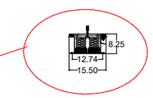

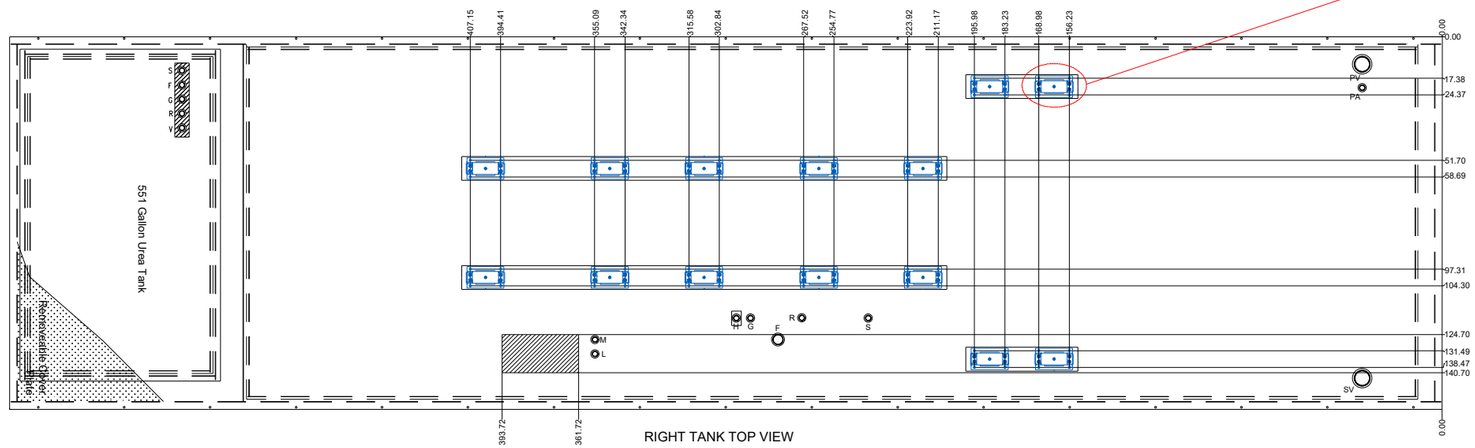

RIGHT TANK TOP VIEW

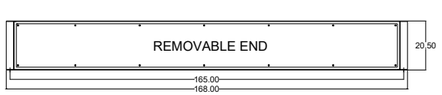

RIGHT TANK END VIEW

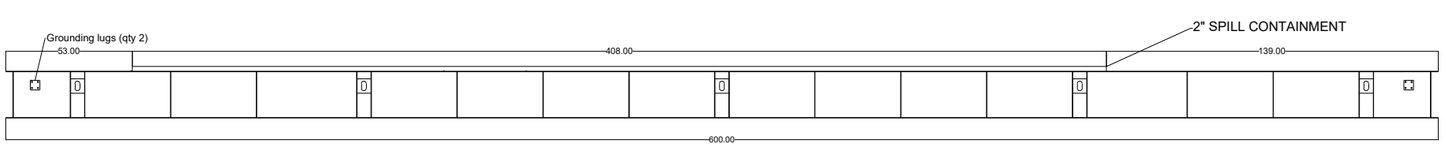

RIGHT TANK SIDE VIEW

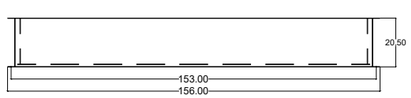

TOMBALL CONTROLS

PROPRIETARY AND CONFIDENTIAL
THE INFORMATION CONTAINED IN THIS DRAWING IS THE SOLE PROPERTY OF TOMBALL CONTROLS. ANY USE OR REPRODUCTION IN PART OR AS A WHOLE WITHOUT THE WRITTEN PERMISSION OF TOMBALL CONTROLS IS PROHIBITED. THIS WORK IS INTENDED SOLELY FOR THE PROJECT NAMED.

UNLESS OTHERWISE SPECIFIED:
DIMENSIONS ARE IN INCHES
TOLERANCES:
FRACTIONAL ± 1/8"
ANGULAR ± 3°
DECIMAL ± 0.125"
INTERPRET PER ASME Y14.5-2009

MATERIAL

FINISH

DO NOT SCALE DRAWING

	NAME	DATE
DRAWN		
ENG APPR.		
MFG APPR.		
Q.A.		

COMMENTS:

TITLE: CHQ HYPERION

SIZE C | DWG. NO. RIGHT TANK VIEW | REV F

SCALE: 1:1 | WEIGHT: | SHEET 1 OF 7

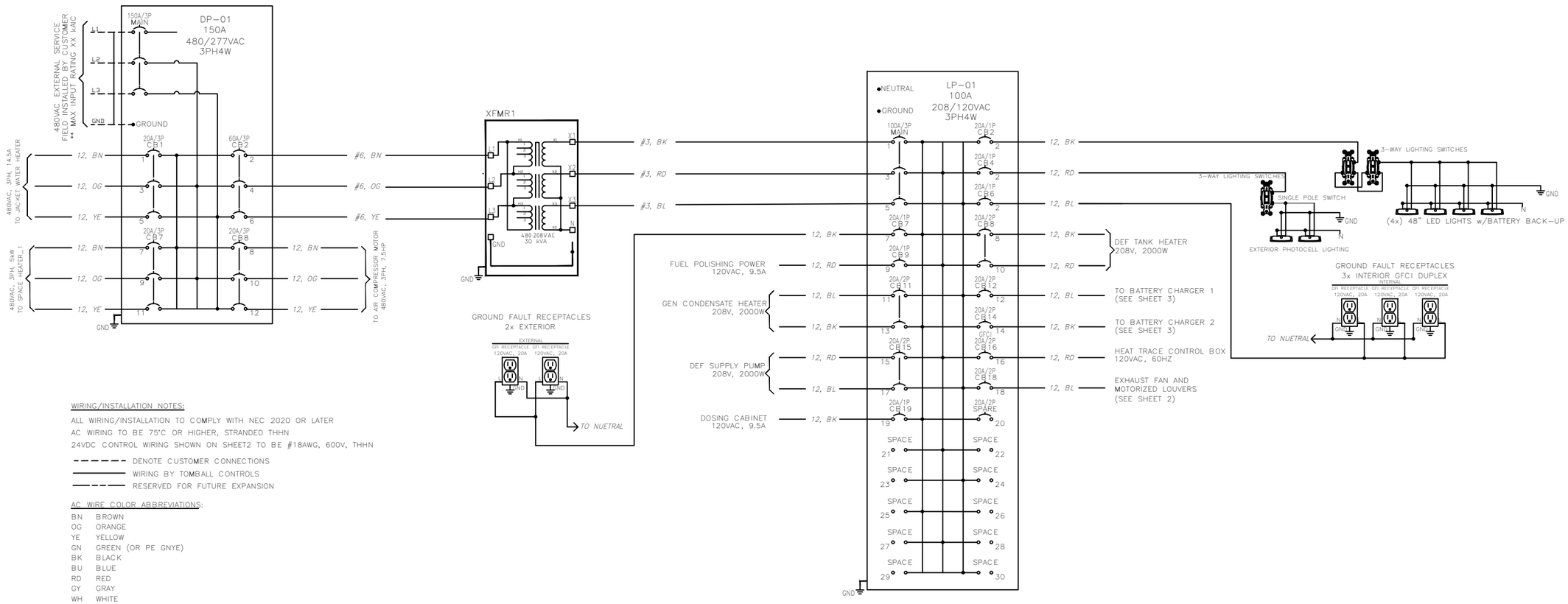

WIRING/INSTALLATION NOTES:

ALL WIRING/INSTALLATION TO COMPLY WITH NEC 2020 OR LATER
AC WIRING TO BE 75°C OR HIGHER, STRANDED THHN
24VDC CONTROL WIRING SHOWN ON SHEET2 TO BE #18AWG, 600V, THHN

- - - - - - DENOTE CUSTOMER CONNECTIONS
——— WIRING BY TOMBALL CONTROLS
— — — RESERVED FOR FUTURE EXPANSION

AC WIRE COLOR ABBREVIATIONS:

BN	BROWN
OG	ORANGE
YE	YELLOW
GN	GREEN (OR PE GNYE)
BK	BLACK
BU	BLUE
RD	RED
GY	GRAY
WH	WHITE

LOW VOLTAGE AC WIRE LABELING:

"L1-11G-12, GN"
"LOAD CENTER – CIRCUIT#,CONDUCTOR – SIZE (AWG), WIRE COLOR"

NOTES:

REFERENCE DRAWINGS:

NO.	REVISION	BY	DATE	APPR
C	UPDATED ONE-LINE AND SCHEDULES	SDP	9/10/25	
B	ADD SHEET 3 – BATTERY DETAIL	JCK	2/26/25	
A	INITIAL RELEASE FOR APPROVAL	JCK	12/13/24	

TOMBALL CONTROLS
10310 Fischer Road, Von Ormy, TX 78073

PROJECT LOCATION:	PROJ_LOC		
DRAWN BY:	JCK	DATE:	2/26/25
CHECKED:	JS	DATE:	2/26/25
APPROVED:	KR	DATE:	2/26/25
SCALE:	NONE		

NAME: ELECTRICAL SCHEMATIC
ORIGINAL PROJECT NO.: CLOUD 3MEG
DRAWING NO.: DWG NUM
SHEET: 1 OF 3
REV.: B

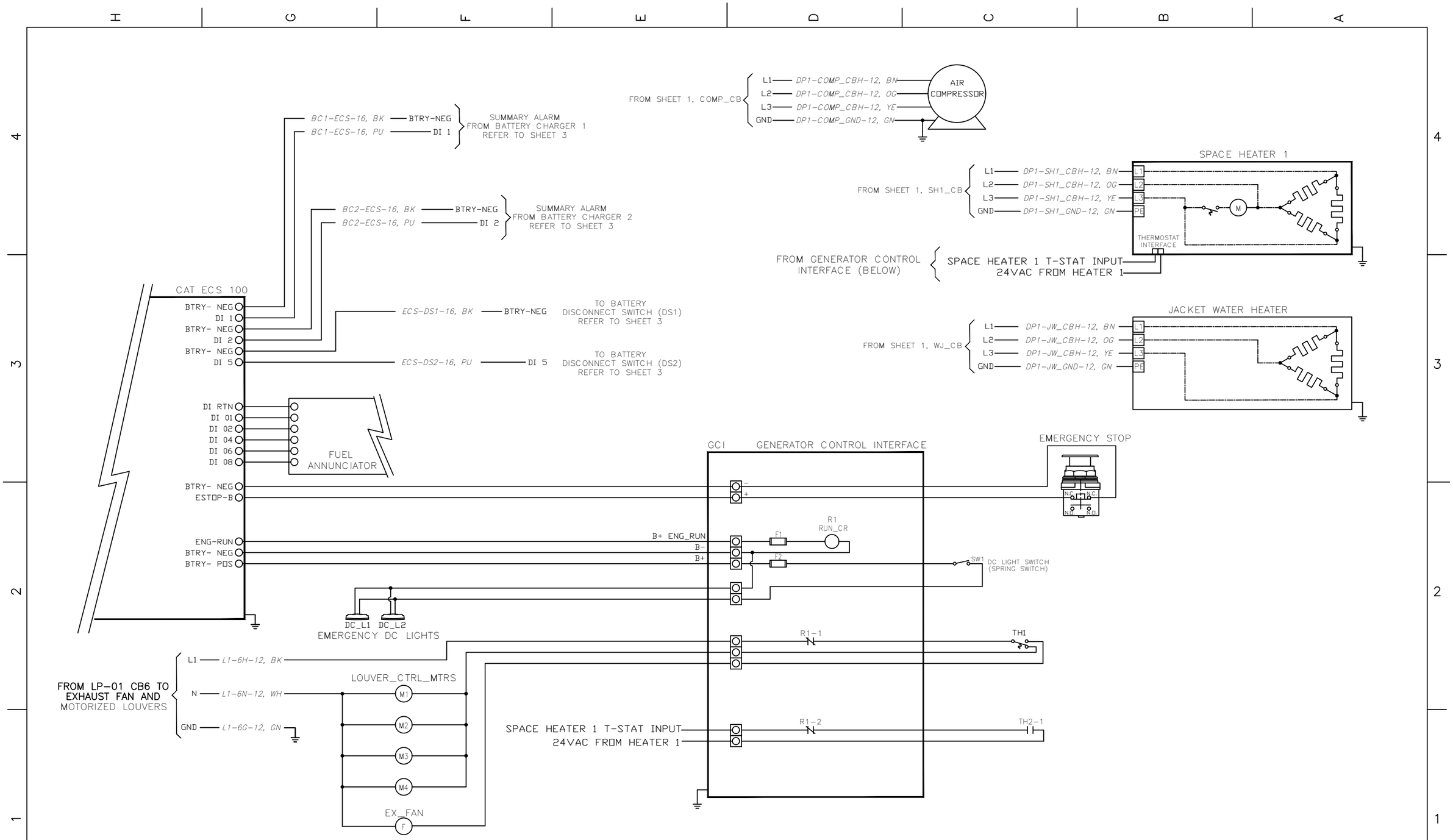

NOTES:

REFERENCE DRAWINGS:

NO.	REVISION	BY	DATE	APPR
C	UPDATED ONE LINE AND SCHEDULES	SDP	9/10/25	
B	ADD SHEET 3 – BATTERY DETAIL	JCK	2/26/25	
A	INITIAL RELEASE FOR APPROVAL	JCK	12/13/24	

TOMBALL CONTROLS
10310 Fischer Road, Von Ormy, TX 78073

PROJECT LOCATION:	PROJ_LOC		
DRAWN BY:	JCK	DATE:	2/26/25
CHECKED:	JS	DATE:	2/26/25
APPROVED:	KR	DATE:	2/26/25
SCALE:	NONE		

NAME: ELECTRICAL SCHEMATIC

ORIGINAL PROJECT NO.: CLOUD 3MEG

DRAWING NO.: DWG NUM | SHEET: 2 OF 3 | REV.: B

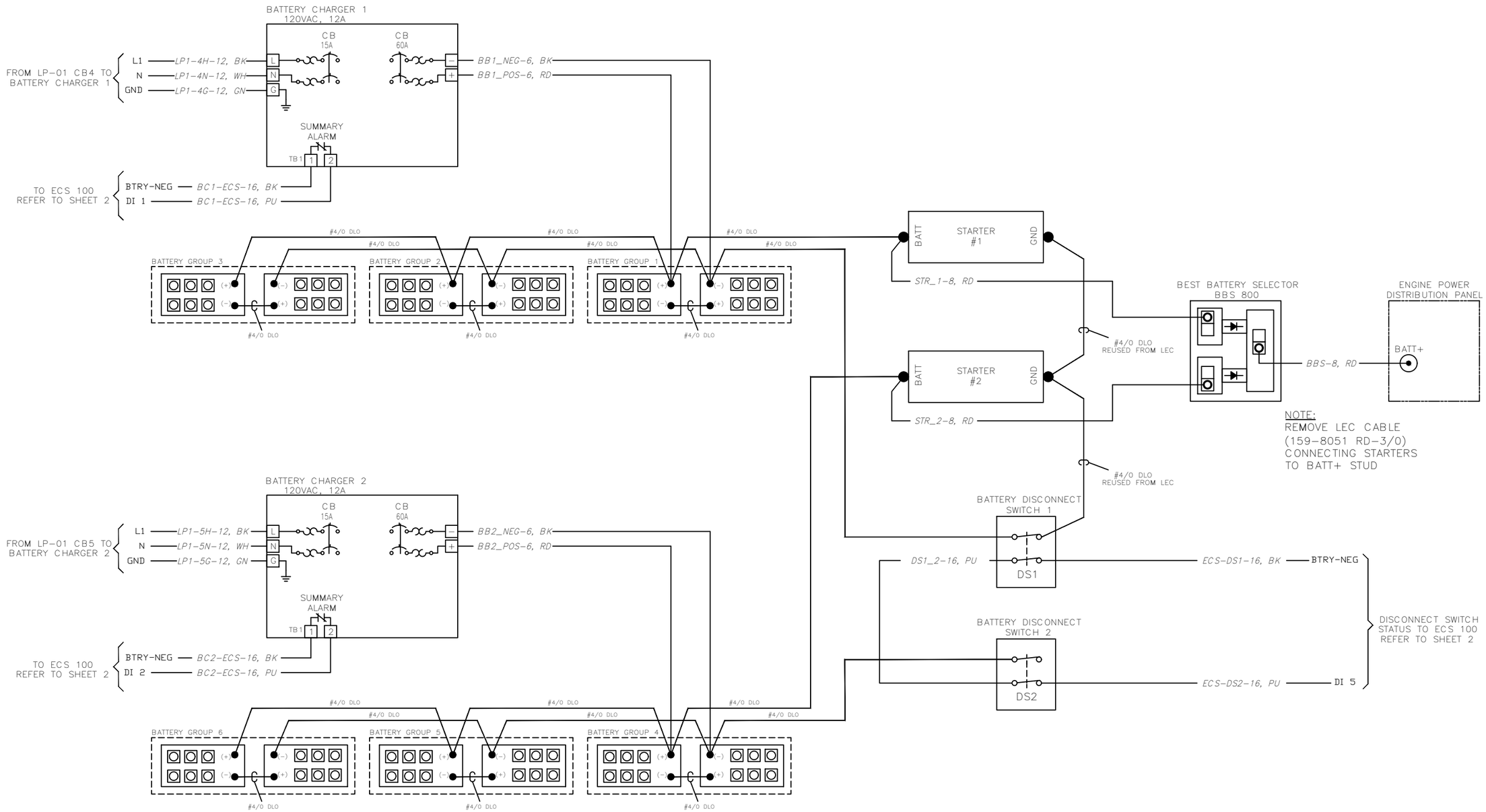

NOTES:

REFERENCE DRAWINGS:

NO.	REVISION	BY	DATE	APPR
C	UPDATED ONE LINE AND SCHEDULES	SDP	9/10/25	
B	ADD SHEET 3 – BATTERY DETAIL	JCK	2/26/25	
A	INITIAL RELEASE FOR APPROVAL	JCK	12/13/24	

TOMBALL CONTROLS
10310 Fischer Road, Von Ormy, TX 78073

PROJECT LOCATION:	PROJ_LOC		
DRAWN BY:	JCK	DATE:	2/26/25
CHECKED:	JS	DATE:	2/26/25
APPROVED:	KR	DATE:	2/26/25
SCALE:	NONE		

NAME: ELECTRICAL SCHEMATIC

ORIGINAL PROJECT NO.: CLOUD 3MEG

DRAWING NO.: DWG NUM

SHEET: 3 OF 3

REV.: B

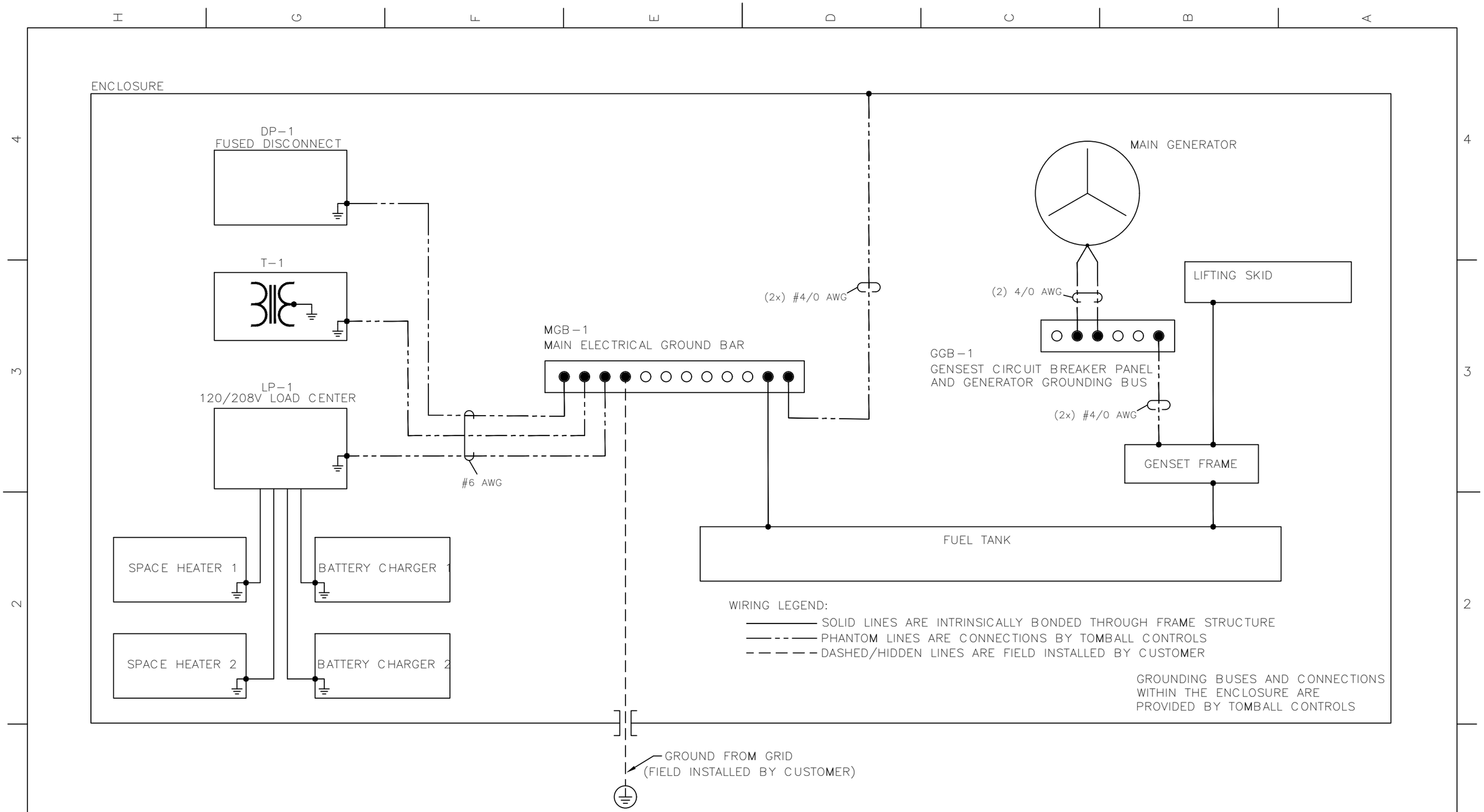

NOTES:

REFERENCE DRAWINGS:

NO.	REVISION	BY	DATE	APPR
C	UPDATED ONE LINE AND SCHEDULES	SDP	9/10/25	
0	INITIAL RELEASE FOR APPROVAL	JCK	2/14/25	

..\..\..\..\..\JOHNCK~1\AppData\Local\Temp\A$C96812e66.dwb

10310 Fischer Road, Von Ormy, TX 78073

PROJECT LOCATION:	PROJ_LOC		
DRAWN BY:	JCK	DATE:	2/14/25
CHECKED:	JS	DATE:	2/14/25
APPROVED:	KR	DATE:	2/14/25
SCALE:	NONE		

NAME: GROUNDING PLAN

ORIGINAL PROJECT NO.: CLOUD

DRAWING NO.: DWG NUM

SHEET: 1 OF 1

REV.: 0

DP-1 PANEL SCHEDULE

MAIN:150A MCB | VOLTAGE: 480/277VAC | 3PH,4W | SCCR: 25KAIC

CKT	DESCRIPTION	WIRE AWG	BRKR AMPS	LOAD AMPS	kVA REQUIRED L1		kVA REQUIRED L2		kVA REQUIRED L3		LOAD AMPS	BRKR AMPS	WIRE AWG	DESCRIPTION	CKT
1	JACKET WATER HEATER	12	20	14.5	4.0	15.0	–	–	–	–	54.2	60	6	TRANSFORMER	2
3	–	|	|	14.5	–	–	4.0	15.0	–	–	54.2	|	|	–	4
5	–	|	|	14.5	–	–	–	–	4.0	15.0	54.2	|	|	–	6
7	5KW SPACE HEATER 1	12	20	6.0	1.7	3.0	–	–	–	–	11.0	20	12	AIR COMPRESSOR, 7.5HP	8
9	–	|	|	6.0	–	–	1.7	3.0	–	–	11.0	|	|	–	10
11	–	|	|	6.0	–	–	–	–	1.7	3.0	11.0	|	|	–	12
13	SPACE (EMPTY LOCATION)				0.0	0.0	–	–	–	–				SPACE (EMPTY LOCATION)	14
15	SPACE (EMPTY LOCATION)				–	–	0.0	0.0	–	–				SPACE (EMPTY LOCATION)	16
17	SPACE (EMPTY LOCATION)				–	–	–	–	0.0	0.0				SPACE (EMPTY LOCATION)	18
19	SPACE (EMPTY LOCATION)				0.0	0.0	–	–	–	–				SPACE (EMPTY LOCATION)	20
21	SPACE (EMPTY LOCATION)				–	–	0.0	0.0	–	–				SPACE (EMPTY LOCATION)	22
23	SPACE (EMPTY LOCATION)				–	–	–	–	0.0	0.0				SPACE (EMPTY LOCATION)	24
25	SPACE (EMPTY LOCATION)				0.0	0.0	–	–	–	–				SPACE (EMPTY LOCATION)	26
27	SPACE (EMPTY LOCATION)				–	–	0.0	0.0	–	–				SPACE (EMPTY LOCATION)	28
29	SPACE (EMPTY LOCATION)				–	–	–	–	0.0	0.0				SPACE (EMPTY LOCATION)	30
	PER PHASE TOTAL kVA-->				23.7		23.7		23.74444						
	TOTAL kVA-->				71.2										
	TOTAL AMPS-->				85.7										

LP-01 PANEL SCHEDULE

MAIN:100A MCB | VOLTAGE: 120/208VAC | 3PH,4W | SCCR: 25KAIC

CKT	DESCRIPTION	WIRE AWG	BRKR AMPS	LOAD AMPS	kVA REQUIRED L1		kVA REQUIRED L2		kVA REQUIRED L3		LOAD AMPS	BRKR AMPS	WIRE AWG	DESCRIPTION	CKT
1	INTERIOR LIGHTS	12	20	2.5	0.3	0.0	–	–	–	–		100		BRANCH MOUNTED MCB	2
3	EXTERIOR LIGHTS	12	20	2.9	–	–	0.3	0.0	–	–		|		–	4
5	INTERIOR GFCI	20	20	4.5	–	–	–	–	0.5	0.0		|		–	6
7	EXTERIOR GFCI	20	20	3.0	0.4	1.2	–	–	–	–	9.6	20	12	DEF TANK HEATER	8
9	FUEL POLISHER	12	20	9.5	–	–	1.1	1.2	–	–	9.6	|	|	–	10
11	GEN CONDENSATE HTR	12	20	5.8	–	–	–	–	0.7	1.4	12.0	20	12	BATTERY CHARGER 1	12
13	–	|	|	5.8	0.7	1.4	–	–	–	–	12.0	20	12	BATTERY CHARGER 2	14
15	DEF SUPPLY PUMP	12	20	20.0	–	–	2.4	0.3	–	–	2.1	20	12	HEAT TRACE	16
17	–	|	|	20.0	–	–	–	–	2.4	0.3	2.3	20	12	EXHAUST FAN/LOUVERS	18
19	DOSING CABINET	12	20	20.0	2.4	0.0	–	–	–	–		20		SPARE	20
21	SPACE (EMPTY LOCATION)				–	–	0.0	0.0	–	–				SPACE (EMPTY LOCATION)	22
23	SPACE (EMPTY LOCATION)				–	–	–	–	0.0	0.0				SPACE (EMPTY LOCATION)	24
25	SPACE (EMPTY LOCATION)				0.0	0.0	–	–	–	–				SPACE (EMPTY LOCATION)	26
27	SPACE (EMPTY LOCATION)				–	–	0.0	0.0	–	–				SPACE (EMPTY LOCATION)	28
29	SPACE (EMPTY LOCATION)				–	–	–	–	0.0	0.0				SPACE (EMPTY LOCATION)	30
	PER PHASE TOTAL kVA-->				6.3		5.3		5.4						
	TOTAL kVA-->				17.0										
	TOTAL AMPS-->				20.4										

CUSTOMERS USE ONLY

APPROVED FOR PRODUCTION:
APPROVED WITH CHANGES:
APPROVED BY:
APPROVAL DATE:
NOT APPROVED:

REVISIONS

REV.	DESCRIPTION	DATE	BY	APPD BY
C	UPDATED ONE LINE SCHEDULES	9/10	SDP	

TOMBALL CONTROLS

PROPRIETARY AND CONFIDENTIAL
THE INFORMATION CONTAINED IN THIS DRAWING IS THE SOLE PROPERTY OF TOMBALL CONTROLS. ANY USE OR REPRODUCTION IN PART OR AS A WHOLE WITHOUT THE WRITTEN PERMISSION OF TOMBALL CONTROLS IS PROHIBITED. THIS WORK IS INTENDED SOLELY FOR THE PROJECT NAMED.

UNLESS OTHERWISE SPECIFIED
DIMENSIONS ARE IN INCHES
TOLERANCES:
FRACTIONAL ± 1/8"
ANGULAR ± 3°
DECIMAL ± 0.125"
INTERPRET PER ASME Y14.5-2009
MATERIAL
FINISH
DO NOT SCALE DRAWING

	NAME	DATE
DRAWN	JCK	12/10/24
ENG APPR.	CH	
MFG APPR.	KR	
Q.A.		

COMMENTS:

TITLE: CLOUD 3MEG

SIZE D | DWG. NO. kVA SCHEDULE | REV –

SCALE: N/A | WEIGHT: | SHEET 1 OF 1

4545 FM 775 Seguin, TX 78155
10310 Fischer Rd, Von Ormy, TX 78073
830-900-3190
contact@tomballcontrols.com
www.tomballcontrols.com

3

Components

PacLights

Commercial & Industrial Lighting

The FVTB™ Series

LED Vapor Tight Strip

LED Vapor Tight Strip

PROJECT:

DATE:

TYPE:

PREPARED BY:

5 YEAR WARRANTY

KEY FEATURES
100,000-Hour LED lifespan
Field-adjustable Color & Power on all models
Ingress Protection rating of **IP66** for dust and water
Available in **4ft** and **8ft** length
Emergency Battery Backup option available

UL CERTIFIED · DLC LISTED · OUTPUT & CCT FIELD ADJUSTABLE · MOTION CONTROL OPTION · EMERGENCY BACKUP OPTION · NLC NETWORKED CONTROL OPTION

TECHNICAL SPECIFICATIONS

COMPLIANCE

UL Listed
UL 1598 Suitable for wet locations

IESNA LM79 & LM-80 Testing
Paclights LED luminaires have been tested by an independent laboratory in accordance with IESNA LM-79 and LM-80.

DLC Qualification
Selected models of this product are on the Design Lights Consortium (DLC) Qualified Products List and are eligible for rebates from DLC Member Utilities. To view our DLC qualified products, please consult the DLC Qualified Products List at www.designlights.org/qpl

LED CHARACTERISTICS

LEDS
Long-life, high-efficacy, surface-mount LEDs

Lifespan
100,000-hour LED lifespan based on IES LM-80 results and TM-21 calculations

Color Rendering Index
>80

Color Uniformity
PacLights' range of Correlated Color Temperature follows the guidelines of the American National Standard for Specications for the Chromaticity of Solid State Lighting (SSL) Products, ANSI C78.377-2017

ELECTRICAL

Drivers
0-10V continuous dimming, can be dim to 10%
Input Voltage: 120-277V, 50-60 Hz
Power Factor : > 0.9
Wattage: FVTB-4D: 45w (adjustable to 38w or 34w by using a dip switch).
FVTB-8D: 90w (adjustable to 75w or 65w by using a dip switch).
Input Current: FVTB-4D: 0.42A (120v); 0.24A (208v); 0.21A (240v); 0.18A (277v).
FVTB-8D: 0.84A (120v); 0.48A (208v); 0.42A (240v); 0.37A (277v).

CONSTRUCTION

IP Rating
Ingress Protection rating of IP66 for dust and water

Ambient Temperature
Suitable for 50° C (122° F) ambient temperature

Cold Weather Starting
The minimum starting temperature is -4 F°/-20° C

Housing
Non-Corrosive (PC) Polycarbonate housing.
NEMA 4X; IK10 Rated
Stainless Steel spec grade hasps and clips.

Mounting Methods
- Surface mount (standard)
- Suspended mount, v-hooks (standard)

Green Technology
Mercury and UV free, and RoHS compliant.

Lens
Frosted

OTHER

5-Year Limited Warranty**
The PacLights 5-year, limited warranty covers light output, driver performance and paint finish.

**PacLights's warranty is subject to all terms and conditions found at paclights.com/warranty

Copyright© 2025 PacLights All Rights Reserved Specifications are subject to change at any time without notice

ORDERING INFORMATION

FVTB™

FAMILY	MODEL	WATTAGE	CCT	CONTROL	EMERGENCY BACKUP
FVTB	4D	38W	4000K		EM500

EXAMPLE
FVTB-4D-45/38/34-835/840/850
FVTB-4D-38-840-WBN
FVTB-8D-90/75/65-850-MM-EM2500

MODEL

* MUST SELECT ONE

CODE	LENGTH	WATTAGE SELECTABLE	CCT SELECTABLE
4D	4'	45/38/34W	3500/4000/5000K
8D	8'	90/75/65W	3500/4000/5000K

WATTAGE

* MUST SELECT ONE

CODE	WATTAGE	COMPATIBLE
45/38/34	45/38/34W Selectable	FVTB-4D Models
45	45W	
38	38W	
34	34W	
90/75/65	90/75/65W Selectable	FVTB-8D Models
90	90W	
75	75W	
65	65W	

CCT

* MUST SELECT ONE

CODE	CCT	CRI
835/840/850	3500/4000/5000K Selectable	>80
835	3500K	
840	4000K	
850	5000K	

CONTROL

* LEAVE BLANK, or SELECT ONE

CODE	TYPE	PARTS SKU	SENSOR	MOUNT	INSTALL
MM	Standalone	SE-BC-ANT7	Bi-level Microwave Motion & Daylight Harvesting	Internal	FACTORY
WBN	Bluetooth Networked	KEILTON-FA102	N/A	Internal	FACTORY
WBM		KEILTON-FA102 KEILTON-MWS105	Microwave Motion & Daylight	Internal	FACTORY

* all control options require auxiliary power supply - Part# TM-PSC-AC-PP-400

EMERGENCY BATTERY BACKUP

* LEAVE BLANK, or SELECT ONE

CODE	PARTS SKU	WATT	EMERGENCY LUMEN	CA CEC TITLE 20 MODEL#	COMPATIBLE	EMERGENCY RUNTIME	INSTALL
EM500	EMB-4	4w	500 Lumen	BLD-FM04E-600400	FVTB-4D Models	> 90 mins	FACTORY
EM1000	EMB-8	8w	1,000 Lumen	BLD-CM20N-480800-8W			
EM1800	EMB-15	15w	1,800 Lumen	BLD-CM20N-480800-15W	FVTB-8D Models		
EM2500	EMB-20	20w	2,500 Lumen	BLD-CM20N-YYY			

Copyright© 2025 PacLights All Rights Reserved Specifications are subject to change at any time without notice

PERFORMANCE

	Model	Lumen Package	Wattage Setting	CCT Setting	Lumen Output
Delivered Lumens, 80 CRI	FVTB-4D	4,600	34w	3500K	4,624
				4000K	4,658
				5000K	4,692
		5,000	38w	3500K	5,054
				4000K	5,092
				5000K	5,130
		5,800	45w	3500K	5,850
				4000K	5,895
				5000K	5,940

	Model	Lumen Package	Wattage Setting	CCT Setting	Lumen Output
Delivered Lumens, 80 CRI	FVTB-8D	8,900	65w	3500K	8,840
				4000K	8,905
				5000K	8,970
		10,000	75w	3500K	9,975
				4000K	10,050
				5000K	10,125
		11,700	90w	3500K	11,700
				4000K	11,790
				5000K	11,880

DLC CHART

Selected models of this product are on the Design Lights Consortium (DLC) Qualified Products List and are eligible for rebates from DLC Member Utilities. To view our DLC qualified products, please consult the DLC Qualified Products List at www.designlights.org/qpl

DLC Primary use designation: Direct Linear Ambient Luminaires

MODEL#	CLASS	DLC PRODUCT ID
FVTB-4D-45/38/34-835/840/850 (A3L+B3)	Standard	PI6DDDW8
FVTB-8D-90/75/65-835/840/850 (A3L+B3)	Standard	PL34KKUR

STANDARD FEATURES

Field Selectable Power & Color

OUTPUT & CCT FIELD ADJUSTABLE

Select the desired output power or light color temperature by sliding the respective Output Power or CCT Selection Switch left or right to the desired value. CCT can be adjusted to 3500/4000/5000K, and Output Power can be adjusted to:

- 45w / 38w / 34w on 4ft models
- 90w / 75w / 65w on 8ft models

EMERGENCY BACKUP Options

Emergency Battery Backup (option: -EM500 / -EM1000 / -EM1800 / -EM2500)

EMERGENCY BACKUP OPTION

FVTB series emergency backup models save time and cost in the installation. When there is a power outage, the emergency backup driver and battery will power the FVTB to a brightness of up to 2,500 lumen for at least 90 mins.

Options:

- **-EM500** 500 lumen for at least 90 mins
- **-EM1000** 1,000 lumen for at least 90 mins
- **-EM1800** 1,800 lumen for at least 90 mins
- **-EM2500** 2,500 lumen for at least 90 mins

Copyright© 2025 PacLights All Rights Reserved Specifications are subject to change at any time without notice

CONTROL Options

Microwave Bi-level Motion & Daylight Harvesting Control (option: -MM)

MOTION CONTROL OPTION

DAYLIGHT HARVESTING OPTION

Microwave occupancy sensors can detect motion even through plastic, glass, and thin non-metal materials. They can be mounted as high as 20 feet and feature a signature three-step dimming function, ideal for areas that need a gradual change in lighting before completely turning off. An optional daylight harvesting function reduces electric lighting in building interiors when natural daylight is available. Control parameters can be adjusted with the dip switches on the sensor, or an optional wireless commissioning device.

SE-BC-ANT7
(factory installed)

SE-BC-RC-100

Optional wireless commissioning device can be purchase separately to access extra sensor settings than the dip switches on the sensor.

Control Option: -MM Sensor Specification

Sensitivity	20%/50%/75%/100%*
Hold Time (before dim)	10s*/1min/5min/15min
Daylight Threshold	10/30*/50 Lux, or Disable
Daylight Harvesting#	Set to desired light level, Enable/Disable*
Stand-by Time(before turn off)	1min/30min/60min*, or Never
Stand-by Dimming Level	10%/30%*/50%
Detection Height	up to 20ft
Detection Radius	up to 25ft

*default setting
#SE-BC-RC-100 commissioning remote device is required to enable daylight harvesting function

Networked Lighting Control (option: -WBN / -WBM)

NLC
NETWORKED CONTROL OPTION

Network Lighting Controls (NLC) offer Luminaire Level Lighting Control (LLLC) based on Bluetooth-enabled Mesh Networking of Luminaires. Individual addressability enables luminaires to be communicated with each other within the zone/network. Luminaires can be grouped, trim and controlled by using the smart device app or connected wall switches. Scheduling, scene and sensors can be added for automation among the lights within the zone/group.

- **(-WBN)** Wireless bluetooth networked control (node only)
  SKU: KEILTON-FA102
- **(-WBM)** Wireless bluetooth networked control with microwave occupancy and daylight sensor
  SKU: KEILTON-FA102 & KEILTON-MWS105

KEILTON-FA102
(factory installed)

KEILTON-MWS105
(factory installed)

iOS/Andriod APP will be used to commissioning or customize settings networked controls.

Learn more, visit www.PacLights.com/NLC/

Copyright© 2025 PacLights All Rights Reserved Specifications are subject to change at any time without notice

DIMENSIONS

FVTB - 4D (4 Ft)

Weight 4.5 lbs

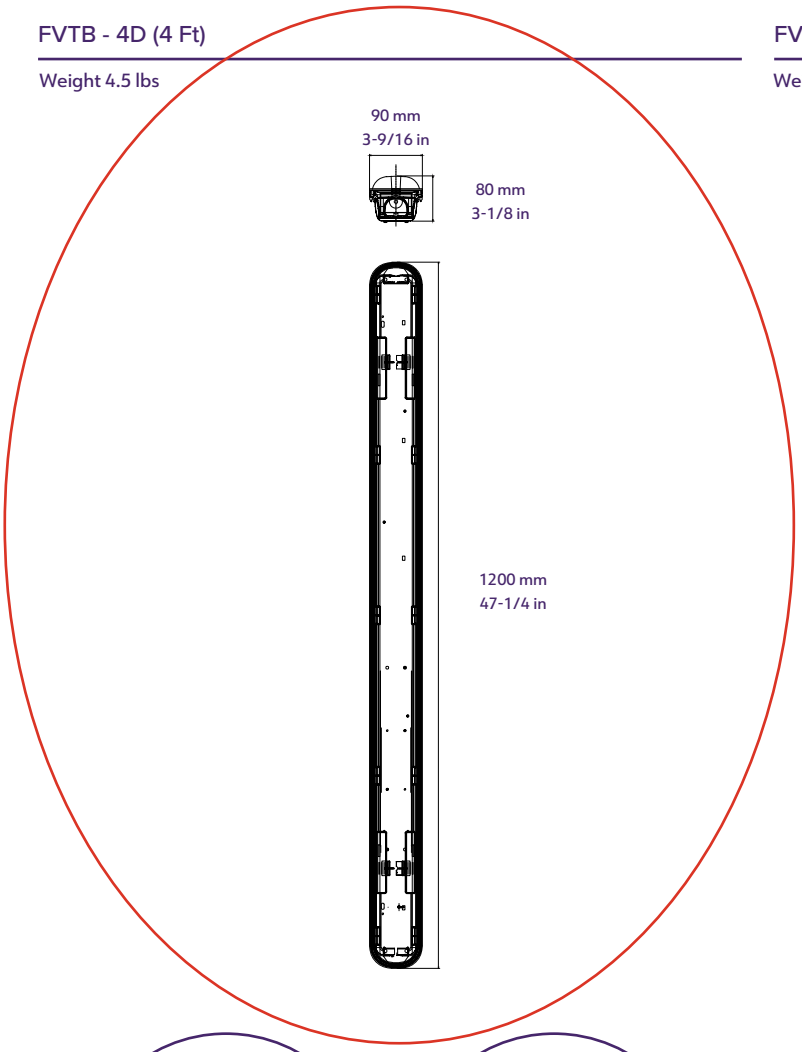

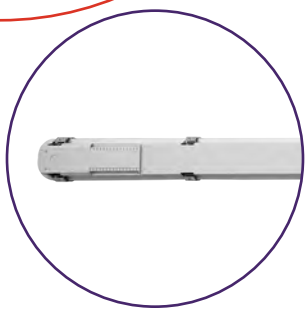

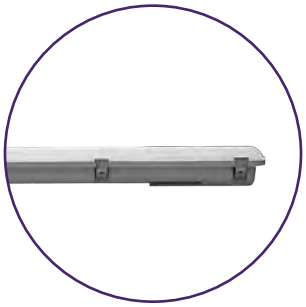

FVTB - 8D (8 Ft)

Weight 7.8 lbs

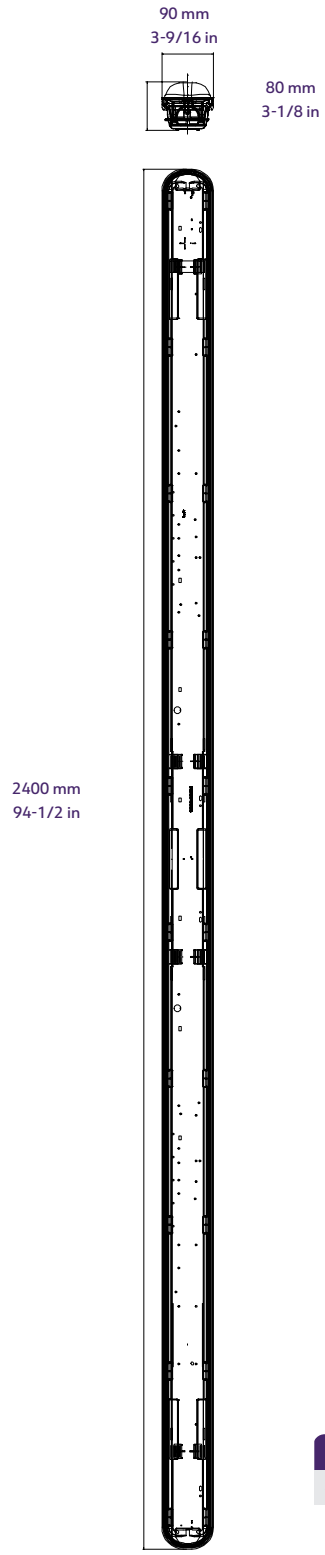

FINISHES	
all models	Gray

Copyright© 2025 PacLights All Rights Reserved Specifications are subject to change at any time without notice

FWPC™

PacLights

CCT selectable full-cut off

LED Wall Mount

PROJECT:

DATE:

TYPE:

PREPARED BY:

5 YEAR WARRANTY

KEY FEATURES
100,000-Hour LED lifespan
1-10V dimming standard on all models
Selected models **3000K/4000K/5000K field-selectable**
Optional **photocell and motion control**
Emergency backup option provided

c UL us LISTED | DLC PREMIUM | 1-10V DIMMING | CCT FIELD ADJUSTABLE* | EMERGENCY BACKUP OPTION

*available on selected models

TECHNICAL SPECIFICATIONS

COMPLIANCE

UL Listed
Suitable for wet locations

IESNA LM79 & LM-80 Testing
Paclights LED luminaires have been tested by an independent laboratory in accordance with IESNA LM-79 and LM-80.

DLC Qualification
Selected models of this product are on the Design Lights Consortium (DLC) Qualified Products List and are eligible for rebates from DLC Member Utilities. To view our DLC qualified products, please consult the DLC Qualified Products List at www.designlights.org/qpl

LED CHARACTERISTICS

LEDS
Long-life, high-efficacy, surface-mount LEDs

Lifespan
100,000-hour LED lifespan based on IES LM-80 results and TM-21 calculations

Color Rendering Index
>80

Beam Angel & BUG
100° beam; B2-U0-G1

Field-selectable Color Temperature
On selected models (3CCT), 3000K/4000K/5000K, selectable by a dip switch

Color Uniformity
PacLights' range of Correlated Color Temperature follows the guidelines of the American National Standard for Specications for the Chromaticity of Solid State Lighting (SSL) Products, ANSI C78.377-2017

ELECTRICAL

Drivers
1-10V Dimmable
Input Voltage: 120-277V, 50-60 Hz
Power Factor > 0.9; THD <20%
Surge Protection 6kA

CONSTRUCTION

IP Rating
IP 65 Rated

Ambient Temperature
Suitable for up to 50° C (122° F) ambient temperature

Cold Weather Starting
The minimum starting temperature is -40 F°/-40° C

Housing
Die-cast aluminum housing

Gaskets
Silicon Gaskets

Finish
Our environmentally friendly polyester powder coatings are formulated for high-durability and long-lasting color, and contain no VOC or toxic heavy metals.

Mounting Methods
Surface mount

Green Technology
Mercury and UV free, and RoHS compliant. Polyester powder coat finish formulated without the use of VOC or toxic heavy metals.

Lens
Polycarbonate

OTHER

5-Year Limited Warranty**
The PacLights 5-year, limited warranty covers light output, driver performance and paint finish.
**PacLights's warranty is subject to all terms and conditions found at paclights.com/warranty

Copyright© 2021 PacLights All Rights Reserved Specifications are subject to change at any time without notice

TECHNICAL SPECIFICATIONS Continued

FWPC-040/060/080

Weight 7.5 lbs

FWPC-100/120/150

Weight 11.3 lbs

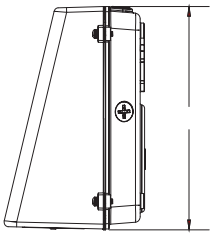

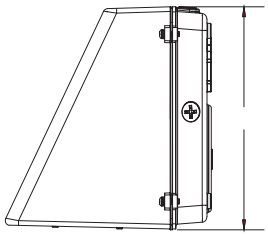

FINISHES	
all models	Dark Bronze

LIGHT MODULES	
FWPC-040/060/080	1
FWPC-100/120/150	2

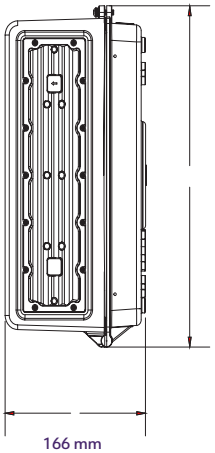

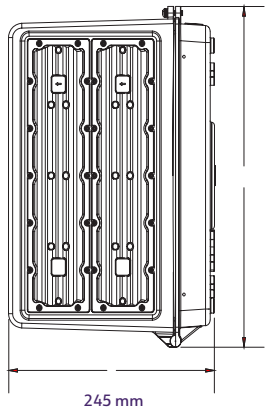

CCT SELECTABLE on selected models

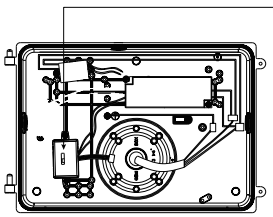

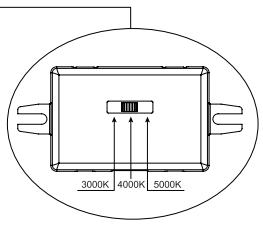

CCT SELECTABLE ON FIXTURE

Selected models (3CCT) are equipped with color temperature settings ranging from: 3000K (Warm White), 4000K (Neutral White) and 5000K (Daylight). Simply use the switch directly on the fixutre to select the desired color temperature and then install. Selectable color temperature technology removes the guesswork of choosing the correct color temperature for your space. Select 3000K in applications requiring warm and inviting light, select 4000K for a slightly cooler light appearance, select 5000K in areas requiring bright, crisp light.

Copyright© 2021 PacLights All Rights Reserved Specifications are subject to change at any time without notice

ACCESSORIES Optional

EMERGENCY BATTERY BACKUP

Emergency Battery Backup generates a bright illumination even in emergency environments, such as power outages, blackouts, and fires, thanks to its UL924 approved battery for backup lighting. In addition, with intelligent emergency detection function automatically, it can provide 90 minutes ~ 180 minutes continuously work time under power-off mode.

SECONDARY SURGE PROTECTOR

Secondary surge protector can act as the second line of defense, in addtional to the LED driver's intergrated lightning arrester.

CONTROLS

Photocell Control allows ON/OFF switching the luminaries, to be determined by the amount of daylight present. Specified low light levels at dusk will turn lights ON. When sufficient daylight returns at dawn, the lights automatically turn OFF. Automatic lighting controls save energy.

Bi-level Motion Control uses passive infrared sensing strategies option (up to 18ft) to provide the ability of sensing occupancy or vacancy on luminaries, to bi-level dimming and automatically turn ON and OFF the lighting fixture. Or, select microwave sensing strategies option to provide extended range of sensing (up to 60ft).

PERFORMANCE

FWPC™ 040

40W	3000K Warm white	4000K Neutral	5000K Daylight
LUMENS	4,880	5,680	5,040
LM/W	122	142	126

FWPC™ 060

60W	3000K Warm white	4000K Neutral	5000K Daylight
LUMENS	7,320	8,640	7,620
LM/W	122	144	127

FWPC™ 080

80W	3000K Warm white	4000K Neutral	5000K Daylight
LUMENS	9,680	11,360	10,080
LM/W	121	142	126

FWPC™ 100

100W	3000K Warm white	4000K Neutral	5000K Daylight
LUMENS	12,600	14,600	13,000
LM/W	126	146	130

FWPC™ 120

120W	3000K Warm white	4000K Neutral	5000K Daylight
LUMENS	14,520	16,800	15,240
LM/W	121	140	127

FWPC™ 150

150W	3000K Warm white	4000K Neutral	5000K Daylight
LUMENS	18,000	21,300	18,900
LM/W	120	142	126

ORDERING INFORMATION

FWPC™

Family	Model	Color Temp	Options
FWPC	40W	40	PC

Model

040	40w
060	60w
080	80w
100	100w
120	120w
150	150w

Color Temp

30	3000K (warm white)
40	4000K (neutral)
50	5000K (daylight)
3CCT	3000/4000/5000K Selectable

Options

SP	secondary surge protector
PC	photocell control
MC	motion control (PIR)
MW	motion control (microwave)
EM	emergency battery backup

Copyright© 2021 PacLights All Rights Reserved Specifications are subject to change at any time without notice

FLSQ LED Flood Lights

Specifications:

Lumens:
FLSQ-24 = 2880 lm
FLSQ-27 = 3240 lm
FLSQ-48 = 5760 lm
FLSQ-64 = 7680 lm

Dimensions:
FLSQ-24 = 2.95“W x 2.95”L (75 mm x 75 mm)
FLSQ-27 = 3.9“W x 3.9”L (100 mm x 100 mm)
FLSQ-48 = 3.26“W x 3.26”L (83 mm x 83 mm)
FLSQ-64 = 4.4“W x 4.4”L (112 mm x 112 mm)

Watts:
FLSQ-24 = 24W
FLSQ-27 = 27W
FLSQ-48 = 48W
FLSQ-64 = 64W

Operating Voltage 12V-24V DC
Light Color Temp 6,000K-6,500 K
Operating Temp - -40C- +85 C
Beam Angle 60 degrees
IP67
Expected Life 50,000 Hours

AFB®

Acoustical Fire Batt Insulation

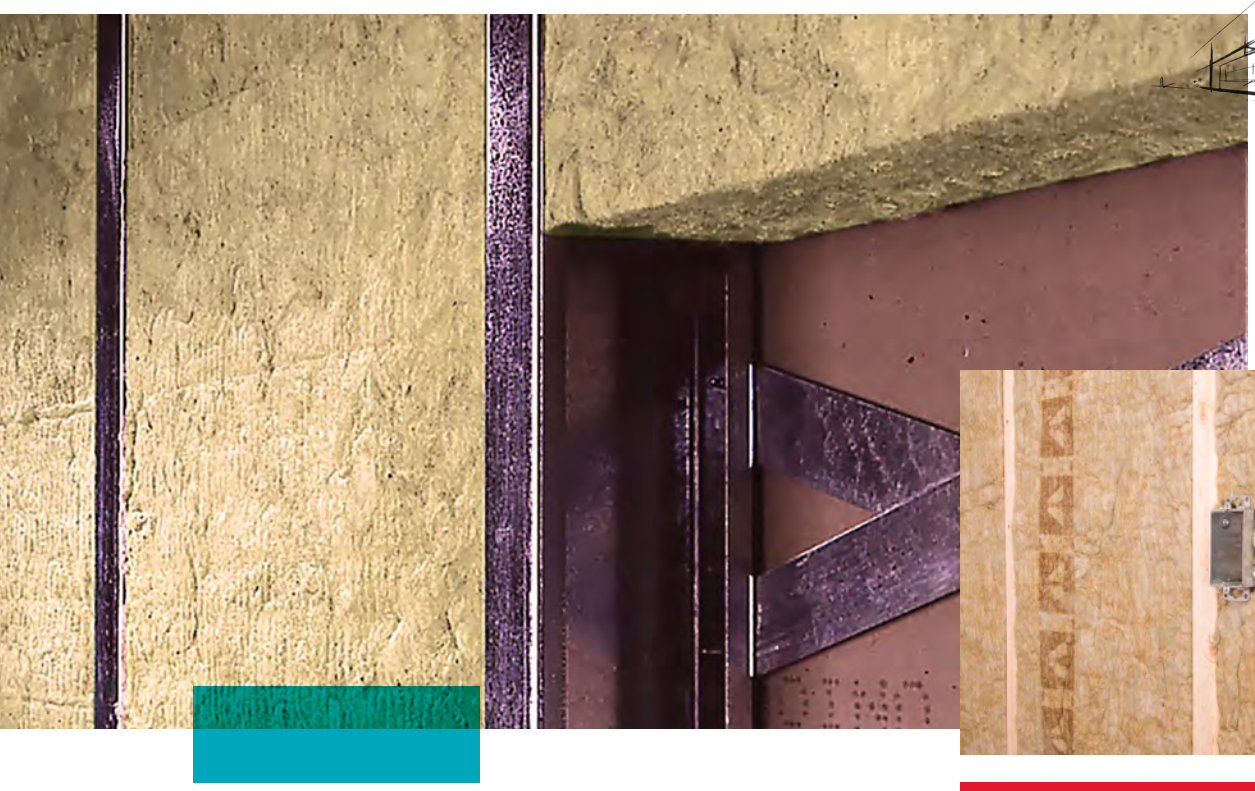

ROCKWOOL AFB® is a lightweight, acoustical fire batt stone wool insulation specifically designed for steel stud and wood stud interior wall and floor applications. Its superior sound absorbency and fire protection contribute to the overall comfort and safety of occupants.

It provides increased density that reduces sound transmission. Greater noise control is further achieved when AFB® is part of the wall assembly along with gypsum boards and resilient channels.

AFB® is non-combustible and will not develop toxic smoke or promote flame spread, even when directly exposed to fire. This helps to provide valuable extra time for people to reach safety and for fire services personnel to control the spread. It is a key component of fire-rated partitions.

AFB® comes in a number of thicknesses to meet the requirements of both retrofit and new construction applications.

Learn more at rockwool.com

Quiet Spaces

The higher density of ROCKWOOL AFB® can reduce sound transmission, helping to create a quiet and comfortable space.

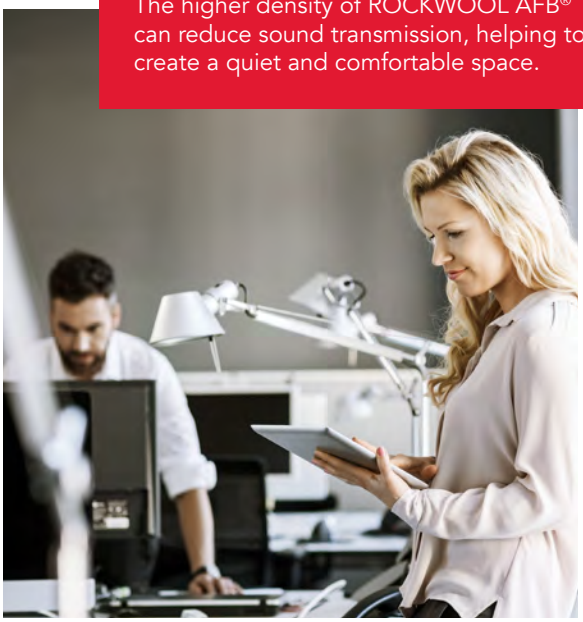

ROCKWOOL®

AFB®

Acoustical Fire Batt Insulation

Technical Data Sheet

Batt Insulation 07210 & 09820* • Blanket Insulation 07 21 16**
Acoustical Blanket Insulation 09 81 16**

ROCKWOOL AFB® is a mineral wool batt insulation for interior partitions in commercial constructions where superior fire resistance and acoustical performance are required.

	Performance	Test Standard
Compliance	Mineral Fiber Thermal Insulation for Buildings, Type 1 Compliant	CAN/ULC S702
	Mineral Fiber Blanket Thermal Insulation, Type 1 Compliant	ASTM C665
	Mineral Fiber Blanket Thermal Insulation, Type 7 Compliant	ASTM C553
	MEA Approval, New York City Approval	338-97-M
	City of Los Angeles Approval	RR 25444
Reaction to Fire	Flame spread index = 0; Smoke developed index = 0	ASTM E84 (UL 723)
	Flame spread index = 0; Smoke developed index = 0	CAN/ULC S102
	Determination of Non-combustibility of Building Materials - Non-combustible	CAN/ULC S114
	Behavior of materials at 750°C - Non-combustible	ASTM E136
	Smolder Resistance - 0.09%	CAN/ULC S129
Nominal Density	> 2.5 lbs/ft³ (>40 kg/m³)†	ASTM C303
Corrosion Resistance	Stress Corrosion Cracking Tendency of Austenitic Stainless Steel - Passed	ASTM C795
	Corrosion of Steel - Passed	ASTM C665
Air Erosion	Maximum Air Velocity - 1000 fpm (5.08 m/s)	UL 181
Thickness Dimensions	1" through 4" (25.4 mm - 101.6 mm) in 1/2" increments as well as 5" (127 mm) and 6" (152.4 mm), 15.25" x 47" (387 mm x 1194 mm), 16" x 48" (413 mm x 1219 mm), 19.2" x 47" (470 mm x 1194 mm), 23" x 47" (584 mm x 1194 mm), 24" x 48" (610 mm x 1219 mm)	

Acoustical Performance — ASTM C423

Thickness	125 Hz	250 Hz	500 Hz	1000 Hz	2000Hz	4000 Hz	NRC
1.0"	0.14	0.25	0.65	0.9	1.01	1.01	0.7
1.5"	0.18	0.44	0.94	1.04	1.02	1.03	0.85
2"	0.28	0.6	1.09	1.09	1.05	1.07	0.95
3"	0.52	0.96	1.18	1.07	1.05	1.05	1.05
4"	0.86	1.11	1.2	1.07	1.08	1.07	1.1
6"	1.11	1.28	1.15	1.06	1.03	1.01	1.15

ASTM E90

Please contact ROCKWOOL for STC ratings on tested wall assemblies

Fire Rated Designs	ULC Classification Code: BZJZC UL Classification Code: BZJZ	

For more information regarding the certifications and listings of our stone wool insulation products, please visit:

rockwool.com/certifications-and-listings

USA Specifications and Sizing

Issued 11/2022
Supersedes 01/2018

NOTE: *Master Format 1995 Edition **Master Format 2004 Edition. As ROCKWOOL has no control over installation design and workmanship, accessory materials or application conditions, ROCKWOOL does not warranty the performance or results of any installation containing ROCKWOOL's products. ROCKWOOL's overall liability and the remedies available are limited by the general terms and conditions of sale. This warranty is in lieu of all other warranties and conditions expressed or implied, including the warranties of merchantability and fitness for a particular purpose.

†Density will change with thickness. Density is not a performance criteria but is commonly referred to when specifying insulation. Actual density is the true density of the insulation and Nominal density is the effective density of the insulation relative to a historic benchmark where the insulation contained 40% non-fibrous content also known as Shot (ASTM C612-99). Please contact ROCKWOOL for more information.

ROCKWOOL®

8024 Esquesing Line, Milton, ON L9T 6W3
Tel: 800-265-6878 • Fax: 800-991-0110
rockwool.com

Polar Hardware Mfg Co., Inc.
1813 W. Montrose Ave
Chicago, IL 60613
Phone:773.935.8600 • **Fax:**773.935.8749
Email: info@polarmfg.com • **Website:** www.polarmfg.com

Item # 2008-SS, Embossed Stainless Steel Hinges

Manufactured from 304 Stainless Steel. Embossed for greater strength. For use on trailers and truck bodies. Has wide bracket with three mounting holes. Three strap lengths available. Hinges supplied with non-removable pin for maximum security.
Bracket - 6 Ga. x 4-1/2" x 3" from center of pin
Strap - 10 Ga. x 2" x 8", 12" or 16"
Pin - 1/2" Dia. Stainless Steel
1/8" Shim available.

Finish - Plain or Polished.

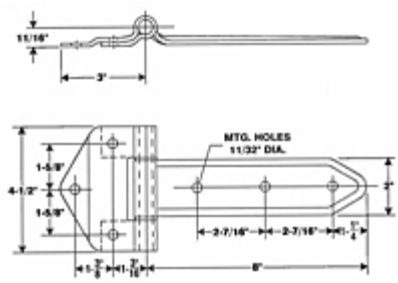

Specifications

Material	Stainless Steel
Bracket	8 Ga. x 4-1/2" x 3" from center of pin
Pin Diameter	1/2 in
Strap Size	8 Ga. x 2"
Strap Length	8 in
Mounting Hole	for 5/16" bolts
Finish	Plain Polished
Weight	2 lbs

INSTALLATION INSTRUCTIONS

0058 SafeGuard® Radial Latch

Part Number: 10058*

⚠ CAUTION

Do not lock the latch when closing the door.

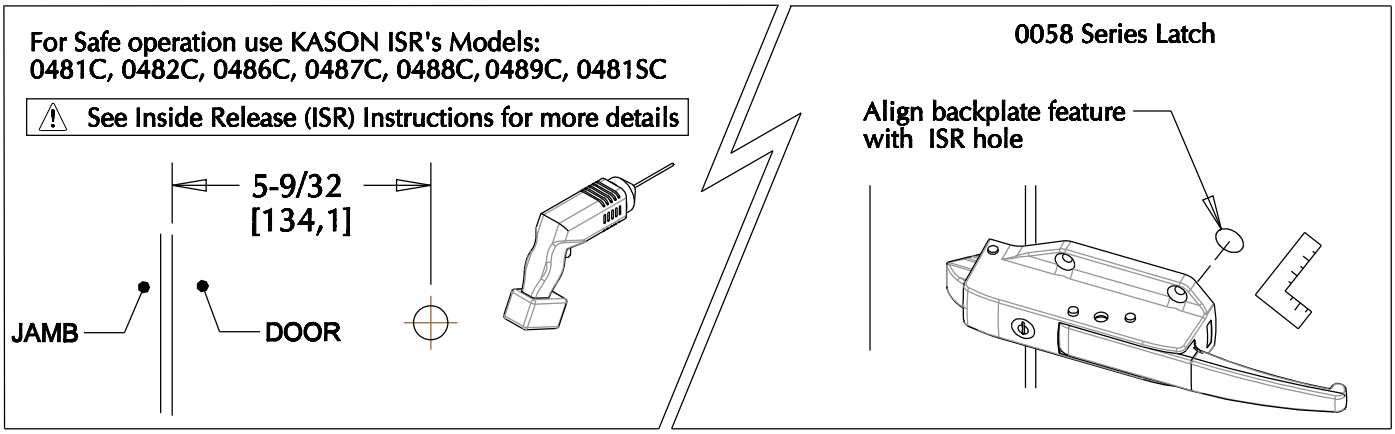

∅ 1/4 (6mm) Mounting fasteners not provided

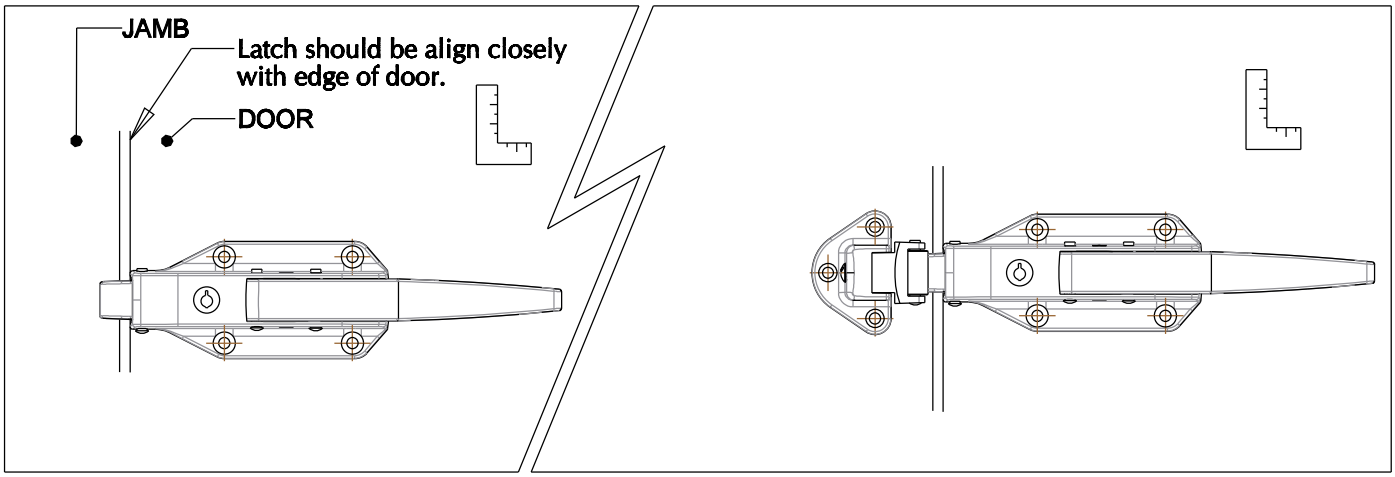

Part No.*	Description	Finish
10058CL5020	Cylinder Locking Body, Light Spring	Polished Chrome
10058L05020	Body, Light Spring	Polished Chrome
10059005001	Strike, -0.125" to 0.25" (-3.2 to 6.4 mm)	Polished Chrome
10059005002	Strike, 0.75" to 1.5" (19 to 38.1 mm)	Polished Chrome
10059005003	Strike, 1.75" to 2.5" (44.5 to 63.5 mm)	Polished Chrome
Other finishes, springs available		

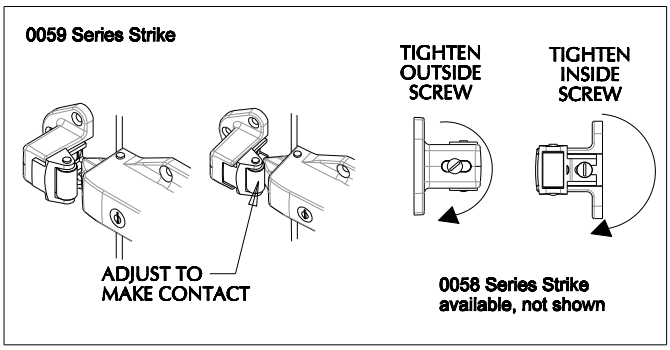

0058 SafeGuard® Radial Latch

Part Number: 10058*

1. CLOSE DOOR

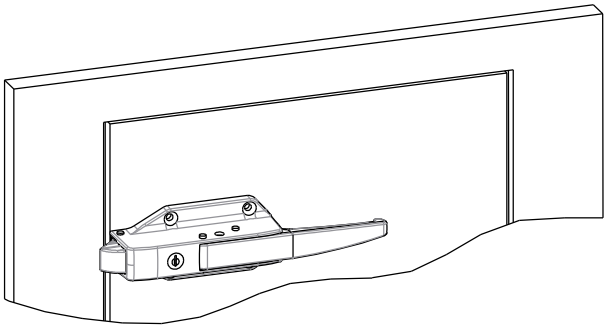

2. LOCK LATCH

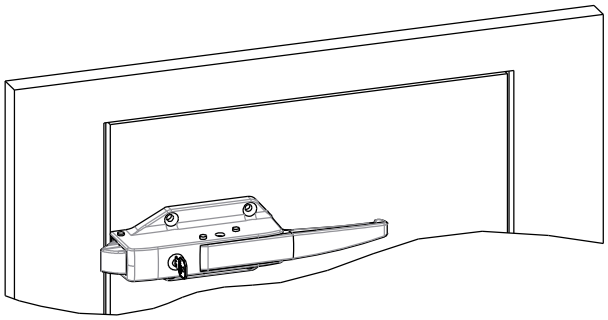

3. UNLOCK LATCH
4. OPEN DOOR
5. LEAVE THE LATCH UNLOCKED

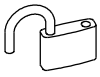

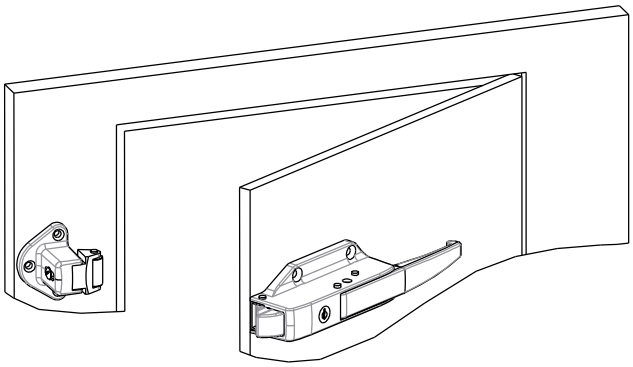

© 2021 Kason Industries, Inc. IS-0058 0821

0058 SAFEGUARD® RADIAL LATCH

RESOURCES

- Catalog
- Instructions Sheet
- Inside Release Guide
- SafeGuard® Safety Warning
- SafeGuard® Safety Decal
- SafeGuard® Safety Decal - French
- SafeGuard® Safety Decal - Spanish

- For smooth, easy closure
- Works with foam doors
- Reliable, self-closing action provides positive tight closure with little effort
- Releases with minimum pressure or pull from outside or from inside with Kason inside release handle
- Works effectively with Kason door closers
- Economical, adjustable solid head strike
- Padlocking provision standard on all models
- Strike Sold Separately
- Accepts "C" series inside release. Order separately

U.S. Trademark: 2,227,009

Specifications

MATERIAL

High pressure die-cast zinc. Stainless black plate

MOUNTING

Drilled and countersunk for 1/4" (6.0mm) screws

FINISH

Polished chrome models listed. Also available in brushed chrome, silver powder coat, or powder coated for severe environmental applications

PACKAGING

6 body assemblies per carton
6 strike assemblies per carton

WEIGHT

Body assemblies: approx. 16 lb. (7.3kg) per carton
Strike assemblies: approx. 7 lb. (3.2kg) per carton

For the best experience while viewing our site use Google Chrome, Firefox, or Internet Explorer.

© 2023 Kason Industries, Inc. | Patents | ISO Certification | Terms & Conditions

INSTALLATION INSTRUCTIONS

0481 Safety Glow Inside Release Handle
0482 Hi-Temp Inside Release Push Handle
0487 Frost-Free Inside Release Push Handle

1. Drill a 3/4" diameter (19.1mm) hole through the door from the warm side at the location of latch inside release hole. Hole must be square to door surface for proper alignment and operation. For rods using a cross pin, drill a 1" diameter (25.4 mm) x 2" deep pocket from the cold side to accommodate pin and washers.
2. Mount to the door using (3) #10 (5.0mm) round head screws.
   For Freezers, fill warm side of cavity with low temperature grease to limit air infiltration and ice formation through hole.
3. Test to assure latch release function.
   WARNING: Function is critical. Entrapment in freezer can cause severe injury or death.

Fig. 1

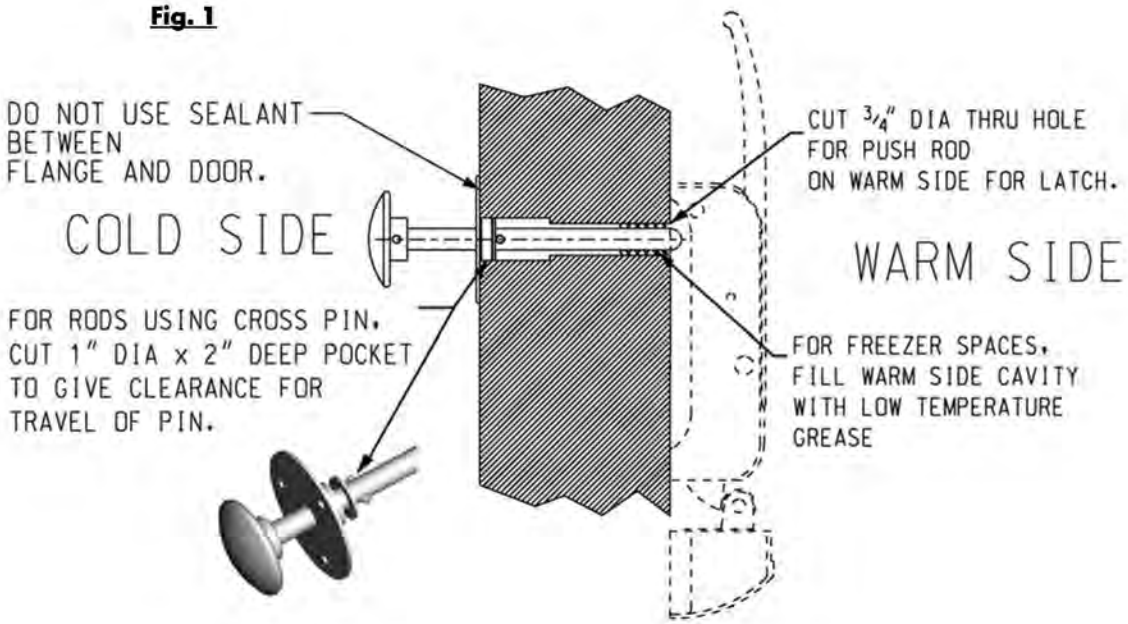

© 2022 Kason Industries, Inc. IS-0481 0522

0481 SAFETY GLOW INSIDE RELEASE HANDLE

- Stainless steel push handle for use with 0556 stainless steel latch
- Glow-in-the-dark knob

0481SA SAFETY GLOW INSIDE RELEASE HANDLE

- Stainless steel version of 0481, for use with 0556 stainless steel latch

Specifications

MATERIAL

Steel rod and flange; Safety-Glow™ plastic knob.

FINISH

Kasonized.

MOUNTING

Holes drilled for No. 10 (5. mm) screws.

TEMP RATING

-40°F to 150°F (-40°C to 65°C)

PACKAGING

24 per carton.

WEIGHT

Approx. 20 lb. (9.1kg) per carton.

RESOURCES

Catalog

Inside Release Guide

Instructions Sheet

For the best experience while viewing our site use Google Chrome, Firefox, or Internet Explorer.

© 2023 Kason Industries, Inc. | Patents | ISO Certification | Terms & Conditions

NOTES:

1. Polishing Section Requires 120VAC, Single Phase, 20A.
2. Fuel Fill / Offloading Pump (300GPM @75' Head) typically purchased by mechanical contractor from ESI separately.
3. Polishing section available in 6GPM and 10GPM configurations.
4. Fuel and DEF levels monitored by submersible pressure transducers with data transmitted to Fill / Offloading systems.
5. Stainless Steel DEF tanks available as option with optional heater and insulation.
6. Optional integration to DEF transport offloading system.
7. All data points available to customer BMS via Modbus TCP/IP or Protocol Converter. iFUEL SECURE can be monitored as individual units, or centralized communication through a manager panel. Any controller on the network can serve as the manager (up to 30 units).
8. Expandable to up to 64 generator enclosures networked to a single Offloading Pump Skid. (Requires additional network components.)

Networking Options:

1. All ESI equipment tied into and communicating through building's BMS network. Facility provides IP addresses for all ESI equipment (3 IP's per unit).

2. All ESI iFUEL SECURE units directly connected to associated fill system with single point communication through protocol converter. ESI equipment separated from building network except protocol converters.

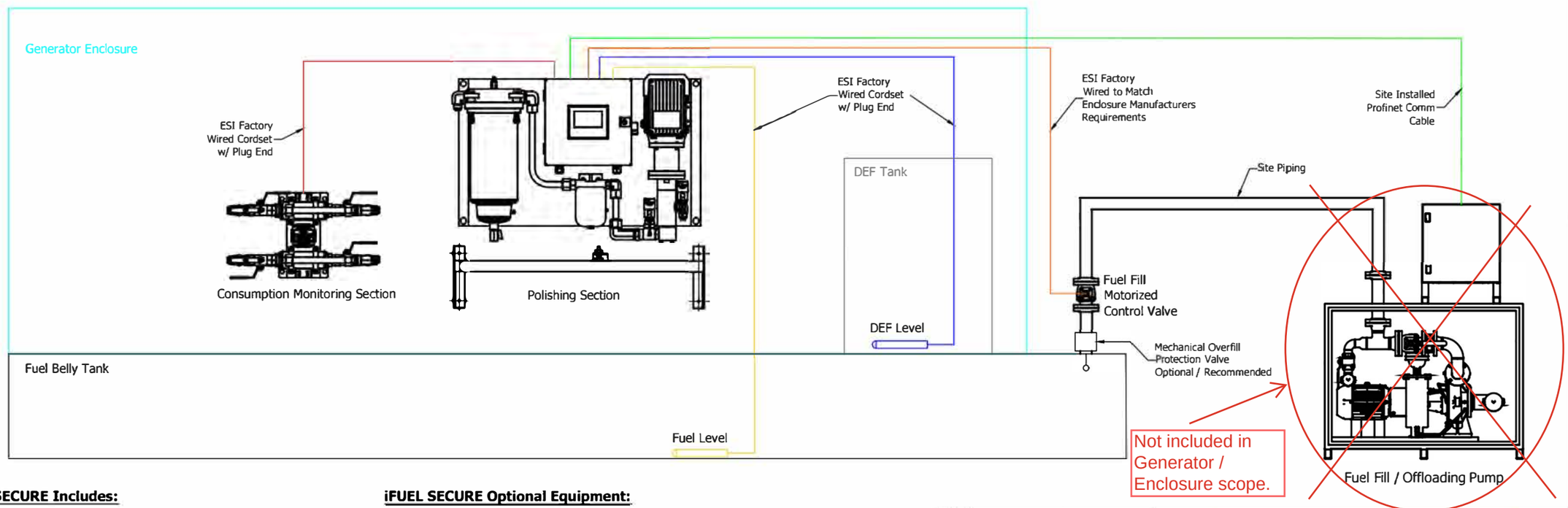

iFUEL SECURE Includes:

1. Polishing Section
2. Consumption Monitoring Section
3. Fuel Fill Motorized Control Valve
4. Fuel and DEF Level Sensors

iFUEL SECURE Optional Equipment:

1. SS DEF Tank with Heater
2. Mechanical Overfill Protection Valve

DRAWN	MHR	8/19/2024
CHECKED	ARH	8/19/2024
APPROVED		
MFG		

ESI TOTAL FUEL MANAGEMENT

All Rights Reserved. Copyright © 2024 ESI, Inc.

TITLE iFUEL SECURE
General System Layout, with Options for Fuel Tank Level, DEF Tank Level, Fill Valve Control, and Fill System Integration

SIZE B | Part No. | REV 0

SCALE N/A | DIM N/A

CONFIDENTIAL DO NOT DISTRIBUTE

THIS DRAWING AND THE DESIGNS EXPRESSED HEREIN ARE THE PROPERTY OF ESI TOTAL FUEL MANAGEMENT. THEY ARE PROVIDED FOR EXCLUSIVE PRODUCTION FOR ESI TOTAL FUEL MANAGEMENT AND MAY NOT BE REPRODUCED OR USED FOR ENGINEERING DESIGN and/or TO MANUFACTURE ANYTHING SHOWN HEREON WITHOUT PERMISSION FROM ESI TOTAL FUEL MANAGEMENT. RECIPIENT IS LIABLE FOR THE CONSEQUENCES OF IMPROPER USE AND DISTRIBUTION.

REV	Descri ptio	Date	Name

ESI TOTAL FUEL MANAGEMENT™
WHEN CONFIDENCE COUNTS
ASHBURN, VIRGINIA • HANNOVER, GERMANY

iFUEL SECURE™

iFUEL SECURE isn't just a product; it's a paradigm shift in fuel management for today's data center operations. Specifically engineered for gen-set resiliency, iFUEL SECURE is the future-proof approach to fuel security that allows data centers and mission-critical facilities to drive operations towards a future of efficiency, compliance, and sustainability.

UNLOCK OPERATIONAL RESILIENCY WITH THESE KEY FEATURES:

FUEL/DEF STORAGE INVENTORY MANAGEMENT

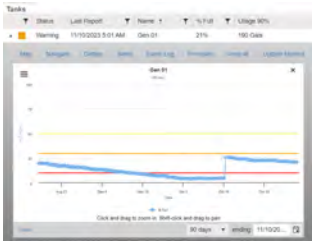

- Accurate, consistent, and temperature corrected measurements for fuel inventory on site, campus, regional and national levels.
- Visual display of Fuel/DEF tank level mounted exterior to generator enclosure to facilitate faster fuel delivery and spill prevention.
- Allows for proactive fuel level management, eliminating shortages, and enabling efficient refueling operations.
- Data is immediately accessible, eliminating the need for manual measurements.

CONSUMPTION MONITORING

- Tested and verified by Southwest Research for +/- 1% accuracy over the entire operating range, ensuring precise monitoring.
- Comprehensive fuel management and reporting capabilities for increasing run time hours for consumption based permitting.

FUEL READINESS

- Advanced filtration with aviation grade filter element.
- Engineered for today's fuels: HVOs, biodiesel, renewable, and straight run diesels.
- Aligns with ISO 4406:2021 cleanliness standards, ensuring high output generators meet the most stringent criteria for particulates and water.

ENVIRONMENTAL COMPLIANCE

- Environmental reporting made easy with consolidated reports such as run time, engine load and calculated NOx per run based on actual measured data.
- Pollution control data capable, even if SCRs are not currently installed, removing the costs involved with retrofitting equipment when they are.
- Fuel flexibility built in, allowing for seamless transition to biodiesel or biodiesel blend in pursuit of facility sustainability goals.

REAL TIME DATA

Single panel system tracks and reports: engine supply/return, flow rates, temperature, flow pulsation and instantaneous consumption rate while automating data collection for environmental reporting.

COMMUNICATIONS

Integrated network switch enables MODBUS TCP/IP communication for consolidated monitoring of fuel polishing, consumption, and tank level.

iFUEL SECURE STANDARD FEATURES

CONSUMPTION MONITORING

iFUEL SECURE offers robust fuel consumption monitoring capabilities, leveraging advanced technology, and state-of-the-art sensors to provide real-time, precise data on fuel consumption.

OVERVIEW

- Accurate fuel monitoring is crucial for complying with air permitting regulations, increasing run hours and maximizing operational flexibility in data centers.
- Utilizes the only third party* tested and verified diesel fuel consumption monitoring system with +/- 1% accuracy over the entire operating range, ensuring precise monitoring.
- Provides comprehensive fuel management and reporting capabilities, tracking engine parameters and ensuring compliance with consumption reporting requirements for air quality permits.
- The compact consumption monitoring component features a mechanical section that can be mounted to the generator enclosure wall, floor, or on the engine rail.
- Integrated bypass allows for maintenance with uninterrupted generator operation.
- Each system is factory calibrated.

*Globally renowned Southwest Research.

IT'S A FACT.

iFUEL SECURE incorporates positive displacement flow meters, selected for their accuracy, critical for compliance with permitting based on fuel consumption. These meters excel within generator enclosures, due to their tolerance and design.

In contrast, meter designs like Coriolis flow meters are unsuitable for generator environments due to their susceptibility to vibration, which is integral to their measurement method. Coriolis flow meters are better suited for to controlled settings such as laboratories or boiler rooms.

CENTRAL CONTROL PANEL

OVERVIEW

- Controls all functionality and operator interface with color display of status.
- Single connection for data interface.
- Monitor up to 6 Digital Inputs and 8 Analog Inputs; Points can be user defined and transmitted to the BMS via Modbus.
- Examples include:
  - Calculated NOx emissions per engine run
  - Engine Load/Specific Consumption
  - Interstitial Leak Sensor
  - DEF Heater Status

iFUEL SECURE STANDARD FEATURES

FUEL READINESS

iFUEL SECURE addresses the pressing concern of fuel contamination in generators. By employing a proactive approach to fuel quality, this system plays a pivotal role in maintaining the reliability and performance of data center facilities.

OVERVIEW

- Available in 6 GPM for sub base tanks up to 4,800 gallons or 10 GPM for sub base tanks up to 9,600 gallons.
- Delivers clean, water-free fuel even in challenging scenarios involving alternative fuels like HVOs and biodiesel, notorious for causing deposits, water attraction and bacterial growth,
- Meets and exceeds cleanliness standards for particulate (1 micron) and water (15 ppm) with separation of both free and emulsified water, for today's high output generators.
- Incorporates the Parker/Racor filter advanced aviation element, featuring Aquabloc 3D technology, ensuring precise filtration and optimal generator performance and uptime.
- Improves equipment reliability, minimizes repair costs, extends fluid life, and fulfills engine warranty requirements.

IT'S A FACT.

Modern engines at high pressures and tolerances need effective filtration to prevent corrosion, wear, reduced efficiency, and costly breakdowns. Selecting the right filter media is essential for optimal fuel system performance. Inadequate media can harm the fuel system.

With high pressure fuel injections exceeding 30,000 PSI and micron-level injector tolerance, even minor contaminants like dirt or water can cause problems. Water, whether free, emulsified, or entrained, and particulates can lead to microscopic surface damage, wear, and efficiency loss.

3 STAGE FILTRATION

STAGE 1: Pleated media stops particulates.

STAGE 2: Plasma treated coalescer and depth media filters and separates free and emulsified water up to 15 ppm.

STAGE 3: Central hydrophobic woven mesh prevents water droplets from exiting and re-entraining into the fuel system.

Large mesh capacity media extends filter life by separating water and not absorbing it.

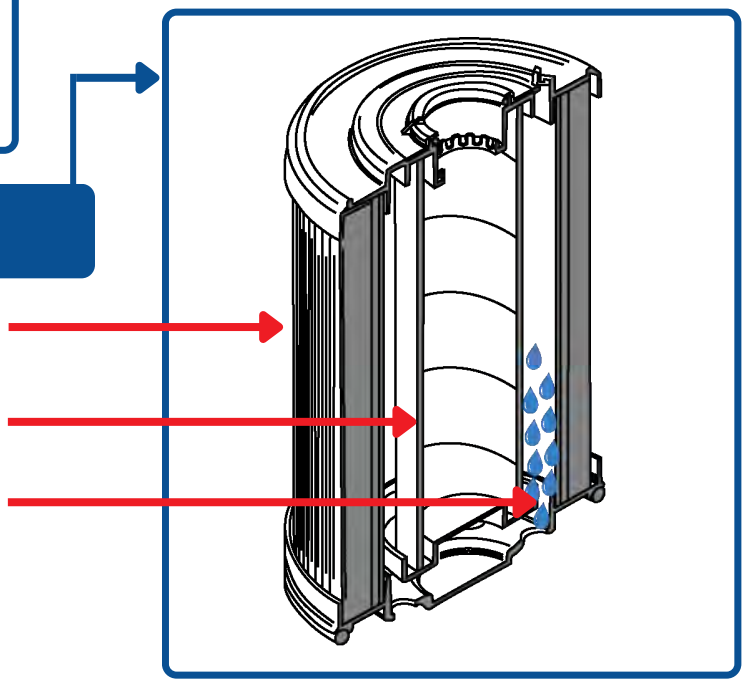

iFUEL SECURE OPTIONS

At ESI Total Fuel Management, we understand the critical importance of efficiency and precision in the technological ecosystem of data centers. Our future-proof approach allows data centers to achieve their goals of regulatory compliance, improved efficiency and enhanced operational flexibility.

FUEL/DEF INVENTORY MANAGEMENT

iFUEL SECURE's Inventory Management option provides accurate, consistent, and temperature corrected measurements for fuel inventory and delivery planning for replenishment or critical outages on the site level, campus level, regional level and national level.

Fictional site for representation purposes. Does not reflect actual data.

Tanks

Status	Last Report	Name	% Full	Ullage 90%	Full	Full (corrected)	Capacity	Contents	Location
Critical	11/12/2023 5:01 AM	Gen 02	9%	234 Gals	24.10 gals		6000	Diesel	DC 05
Critical	11/12/2023 8:01 AM	Gen 03	5%	242 Gals	13.52 gals		6000	Diesel	DC 05
Critical	11/12/2023 1:00 PM	Gen 05	8%	231 Gals	35.18 gals		6000	Diesel	DC 05
Warning	11/12/2023 5:01 AM	Gen 06	20%	192 Gals	55.72 gals	56	6000	Diesel	DC 05
Warning	11/12/2023 5:01 AM	Gen 07	20%	192 Gals	55.72 gals	56	6000	Diesel	DC 05
Warning	11/12/2023 5:01 AM	Gen 08	20%	192 Gals	55.72 gals	56	6000	Diesel	DC 05
Warning	11/12/2023 5:01 AM	Gen 09	20%	192 Gals	55.72 gals	56	6000	Diesel	DC 05
Warning	11/12/2023 5:01 AM	Gen 10	20%	192 Gals	55.72 gals	56	6000	Diesel	DC 05
Warning	11/12/2023 5:01 AM	Gen 01	20%	192 Gals	55.72 gals	56	6000	Diesel	DC 05
Minor	11/12/2023 1:00 PM	Gen 04	38%	131 Gals	94.53 gals		6000	Diesel	DC 05

INVENTORY MANAGEMENT OVERVIEW

- Wireless tank monitoring that provides measurements on fuel levels in multiple tanks, across multiple sites with real time access to data.
- Utilizing best in class technology, the simple dashboard can provide insight into fuel and/or DEF inventory for capital reasons or to identify consumption patterns that can allow for proactive fuel level management, eliminating shortages, and enabling efficient refueling operations.
- Tank level readings provide tank data on gallons until ullage at 90% and the temperature corrected (at 60 degrees F) measurement of the data to insure consistency in inventory reports across sites, regions and on a national level.
- Data is stored and can easily be accessed. A tiered permissions hierarchy can be established, allowing reports and data to only be accessed by users according to pre-determined parameters.
- Open API connection allows for data to be exported to other locations.
- Durable tank sensors can be programmed to take readings when desired.

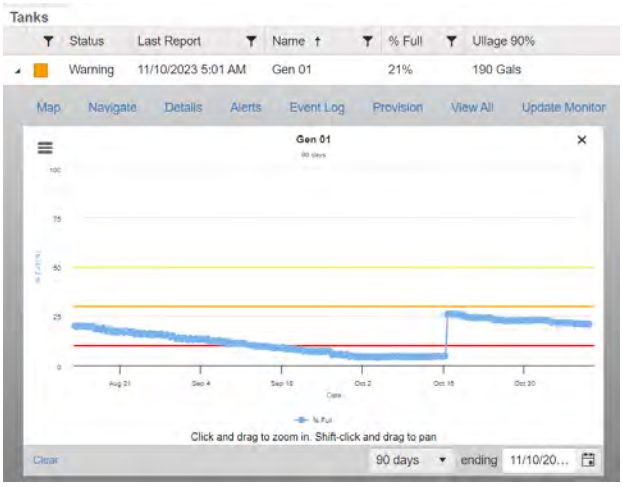

- **Map** provides visual geographic location of the individual tank.
- **Navigation** provides directions to the individual tank.
- **Details** includes additional meta data for the individual tanks.
- **Alerts** provides report of alerts over time. Emails or texts are automatically sent to preselected users when a critical warning or alert event occurs.
- **Event Log** is a report on the dates sensor batteries are replaced and contains a section for field notes.
- **Provision** allows the user to set the tolerances for alerts and unreported alerts.

© 2023 ESI TOTAL FUEL MANAGEMENT ALL RIGHTS RESERVED

iFUEL SECURE OPTIONS

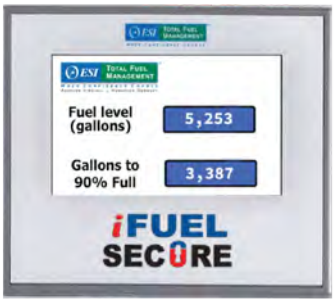

FUEL/DEF INVENTORY MANAGEMENT

iFUEL SECURE's Visual Display Tank Level is designed to reduce fuel delivery complications and improve safety. By eliminating the need for manual tank gauging, sites will no longer require tank climbing or enclosure entry for fill events. iFUEL SECURE adds an additional layer of protection for all aspects of fuel inventory management.

VISUAL DISPLAY TANK LEVEL OVERVIEW

- iFUEL SECURE offers a visual display mounted **OUTSIDE** the generator enclosure, facilitating faster fuel delivery and preventing spills.
- Eliminating the need for manual measurements, this real time data streamlines the fuel delivery process, optimizing the time of everyone involved.
- Allows operators to easily check fuel levels, plan efficient delivery, and reduce their exposure to hazardous substances and the potential for injury.
- The Remote Fill Control allows for the ability to operate a fill valve for integration with a central fill/offloading system to maintain tank levels and receive large truck deliveries.

The data provided through iFUEL SECURE's fuel/DEF tank level sensors can be consolidated to display fuel and/or DEF inventory for individual enclosures as well as facility wide and more. With options that include ESI's unique communications integration into building management systems or more advanced data management, iFUEL SECURE is the inventory monitoring system that does it all.

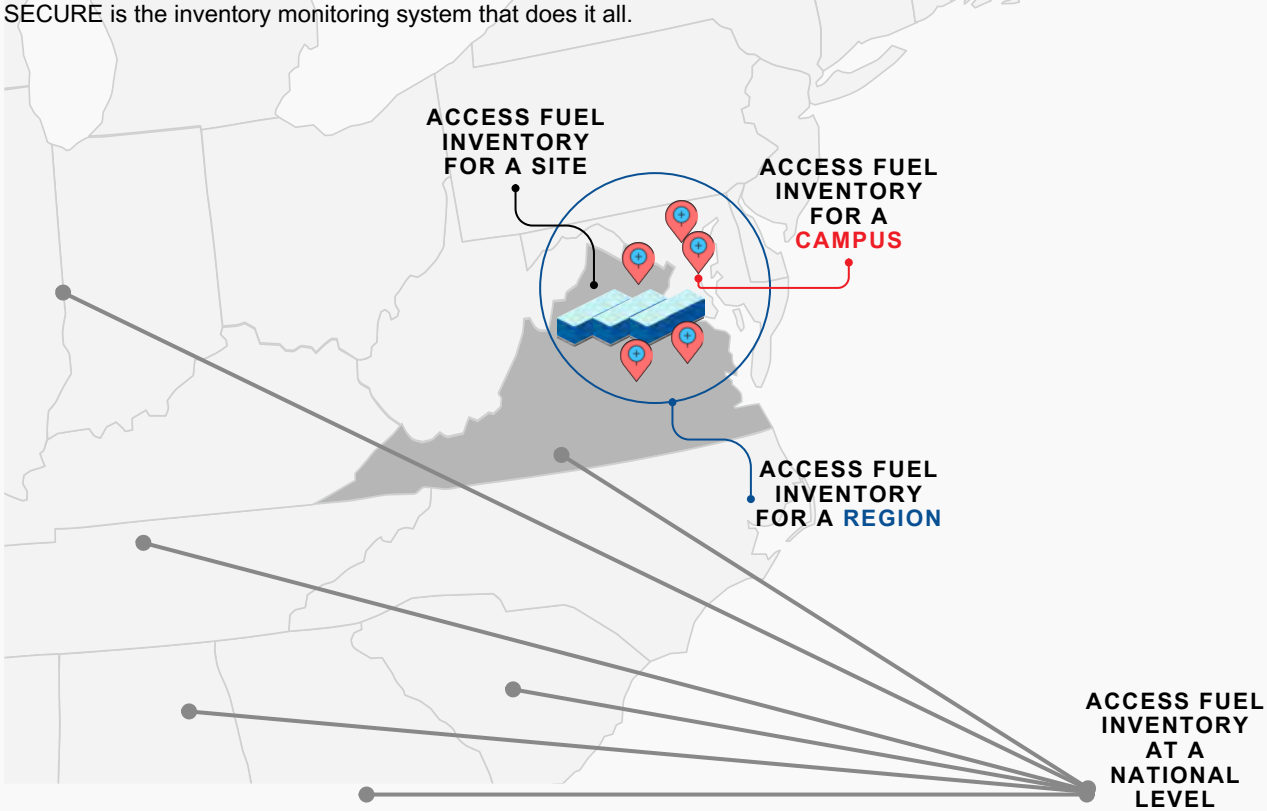

© 2023 ESI TOTAL FUEL MANAGEMENT ALL RIGHTS RESERVED

iFUEL SECURE OPTIONS

In addition to the Fuel/DEF Inventory Management option, iFUEL SECURE also includes the option for the readiness for the integration of comprehensive fuel management system that integrates a central offloading portal with existing fuel tanks. This option allows a facility to further optimize fuel delivery with the ability to accept larger fuel trucks. Larger trucks mean faster fuel deliveries, making a central offloading portal a critical need to prevent fuel shortages during emergency operations.

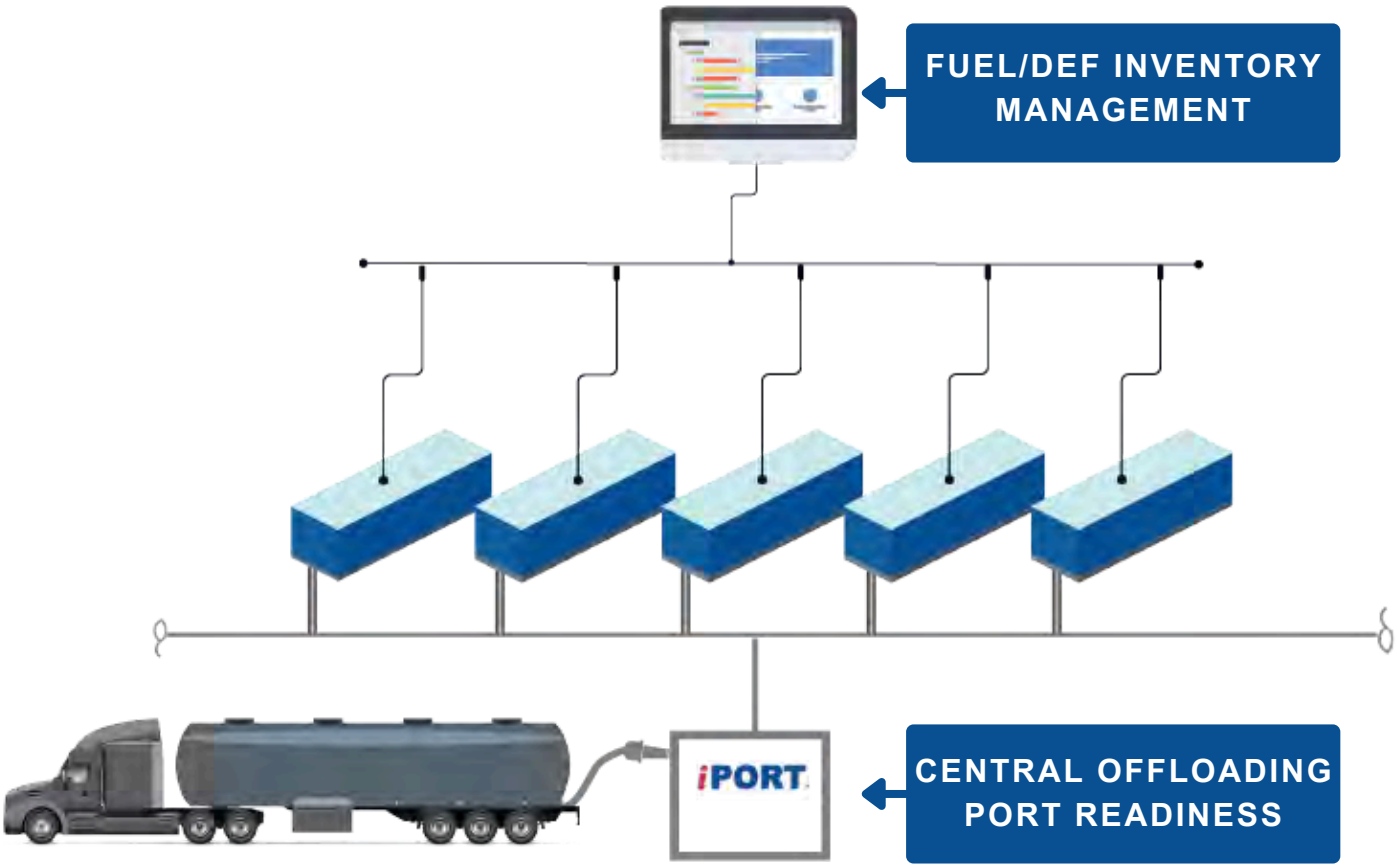

The ESI offers central offloading as a scalable solution designed specifically for mission-critical facilities like data centers. This system enhances the management of bulk fuel storage by integrating high-speed transfer and offloading capabilities and fuel distribution to generator-operating sub-base/day tanks.

CENTRAL OFFLOADING BENEFITS

- Cost savings
- Increased operator safety
- Spill prevention
- Operational optimization
- Access to additional fuel transportation resources
- Fuel Delivery efficiency
- Future scalability
- Eliminates the need for pump trucks, enabling facilities to receive 40% more fuel pumped in just 35 minutes.

© 2023 ESI TOTAL FUEL MANAGEMENT ALL RIGHTS RESERVED

McMASTER-CARR®

Low-Pressure 304/304L Stainless Steel Forged Pipe Flange

2 NPT

$81.04 Each
44685K16

For Use With	Air, Natural Gas, Oil, Steam, Water
Shape	Straight
Type	Flange, Adapter
Material	304/304L Stainless Steel
Pressure Class	150
Fabrication	Forged
Connection Type	Pipe
Connection Style	Threaded × Flanged
Thread Type	NPT
Gender	Female
Pipe Size	2
Flanged Connection Surface	Raised
Flange OD	6"
For Bolt Diameter	5/8"
Bolt Hole	
Diameter	0.75"
Number of	4
Bolt Circle Diameter	4 3/4"
Maximum Pressure	230 psi @ 72° F
Maximum Steam Pressure	150 psi @ 360° F
For Fitting	
Class	150
Material	304 Stainless Steel, 304/304L Stainless Steel
For Pipe	
Schedule	40
Material	304 Stainless Steel, 304/304L Stainless Steel
Specifications Met	ASME B16.5, ASTM A182
Weight	5.23 lbs.
RoHS	RoHS 3 (2015/863/EU) Compliant
REACH	REACH (EC 1907/2006) (06/10/2022, 224 SVHC) Compliant
DFARS	Specialty Metals COTS-Exempt
Country of Origin	United States
USMCA Qualifying	No
Schedule B	730721.0000
ECCN	2B999

Also known as Pressure Class 150 flanges, these are designed for low-pressure pipe applications. Bolt two flat-surface flanges or two raised-surface flanges of the same size together with a gasket (sold separately) to create an access point within a line.

304 stainless steel flanges have very good corrosion resistance.

Forged flanges have better strength than cast flanges. They are also called ANSI flanges.

McMASTER-CARR®

Low-Pressure Steel Threaded Pipe Flanges for Low Temperatures

Front

Raised Surface on Back

- For Use With: Air, Natural Gas, Oil, Steam, Water
- Pressure Class: 150
- Temperature Range: -40° to 800° F
- Specifications Met: ASME B16.5, ASTM A350, MSS SP-25
- Certification: Material Certificate with Traceable Lot Number and Test Report
- Fittings: Use Schedule 40 ASTM A420 carbon steel
- Pipe Nipples and Pipe: Use Schedule 40 ASTM A333 carbon steel

Use these Pressure Class 150 pipe flanges in low-pressure lines where temperatures drop down to -40° F. Even as temperatures drop, these flanges won't become brittle, so they absorb impact better than our other low-pressure steel flanges. All have been impact tested to verify their toughness. Bolt two flanges together with a gasket to create an access point within a line. With threaded connections, you can take them apart for maintenance and repairs.

CAD For technical drawings and 3-D models, click on a part number.

Pipe Size	Flange OD	For Bolt Dia.	Bolt Hole Dia.	No. of	Bolt Circle Dia.	Max. Pressure	Max. Steam Pressure	Material		Each
NPT										
3	7 1/2"	5/8"	3/4"	4	6"	285 psi @ 72° F	230 psi @ 300° F	A350 LF2 Steel	**5281N18**	$57.98

Low-Pressure Steel Pipe Flange for Low Temperatures, 3 NPT

Each

ADD TO ORDER

Delivers in up to 7 weeks

Product Detail

DCL INTERNATIONAL RESERVES THE RIGHT TO REVISE THE INTERNAL DESIGN WITHOUT NOTICE

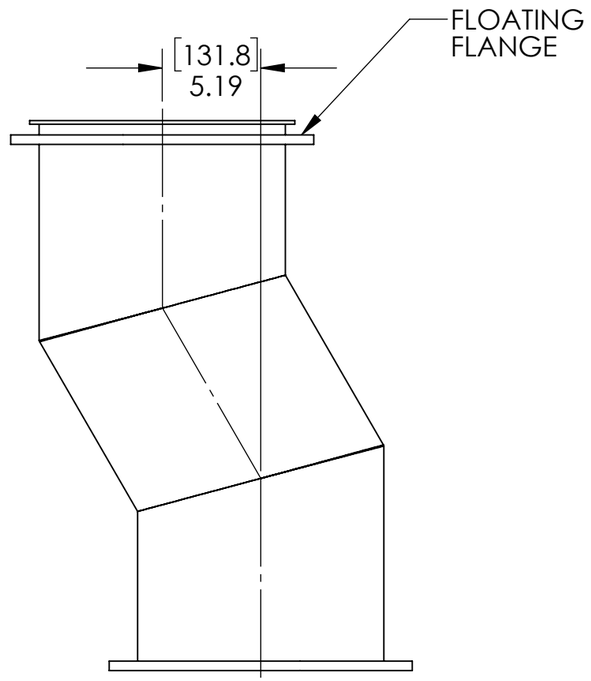

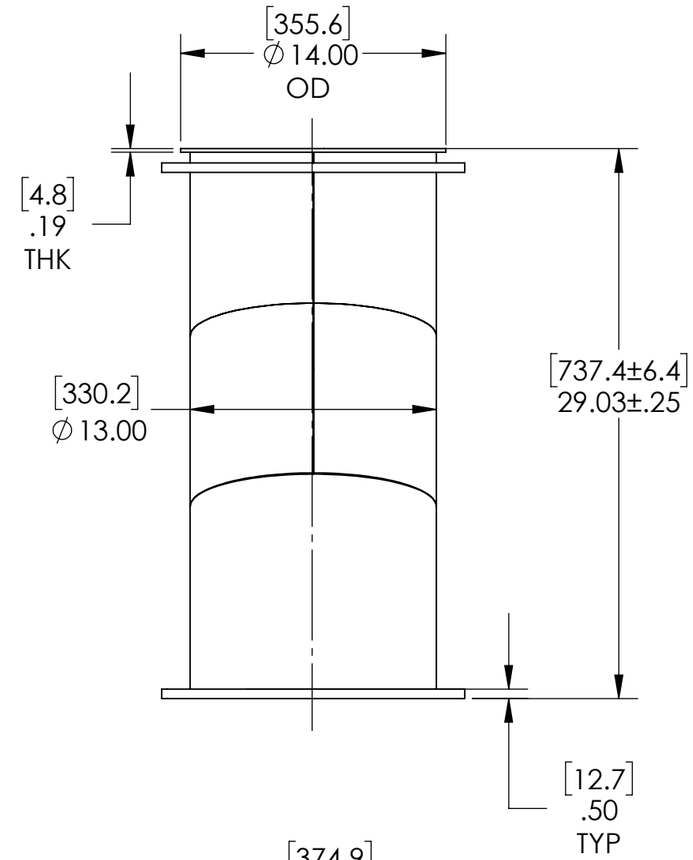

MATERIAL	PIPE & FLANGE: CARBON STEEL
WEIGHT	APPROX:~62 LBS (28 KGS)
SURFACE FINISH	CARBON STEEL: HEAT RESISTANT BLACK PAINT

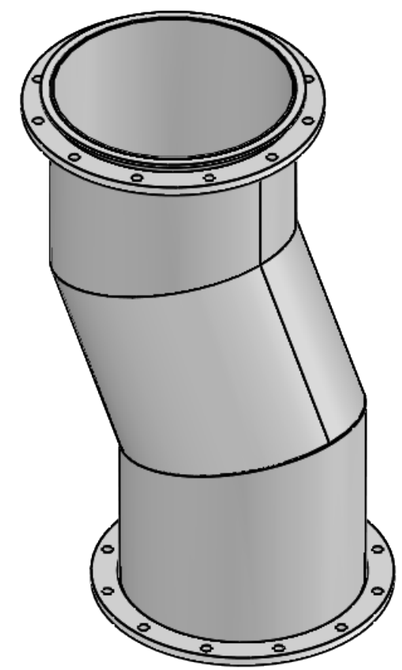

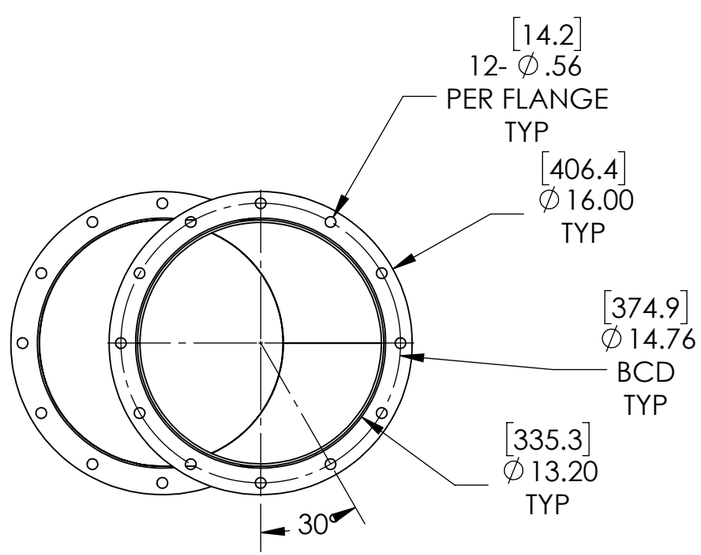

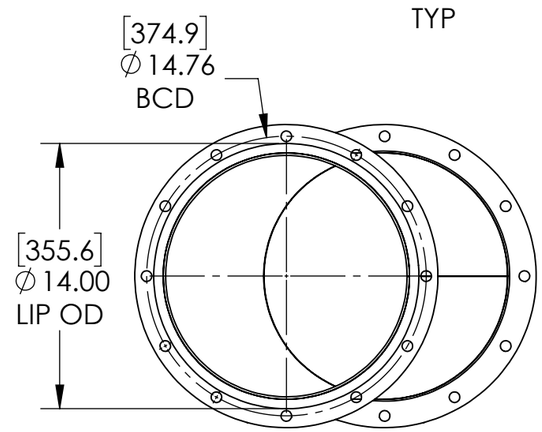

**** The calculated pressure drop over the Spool and Expansion Joint is 0.04 psi ****

EO-21232

DCL International Inc.

UNLESS OTHERWISE NOTED
1. REMOVE ALL BURRS AND SHARP EDGES
2. DIMENSIONS ARE IN INCHES
3. [ ] DIMENSIONS ARE IN MILLIMETERS

TOLERANCES
.X ±.2 [-] ±5
.XX ±.10 [.X] ±2.5
.XXX ±.060 [.XX] ±1.50
ANGULAR TOLERANCE ±2°

THIRD ANGLE PROJECTION

DCL INTERNATIONAL INC. RESERVES PROPRIETARY RIGHTS TO THIS DRAWING AND THE DATA SHOWN THEREON AND SUBMITS IT IN CONFIDENCE ONLY. SAID DATA AND/OR DRAWING ARE NOT TO BE USED OR REPRODUCED FOR ANY PURPOSE WITHOUT THE EXPRESS CONSENT OF DCL INTERNATIONAL INC.

NO	REVISION	DRAWN BY	YY/MM/DD	CHK'D BY
A	ADD LIP FOR FLOATING FLANGE	YKY	25/02/27	
0	INITIAL RELEASE	CT	25/02/06	

TITLE: **ENGINE EXHAUST BELLOW**	ORIG. P/N: **710703509**
APPLICATION:	ENGINE:
	PART NO. **X1600-C4776-10**
PAPER SIZE: / SCALE:	FILE NAME: **X1600-C4776-10S**

DCL INTERNATIONAL RESERVES THE RIGHT TO REVISE THE INTERNAL DESIGN WITHOUT NOTICE

*** The calculated pressure drop over the Spool and Expansion Joint is 0.04 psi ***

MATERIAL	BELLOW: 321 STAINLESS STEEL
	PIPE & FLANGE: CARBON STEEL
WEIGHT	APPROX:~115 LBS (52 KGS)
SURFACE FINISH	STAINLESS STEEL: NO PAINT
	CARBON STEEL: HEAT RESISTANT BLACK PAINT

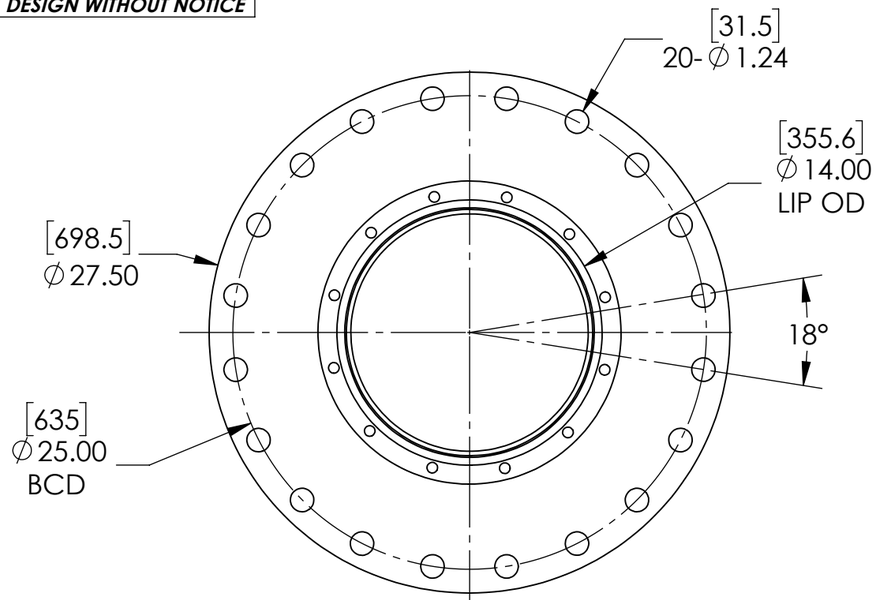

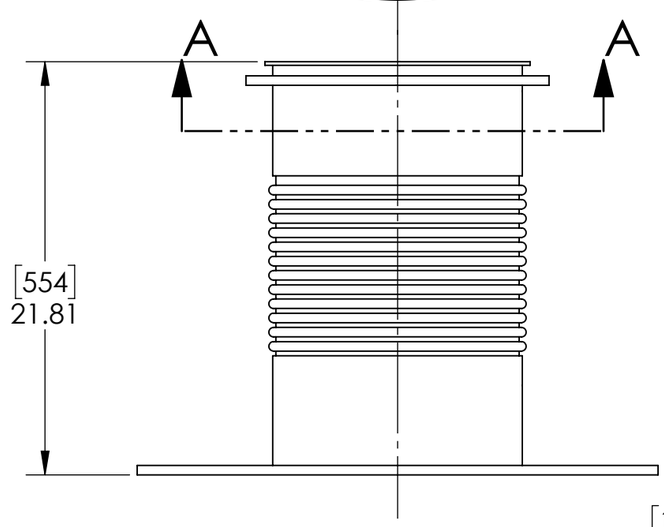

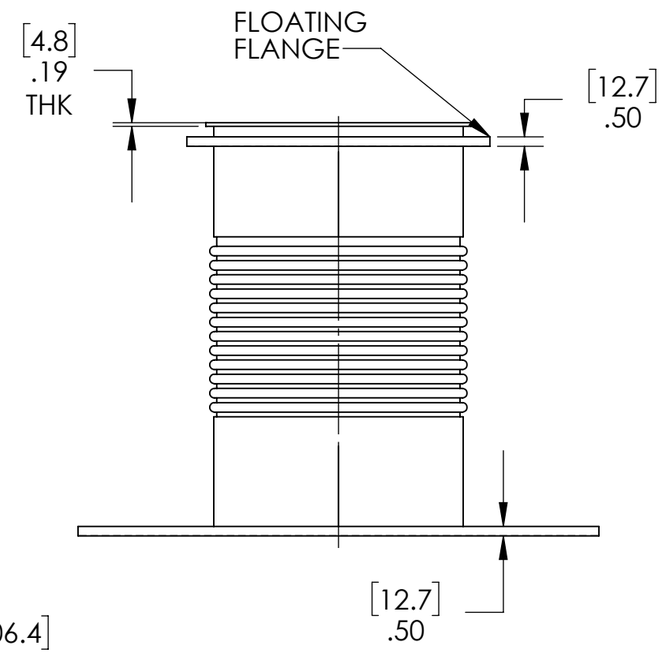

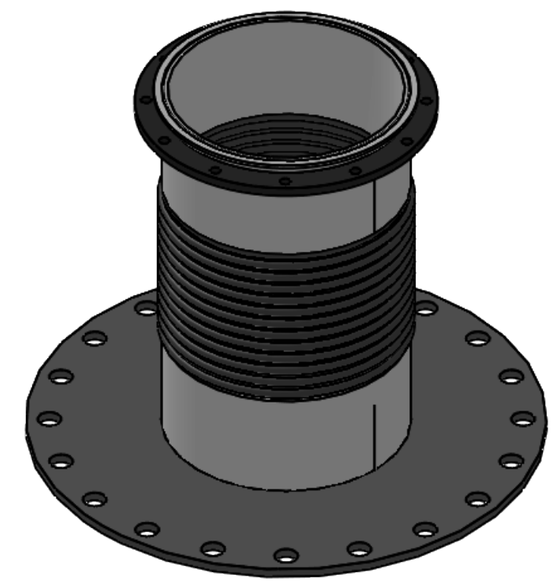

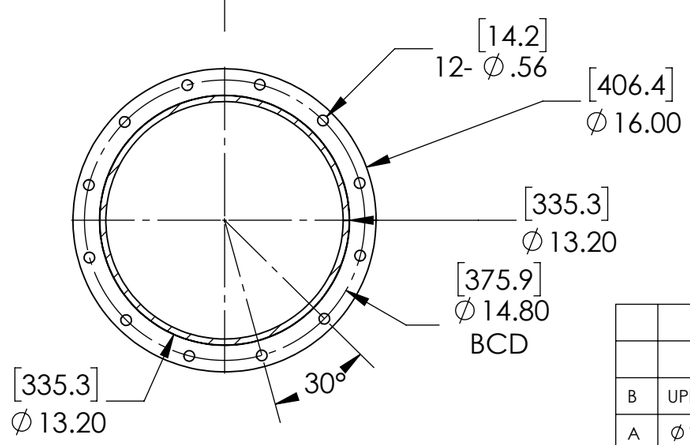

SECTION A-A

EO-21232

DCL International Inc.

UNLESS OTHERWISE NOTED

1. REMOVE ALL BURRS AND SHARP EDGES
2. DIMENSIONS ARE IN INCHES
3. [ ] DIMENSIONS ARE IN MILLIMETERS

TOLERANCES

.X ±.2	[-] ±5
.XX ±.10	[.X] ±2.5
.XXX ±.060	[.XX] ±1.50

ANGULAR TOLERANCE ±2°

THIRD ANGLE PROJECTION

DCL INTERNATIONAL INC. RESERVES PROPRIETARY RIGHTS TO THIS DRAWING AND THE DATA SHOWN THEREON AND SUBMITS IT IN CONFIDENCE ONLY. SAID DATA AND/OR DRAWING ARE NOT TO BE USED OR REPRODUCED FOR ANY PURPOSE WITHOUT THE EXPRESS CONSENT OF DCL INTERNATIONAL INC.

B	UPDATE FLOATING LIP	YKY	25/02/27	
A	∅1.24" WAS 0.56	CT	25/02/11	
0	INITIAL RELEASE	CT	25/02/06	
NO	REVISION	DRAWN BY	YY/MM/DD	CHK'D BY

TITLE: **EXPANSION JOINT**

ORIG. P/N: **710703133**

APPLICATION:

ENGINE:

PART NO. **X3200-C4776-10**

PAPER SIZE:

SCALE:

FILE NAME: **X3200-C4776-10S**

Prepared By:
James Strasburg
Graybar Electric
15501 Northwest Freeway
Houston, TX 77040
james.strasburg@graybar.com
D:713-423-2332

Proposal Name: Project Cloud

Quote Name: Project Cloud

Proposal Number: P-241112-4860909

Quote Number: Q-5486819

Through Addenda Number: 0

Sales Representative: Michael Fulford

Conditions of Sale

This Quotation is subject to Coordinated Project Terms. See https://www.se.com/us/en/download/document/0100PL0043/

Quoted price in currencies other than U.S. Dollars is per the annual Schneider Electric exchange guidance.
Quote is valid for 30 days. Quoted lead times are approximate and subject to change.

Schneider Electric reserves the right to amend, withdraw or otherwise alter this submission without penalty or charge as a result of any event beyond its control arising from or due to the current Covid-19 epidemic or events subsequent to this epidemic / pandemic including changes in laws, regulations, by laws or direction from a competent authority.

Seq #	Qty	Product Description
1	81	**Designation :** 480V **Product Details:** 81 - NF MB Panel (INTERIOR)-NF Panelboard Consisting of 480Y/277V 3Ph 4W 60Hz SCCR: 14kA Fully Rated Single Main: 150A/3P JD Circuit Breaker Incoming Conductors: 1 - #4 - 4/0 AWG AL Ground Bar Bus: 250A Rated Aluminum: Tin Plated 30 Circuit Interior Type 1,Box: 50H x 20W x 5.75D Incoming: Top Trim: Surface with Door Box Cat No: MH50 Front Cat No: NC50S Ref. Drawing: PBA553 Feeders: 1 - 60A/3P EDB 3 - 20A/3P EDB Optional Features: Standard Panel (Box Ahead),Standard Solid Neutral,Standard Ground Bar 81 - MH50-PANELBOARD ENCLOSURE/BOX TYPE 1 50H 20W 81 - NC50S-PANELBOARD COVER/TRIM NF TYPE 1 S 50H

Seq #	Qty	Product Description
2	81	**Designation :** 480V **Product Details:** 81 - NF MB Panel (INTERIOR)-NF Panelboard Consisting of 480Y/277V 3Ph 4W 60Hz SCCR: 14kA Fully Rated Single Main: 150A/3P JD Circuit Breaker Incoming Conductors: 1 - #4 - 4/0 AWG AL Ground Bar Bus: 250A Rated Aluminum: Tin Plated 30 Circuit Interior Type 1,Box: 50H x 20W x 5.75D Incoming: Top Trim: Surface with Door Box Cat No: MH50 Front Cat No: NC50S Ref. Drawing: PBA553 Feeders: 1 - 60A/3P EDB 3 - 20A/3P EDB Optional Features: Standard Panel (Box Ahead),Standard Solid Neutral,Standard Ground Bar 81 - MH50-PANELBOARD ENCLOSURE/BOX TYPE 1 50H 20W 81 - NC50S-PANELBOARD COVER/TRIM NF TYPE 1 S 50H

Seq #	Qty	Product Description
3	81	**Designation :** 120V **Product Details:** 81 - NQ MB Panel (INTERIOR)-NQ Panelboard Consisting of 208Y/120V 3Ph 4W 60Hz SCCR: 10kA Fully Rated Single Main: 100A/3P QOB Circuit Breaker Incoming Conductors: 1 - #4 - 2/0 AWG AL Ground Bar Bus: 100A Rated Aluminum: Tin Plated 30 Circuit Interior Type 1,Box: 32H x 20W x 5.75D Incoming: Top Trim: Surface with Door Box Cat No: MH32 Front Cat No: NC32S Ref. Drawing: PBA703A

Feeders:
3 - 20A/2P QOB
10 - 20A/1P QOB
11 - 20A/1P QOB Prepared Space
Optional Features:
Standard Panel (Box Ahead),Standard Solid
Neutral,Standard Ground Bar
81 - MH32-PANELBOARD ENCLOSURE/BOX TYPE 1 32H 20W

81 - NC32S-PANELBOARD COVER/TRIM NF TYPE 1 S 32H

Seq #	Qty	Product Description
4	81	**Designation :** 120V **Product Details:** 81 - NQ MB Panel (INTERIOR)-NQ Panelboard Consisting of 208Y/120V 3Ph 4W 60Hz SCCR: 10kA Fully Rated Single Main: 100A/3P QOB Circuit Breaker Incoming Conductors: 1 - #4 - 2/0 AWG AL Ground Bar Bus: 100A Rated Aluminum: Tin Plated 30 Circuit Interior Type 1,Box: 32H x 20W x 5.75D Incoming: Top Trim: Surface with Door Box Cat No: MH32 Front Cat No: NC32S Ref. Drawing: PBA703A Feeders: 3 - 20A/2P QOB 10 - 20A/1P QOB 11 - 20A/1P QOB Prepared Space Optional Features: Standard Panel (Box Ahead),Standard Solid Neutral,Standard Ground Bar 81 - MH32-PANELBOARD ENCLOSURE/BOX TYPE 1 32H 20W 81 - NC32S-PANELBOARD COVER/TRIM NF TYPE 1 S 32H

REV	DESCRIPTION	BY	DATE	–	----	--	--/--/--
–	----	--	--/--/--	–	----	--	--/--/--

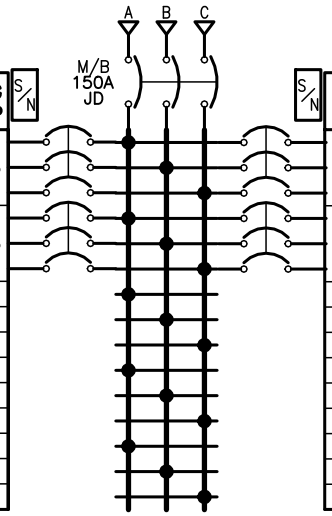

CKT NO	ACCESSORIES	TYPE	RATING AMP/P	RATING AMP/P	TYPE	ACCESSORIES	CKT NO
1		EDB	60/3	20/3	EDB		2
3							4
5							6
7		EDB	20/3	20/3	EDB		8
9							10
11							12
13	BLANK					BLANK	14
15	BLANK					BLANK	16
17	BLANK					BLANK	18
19	BLANK					BLANK	20
21	BLANK					BLANK	22
23	BLANK					BLANK	24
25	BLANK					BLANK	26
27	BLANK					BLANK	28
29	BLANK					BLANK	30

PHYSICAL DATA

ENCLOSURE Type 1
Surface with Door
FRONT CAT#: NC50S
BOX CAT#: MH50

DIMENSIONS:
50''(1270mm)Hx20"(508mm)Wx5.75''(146mm)D

WIRE BENDING SPACE:
TOP – 12.75"(324)mm
BOTTOM – 5"(127)mm
SIDE – 4.1"(105)mm
PBA: 553

BUSSING: 250A RATED ALUMINUM BUS
Tin Plated

OPTIONAL FEATURES:
ALUMINUM SOLID NEUTRAL
ALUMINUM GROUND BAR

ELECTRICAL DATA

SYSTEM: 480Y/277V 3Ph 4W 60Hz
System Ampacity: 150A
14kA SYMS. SCCR
Fully Rated

MAIN: MAIN BREAKER JD 150A
Top FEED
18kA AIR
INCOMING CONDUCTORS(S) PER NEC, CEC, NOM:
Wire Bending Space:
Phase Lugs:1 – #4 – 4/0 AWG

----------BRANCH SUMMATION----------

1 – 60A/3P EDB
3 – 20A/3P EDB

JOB NAME:	Project Cloud	EQUIPMENT DESIGNATION:	480V
JOB LOCATION:		EQUIPMENT TYPE:	NF (Circuit Breaker Type) PANEL 1 OF 1
DRAWN BY:	CAD	DRAWING TYPE:	ONE LINE DIAGRAM
ENGR:			SQUARE D by Schneider Electric
DATE:	December 17 2024		
DRAWING STATUS:	QUOTE	DWG# 0Q-5486819-163637651-01	PG 1 OF 1 REV –

REV	DESCRIPTION	BY	DATE	–	----	--	--/--/--
–	----	--	--/--/--	–	----	--	--/--/--

CKT NO	ACCESSORIES	TYPE	RATING AMP/P	S/N	A B C	S/N	RATING AMP/P	TYPE	ACCESSORIES	CKT NO
1		QOB	20/2				100/3	QOB	BRANCH MOUNTED MAIN	2
3										4
5		QOB	20/2							6
7							20/2	QOB		8
9		QOB	20/1							10
11		QOB	20/1				20/1	QOB		12
13		QOB	20/1				20/1	QOB		14
15		QOB	20/1				20/1	QOB		16
17		QOB	20/1				20/1	QOB		18
19		QOB	20/1				20/1	QOB	PREPARED SPACE	20
21	PREPARED SPACE	QOB	20/1				20/1	QOB	PREPARED SPACE	22
23	PREPARED SPACE	QOB	20/1				20/1	QOB	PREPARED SPACE	24
25	PREPARED SPACE	QOB	20/1				20/1	QOB	PREPARED SPACE	26
27	PREPARED SPACE	QOB	20/1				20/1	QOB	PREPARED SPACE	28
29	PREPARED SPACE	QOB	20/1				20/1	QOB	PREPARED SPACE	30

PHYSICAL DATA

ENCLOSURE Type 1
Surface with Door
FRONT CAT#: NC32S
BOX CAT#: MH32

DIMENSIONS:
32''(813mm)Hx20"(508mm)Wx5.75''(146mm)D

WIRE BENDING SPACE:
TOP – 9.6"(244)mm
BOTTOM – 3.25"(83)mm
SIDE – 6.13"(156)mm
PBA: 703A

BUSSING: 100A RATED ALUMINUM BUS
Tin Plated

OPTIONAL FEATURES:
ALUMINUM SOLID NEUTRAL
ALUMINUM GROUND BAR

ELECTRICAL DATA

SYSTEM: 208Y/120V 3Ph 4W 60Hz
System Ampacity: 100A
10kA SYMS. SCCR
Fully Rated

MAIN: MAIN BREAKER QOB 100A
Top FEED
10kA AIR
INCOMING CONDUCTORS(S) PER NEC, CEC, NOM:
Wire Bending Space:
Phase Lugs:1 – #4 – 2/0 AWG

----------BRANCH SUMMATION----------

3 – 20A/2P QOB
10 – 20A/1P QOB
11 – 20A/1P–PS QOB

JOB NAME:	Project Cloud	EQUIPMENT DESIGNATION:	120V
JOB LOCATION:		EQUIPMENT TYPE:	NQ (Circuit Breaker Type) PANEL 1 OF 1
DRAWN BY:	CAD	DRAWING TYPE:	ONE LINE DIAGRAM
ENGR:			SQUARE D by Schneider Electric
DATE:	December 17 2024		
DRAWING STATUS:	QUOTE	DWG# 0Q-5486819-163637761-01	PG 1 OF 1 REV –

Line Number	Label	Part Number / Description	Quantity	UOM
1		Transformers SG3A0030KB: 3ph 30kVA 480V-208Y/120V 60Hz AL	162	ea

Technical Particulars:
Product Line: Sentinel General Purpose
Duty: General Duty
Non-Linear Load (K-Factor Rating): General Purpose
Phase: 3
Rating: 30 kVA
Frequency: 60Hz
Primary Voltage: 480D
Primary Connection: Delta
Primary BIL: 10kV
Primary FCAN (NPL): 2x2.5%
Primary FCBN (NPL): 4x2.5%
Secondary Voltage: 208Y/120
Secondary Connection: Wye-N
Secondary BIL: 10kV
Material: Aluminum
Vector Configuration: Dyn1 (-30°)
Temperature Rise: 150°C
Insulation Class: 220°C
Seismic Compliance: OSHPD, IBC 2018 (Sds=2.0, z/h=1, Ip=1.5)
Sound Level: 45 dBA (NEMA ST-20)
Impedance (Std): 2.5% - 6.5%
Efficiency Regulation: DOE 2016 (US), NRCAN 2019 (Canada), NMX 2021 (Mexico)
Approval: CSA, UL
Primary Termination (NPL): Mechanical Lugs
Secondary Termination (NPL): Mechanical Lugs
Enclosure Type: Type 3R / IP24
Enclosure Finish: ANSI 61 Grey, UL50
Enclosure PN (NPL): DH2-N3R
Enclosure Dimensions: 28.75in/731mm(H), 25.75in/655mm(W), 23.8in/605mm(D)
Net Weight: 290 lb / 132 kg
Nameplate: Standard

Current Stock: 638 In Stock (as of 12/17/2024)
Typical Lead Time: 25-40 Working Days
*Note: Subject to prior sale and large orders subject to HPS approval.

Product Configuration (EQv2-Lite): https://engprd01.hammondpowersolutions.com/EQv2-Lite/SG3A0030KB
Engineering Drawing (PDF): https://engprd01.hammondpowersolutions.com/info/en/pn/SG3A0030KB

Installation (suite)

PROCÉDURES DE VÉRIFICATION

Avant de quitter l'installation, observer un cycle complet de fonctionnement pour s'assurer que tous les composants fonctionnent correctement. Vérifier le bon fonctionnement dans la séquence suivante :

1. Lorsque les thermostats sont connectés au système de réfrigération, ventilation ou refroidissement : Tourner le bouton dans le sens horaire à un réglage supérieur à celui de la température ambiante. Le système de ventilation ou de refroidissement doit être désactivé. Lorsque le bouton est tourné dans le sens antihoraire (un réglage de température inférieure), le ventilateur ou le système de refroidissement doit s'activer aux environs du réglage du bouton.
2. Lorsque les thermostats sont connectés à un dispositif ou à un système de chauffage : Tourner le bouton dans le sens horaire au-dessus de la température ambiante, l'appareil de chauffage doit s'allumer. Lorsque le bouton est tourné dans le sens antihoraire (à un réglage de température inférieure), l'appareil de chauffage doit s'arrêter aux environs du réglage du bouton.
3. Thermostat à commutateur SPDT/ SPDT à deux étages : Si la connexion ressemble à celle de la Figure 7, le ventilateur doit démarrer vers la température ambiante et passer à la haute vitesse lorsque le bouton est tourné dans le sens antihoraire à un réglage de température inférieure. Si le câblage ressemble à celui de la Figure 8, le registre doit s'ouvrir alors que le bouton est tourné dans le sens antihoraire (à un réglage de température inférieure). Les dispositifs doivent s'activer dans la séquence inverse lorsque le bouton est tourné dans le sens horaire.

Ce produit est configuré à l'usine pour un réglage d'échelle de température maximum. Le réglage de température maximum peut-être abaissé en enlevant le couvercle, en desserrant légèrement la vis de réglage adjacente au bouton de réglage, et en déplaçant la vis de réglage le long de la fente jusqu'à la température maximale désirée. Resserrer ensuite la vis de réglage et remettre le couvercle en place.

Fonctionnement

La Figure 11, page 3 illustre le fonctionnement des thermostats à commutateur SPDT/SPDT à deux étages. Lorsque la température est augmentée à partir du réglage du bouton, le circuit entre R et Y du contacteur bas étage (RYL) se referme. Au même moment, le circuit entre R et B (RBL) s'ouvre.

Suite à une plus grande augmentation de température, le contacteur de l'étage supérieur fonctionne et se ferme (RYH) tout en ouvrant simultanément (RBH). La séquence inverse a lieu lors d'une baisse de température.

REMARQUE : Aucune pièce de rechange disponible. Ne pas tenter de réparer sur place.

GARANTIE LIMITÉE

GARANTIE LIMITÉE DE UN AN DE DAYTON. *LES MODÈLES THERMOSTATS DE TENSION DE LIGNE DE DAYTON® COUVERTS DANS CE MANUEL SONT GARANTIS À L'UTILISATEUR D'ORIGINE PAR DAYTON ELECTRIC MFG. CO. (DAYTON), CONTRE TOUT DÉFAUT DE FABRICATION OU DE MATÉRIAUX, LORS D'UNE UTILISATION NORMALE, ET CELA PENDANT UN AN APRÈS LA DATE D'ACHAT. TOUTE PIÈCE, DONT LES MATÉRIAUX OU LA MAIN D'OUVRE SERONT JUGÉS DÉFECTUEUX, ET QUI SERA RENVOYÉE PORT PAYÉ, À UN CENTRE DE RÉPARATION AUTORISÉ PAR DAYTON, SERA, À TITRE DE SOLUTION EXCLUSIVE, SOIT RÉPARÉE, SOIT REMPLACÉE PAR DAYTON. POUR LE PROCÉDÉ DE RÉCLAMATION SOUS GARANTIE LIMITÉ, REPORTEZ-VOUS À LA CLAUSE DE "DISPOSITION PROMPTE" CI-DESSOUS. CETTE GARANTIE LIMITÉE DONNE AUX ACHETEURS DES DROITS LÉGAUX SPÉCIFIQUES QUI VARIENT DE JURIDICTION À JURIDICTION.*

LIMITES DE RESPONSABILITÉ. *LA RESPONSABILITÉ DE DAYTON, DANS LES LIMITES PERMISES PAR LA LOI, POUR LES DOMMAGES INDIRECTS OU FORTUITS EST EXPRESSEMENT DÉNIÉE. DANS TOUS LES CAS LA RESPONSABILITÉ DE DAYTON EST LIMITÉE ET NE DÉPASSERA PAS LA VALEUR DU PRIX D'ACHAT PAYÉ.*

DÉSISTEMENT DE GARANTIE. *DE DILIGENTS EFFORTS SONT FAITS POUR FOURNIR AVEC PRÉCISION LES INFORMATIONS ET ILLUSTRATIONS DES PRODUITS DÉCRITS DANS CETTE BROCHURE; CEPENDANT, DE TELLES INFORMATIONS ET ILLUSTRATIONS SONT POUR LA SEULE RAISON D'IDENTIFICATION, ET N'EXPRIMENT NI N'IMPLIQUENT QUE LES PRODUITS SONT COMMERCIALISABLES, OU ADAPTABLES À UN BESOIN PARTICULIER, NI QUE CES PRODUITS SONT NÉCESSAIREMENT CONFORMES AUX ILLUSTRATIONS OU DESCRIPTIONS. SAUF POUR CE QUI SUIT, AUCUNE GARANTIE OU AFFIRMATION DE FAIT, ÉNONCÉE OU IMPLICITE, AUTRE QUE CE QUI EST ÉNONCÉ DANS LA « GARANTIE LIMITÉE » CI-DESSUS N'EST FAITE OU AUTORISÉE PAR DAYTON.*

Désistement sur les conseils techniques et les recommandations. *Peu importe les pratiques ou négociations antérieures ou les usages commerciaux, les ventes n'incluent pas l'offre de conseils techniques ou d'assistance ou encore de conception de système. Dayton n'a aucune obligation ou responsabilité quant aux recommandations non autorisées, aux opinions et aux suggestions relatives au choix, à l'installation ou à l'utilisation des produits.*

Conformité du produit. *De nombreuses juridictions ont des codes et règlements qui gouvernent les ventes, constructions, installations et/ou utilisations de produits pour certains usages qui peuvent varier par rapport à ceux d'une zone voisine. Bien que Dayton essaie de s'assurer que ses produits s'accordent avec ces codes, Dayton ne peut garantir cet accord, et ne peut être jugée responsable pour la façon dont le produit est installé ou utilisé. Avant l'achat et l'usage d'un produit, revoir les applications de ce produit, ainsi que tous les codes et règlements nationaux et locaux applicables, et s'assurer que le produit, son installation et son usage sont en accord avec eux.*

Certains aspects de désistement ne sont pas applicables aux produits pour consommateur; ex : (a) certaines juridictions ne permettent pas l'exclusion ou la limitation des dommages indirects ou fortuits et donc la limitation ou exclusion ci-dessus peut ne pas s'appliquer dans le cas présent; (b) également, certaines juridictions n'autorisent pas de limitations de durée de la garantie implicite, en conséquence, la limitation ci-dessus peut ne pas s'appliquer dans le cas présent; et (c) par force de loi, pendant la période de cette Garantie Limitée, toutes garanties impliquées de commerciabilité ou d'adaptabilité à un besoin particulier applicables aux produits de consommateurs achetés par des consommateurs, peuvent ne pas être exclues ni autrement désistées.

Disposition prompte. *Un effort de bonne foi sera fait pour corriger ou ajuster rapidement tout produit prouvé défectueux pendant la période de la garantie limitée. Pour tout produit considéré défectueux pendant la période de garantie limitée, contacter tout d'abord le concessionnaire où l'appareil a été acheté. Le concessionnaire doit donner des instructions supplémentaires. S'il est impossible de résoudre le problème de façon satisfaisante, écrire à Dayton à l'adresse ci-dessous, en indiquant le nom et l'adresse du concessionnaire, la date et le numéro de la facture du concessionnaire, et en décrivant la nature du défaut. Le titre et le risque de perte passent à l'acheteur au moment de la livraison par le transporteur. Si le produit a été endommagé pendant le transport, une réclamation doit être faite auprès du transporteur.*

Fabriqué pour Dayton Electric Mfg. Co., 5959 W. Howard St., Niles, Illinois 60714-4014 États-Unis

Tableau de dépannage

Symptôme	Cause(s) possible(s)	Action corrective
Refroidissement :		
Le ventilateur ou le refroidissement ne fonctionne pas	1. Câblage incorrect 2. Bouton réglé au-dessus de la température ambiante	1. Vérifier le câblage 2. Régler le bouton à une température inférieure
Le refroidissement ou le ventilateur fonctionne continuellement	1. Câblage incorrect 2. Bouton réglé au-dessous de la température ambiante	1. Vérifier le câblage 2. Régler le bouton à une température supérieure
Le système fonctionne à l'inverse	Câblage incorrect	Vérifier le câblage
Chauffage :		
L'appareil de chauffage ne fonctionne pas	1. Câblage incorrect 2. Bouton réglé au-dessous de la température ambiante	1. Vérifier le câblage 2. Régler le bouton à une température supérieure
L'appareil de chauffage fonctionne continuellement	1. Câblage incorrect 2. Bouton réglé au-dessus de la température ambiante	1. Vérifier le câblage 2. Régler le bouton à une température inférieure
Le système fonctionne à l'inverse	Câblage incorrect	Vérifier le câblage

Operating Instructions — **1UHH1 thru 1UHH4, 2NNR5 thru 2NNR9, 2NNT1 thru 2NNT5, 6EDY3 thru 6EDY5 and 6EDY7**

Please read and save these instructions. Read carefully before attempting to assemble, install, operate or maintain the product described. Protect yourself and others by observing all safety information. Failure to comply with instructions could result in personal injury and/or property damage! Retain instructions for future reference.

Dayton® Line Voltage Thermostats

Description

These Line Voltage Thermostats are designed for reliable use in heating, ventilating, and refrigeration applications. A broad temperature range between -30° and +120°F (-34° and +49°C) allows for a wide range of heating, ventilating, and refrigeration applications. Snap-acting contacts are in a dust protected enclosure. SPDT switches are enclosed and protected.

Specifications

ELECTRICAL RATINGS

AC Voltage	120 V	208 V	240 V	277 V
Models 1UHH1 thru 1UHH4, 2NNR5 thru 2NNR7, 2NNR9, 2NNT1 thru 2NNT5, 6EDY3 thru 6EDY5 and 6EDY7:				
Inductive Full Load Amps	16.0	9.2	8.0	–
Locked Rotor Amps	96.0	55.2	48.0	–
Models 2NNR8 & 2NNT5:				
Inductive Full Load Amps	12.0	–	–	–
Locked Rotor Amps	72.0	–	–	–
Resistive Load Amps (not lamp loads):				
Models 1UHH1, 1UHH2, 2NNR6, 2NNR7, 2NNR9 & 2NNT3:				
SPST (when connected)	22.0	22.0	22.0	22.0
SPDT (when connected)	16.0	9.2	8.0	7.2
Models 1UHH3, 2NNT1 & 6EDY4:				
SPDT Rating	16.0	9.2	8.0	7.2
Models 1UHH4, 2NNR5 & 2NNT4:				
SPST Rating	22.0	22.0	22.0	22.0
Models 2NNR8 & 2NNT5*:				
SPST Rating	15.0	–	–	–

Pilot Duty . . . . . 125 VA 24/600 VAC

(*) Model numbers 2NNR8 and 2NNT5 include a 6 foot "Piggyback" cord.

NOTE: When used as a two circuit switch, the total load must not exceed 2000 VA.

Figure 1

General Safety Information

⚠ WARNING ***Disconnect all power before installing or servicing this product. If the power disconnect is out of view, lock it in the open position and tag it to prevent unexpected restarting of power. Failure to do so could result in fatal electric shock.***

1. Special attention must be given to any grounding information on this product and to other equipment associated with its installation and use. To ensure a proper ground, the grounding means must be checked by a qualified electrician.
2. Be certain that the electrical ratings of the thermostat conform to the power source and the load(s) being controlled. Loads that exceed the rating of the thermostat should be handled with a suitable rated relay or motor starter.

⚠ WARNING ***Do not depend upon the thermostat as the sole means of disconnecting power when installing or servicing the product it is controlling. Always disconnect power at the main circuit breaker as described above. Failure to do so could result in fatal electric shock.***

3. This thermostat is intended ONLY for permanent installation in accordance with the United States National Electrical Code (NEC), all applicable local codes and ordinances, and all sections of this manual. All wiring should be done by a qualified electrician, using copper wire only.

⚠ WARNING ***These thermostats are intended for general heating, ventilating, and refrigeration ONLY. They must NOT be used in potentially dangerous locations such as flammable, explosive, chemical laden areas or in wet atmospheres.***

⚠ WARNING ***These thermostats are designed for use as operating controls only. Where an operating control failure would result in personal injury and/or loss of property, it is the responsibility of the installer to add devices (safety, limit controls) or systems (supervisory alarm systems) that protect against, or warn of control failure.***

ADDITIONAL SPECIFICATIONS

Model Number	Application	Switch	Temperature Range	Temperature Differential*	Sensor	Construction	Housing Rating
1UHH1	Heat/Cool	SPDT	30 to 110°F (-1 to 43°C)	3.5°F	Fixed	Polymeric	4X
1UHH2	Heat/Cool	SPDT	30 to 110°F (-1 to 43°C)	3.5°F	Fixed	Steel	1
1UHH3	2 Stage Heat/Cool	SPDT/SPDT	30 to 110°F (-1 to 43°C)	3.5°F	Fixed	Steel	1
1UHH4	Cool Only	SPST	30 to 110°F (-1 to 43°C)	3.5°F	Fixed	Steel	1
2NNR5	Refrigeration	SPST	-30 to 90°F (-34 to 32°C)	3.5°F	Extended	Steel	1
2NNR6	Heat/Cool	SPDT	0 to 120°F (-18 to 49°C)	3.5°F	Extended	Polymeric	4X
2NNR7	Heat/Cool	SPDT	-30 to 90°F (-34 to 32°C)	3.5°F	Extended	Steel	1
2NNR8	Heat Only	SPST	35 to 95°F (2 to 35°C)	3.5°F	Fixed	Steel	1
2NNR9	Heat/Cool	SPDT	30 to 110°F (-1 to 43°C)	3.5°F	Fixed	Stainless Steel	1
2NNT1	2 Stage Heat/Cool	SPDT/SPDT	30 to 110°F (-1 to 43°C)	3.5°F	Fixed	Stainless Steel	1
2NNT2	Cool Only	SPST	30 to 110°F (-1 to 43°C)	3.5°F	Fixed	Stainless Steel	1
2NNT3	Heat/Cool	SPDT	-30 to 90°F (-34 to 32°C)	3.5°F	Extended	Stainless Steel	1
2NNT4	Refrigeration	SPST	-30 to 90°F (-34 to 32°C)	3.5°F	Extended	Stainless Steel	1
2NNT5	Heat Only	SPST	35 to 95°F (2 to 35°C)	3.5°F	Fixed	Stainless Steel	1
6EDY3	Heat/Cool	SPDT	30 to 110°F (-1 to 43°C)	3.5 to 12°F	Fixed	Polymeric	4X
6EDY4	2 Stage Heat/Cool	SPDT/SPDT	30 to 110°F (-1 to 43°C)	3.5°F	Fixed	Polymeric	4X
6EDY5	Heat/Cool	SPDT	30 to 110°F (-1 to 43°C)	3.5°F	Fixed	Polymeric	4X
6EDY7	Heat/Cool	SPDT	-30 to 90°F (-34 to 32°C)	3.5 to 12°F	Extended	Steel	1

(*) Temperature between stages on Models 1UHH3, 2NNT1 and 6EDY4 is fixed. The low stage makes contacts R (Red) to Y (Yellow) at the knob setting while the high stage makes contact approximately 3°F above the knob setting.

General Safety Information (Continued)

⚠ WARNING ***In cases where personal injury or property damage may result from malfunction of the thermostat, a backup system must be used. Where critical or high value products are maintained, an approved temperature limit should be wired in series with this thermostat. In less critical applications, a second thermostat with alarm contacts may be used for redundancy.***

Installation

LOCATION

Mount this product 5 to 6 feet above the floor so it will be exposed to the average temperature of the controlled space. Do not mount control where it could be affected by unusual heat or cold such as in sunlight or beside equipment. Avoid locations near a door, window or other opening. Do not mount on an outside wall. When the thermostat is mounted with coil pointed down, it is protected from falling objects, dirt, and debris.

MOUNTING – FIXED INSTALLATIONS

Four mounting holes for fixed installations are found in the back of the case. On rough surfaces use the top mounting holes only. When mounting this control on uneven surfaces, when all four mounting screws are tightened, the housing may deform enough to affect the thermostat calibration and operation.

⚠ CAUTION ***Do not dent or deform the sensor coil of this control. A dent or deformation will change the calibration and cause the control to cycle at a temperature lower than the knob setting.***

NOTE: Dimensions and performance specifications appearing below (Figures 2 and 2A) are nominal and are subject to accepted manufacturing tolerances and application variables.

MOUNTING – PORTABLE HEATER THERMOSTATS (2NNR8 & 2NNT5)

Thermostat model numbers 2NNR8 and 2NNT5 are designed to be used with portable heaters. They are supplied with a 6 foot (1.8 m) HSJ class cord and a "series" plug for 120 volt 12 amp service. The thermostat case is connected to the green "ground" wire.

⚠ CAUTION ***To reduce the risk of electric shock, this product has a grounding type plug that has a third (grounding) pin. This plug will only fit into a grounding type power outlet. If the plug does not fit into the outlet, contact a qualified electrician to install the proper outlet. Do not change the plug in any way.***

To install this device, unfold the bail wire on the back of the thermostat and hang the unit where it can be plugged into a 3-prong (grounded) power supply. Then plug the heater into the "piggyback" portion of the thermostat plug.

For best results, be sure the thermostat is suitably mounted above the floor and away from the heater discharge. If an extension cord is required, use only 3-wire grounded extension cords with adequate wire size.

⚠ WARNING ***Do not allow the thermostat to be placed on the floor where it could come in contact with moisture, or be stepped on. Doing so could result in a fatal electric shock.***

MOUNTING – RAINTIGHT THERMOSTAT INSTALLATION (2NNR6, 6EDY3, 6EDY4 & 6EDY5)

Thermostat models 2NNR6, 6EDY3, 6EDY4 and 6EDY5 are designed for use in wet or humid environments. They meet NEMA 4X requirements when used with approved watertight connectors (not included).

To ensure water tightness, a UL listed cord seal or conduit hub marked "4X" should be tightened onto the conduit before installing in the enclosure. A drip loop must be used to prevent moisture from entering the thermostat housing. Make certain that all connectors are securely tightened.

When reinstalling the cover, make sure it is squarely positioned over the gasket. Then uniformly tighten the screws, evenly compressing the gasket to provide a watertight seal. Do not overtighten.

MOUNTING – EXTENDABLE BULB THERMOSTAT INSTALLATION (2NNR5, 2NNR6, 2NNR7, 2NNT3, 2NNT4 & 6EDY7)

Thermostat models 2NNR5, 2NNR6, 2NNR7, 2NNT3, 2NNT4 and 6EDY7 have a sensor bulb attached to the end of an extendable capillary tube. The sensor bulb on these units is designed to monitor temperature remotely from the control module.

When extending the sensor, avoid bending or kinking the extendable capillary tube, as this will affect the accuracy of the unit. Make sure that any excess tubing is coiled beneath the thermostat control module.

The control module should be located in a convenient place within a distance easily reached by the thermostats' extendable sensing bulb.

Care should be taken to install the sensing bulb where it will sense the average ambient temperature of the area to be controlled.

For **remote room installations**, mount the sensing bulb in a location where the ambient air can easily circulate around the sensing bulb. For **cold room installations**, the sensing bulb may also be mounted on the suction side of a refrigerant line, and secured in position.

For **duct installations**, position the sensing bulb where it is in the primary air stream and avoid mounting the sensing bulb close to hot pipes, cooling coils, or other areas which may cause an inaccurate reading.

For **tank installations**, the sensing bulb can be inserted directly into the tank fluid. Place the sensing bulb in a location where the liquid will circulate around the sensing bulb and where it is not affected by extraneous temperatures. When mounting in a tank:

- First drain the system.
- Then screw an approved boiler plug into a pipe tapping (not supplied).
- Position a packing nut on the capillary tubing of the sensing bulb.
- Slip the sensing bulb completely through the boiler plug.
- Put the composition disc and slotted brass washers on the capillary tubing.
- Slide the assembly into the boiler plug and tighten the packing nut.
- Refill the system and check for leaks.
- Coil the excess capillary tubing, taking care to avoid any crimps.

ADJUSTABLE TEMPERATURE DIFFERENTIAL MODELS

For models 6EDY3 and 6EDY7 you may adjust the difference between the on and off temperature by moving the tab to "MIN" for a 3 degree difference or up to "MAX" for a 12 degree difference (see Figure 3).

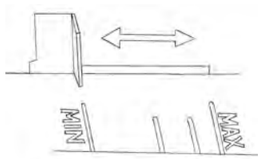

Figure 3 – Adjustable Differential Models

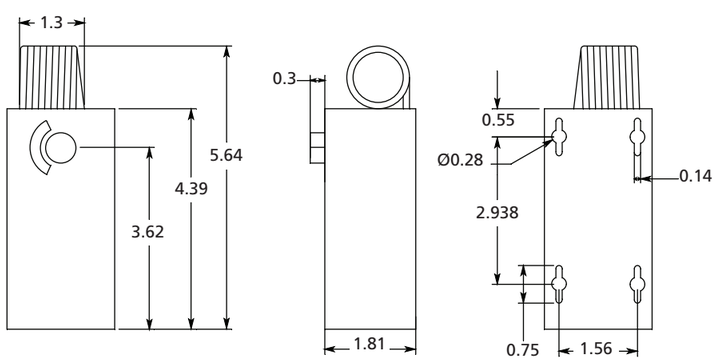

Figure 2 – Dimensions of Metal Cased Thermostat (in inches)

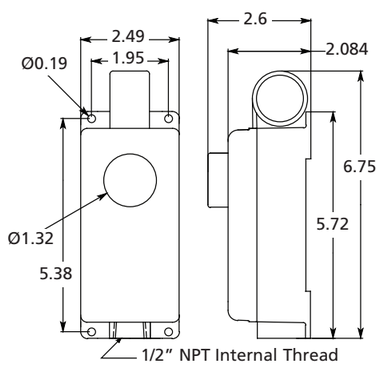

Figure 2A – Plastic Cased Thermostat

Installation (suite)

CÂBLAGE

IMPORTANT : Tout le câblage doit être effectué conformément aux codes, ordonnances et règlements applicables. Utiliser un dispositif de coupure et de protection contre la surcharge pour assurer une installation sécuritaire et conforme à tous les codes locaux et nationaux. Les Figures 4, 5 et 6 illustrent un câblage typique pour la commande du chauffage, du refroidissement, de la réfrigération et de systèmes de commande combinés chauffage/ refroidissement (conducteurs en cuivre seulement).

REMARQUE : Les lettres **R**, **B** et **Y** (rouge, bleu et jaune) renvoient aux points de couleur à côté des bornes (voir les Figures 4 à 11).

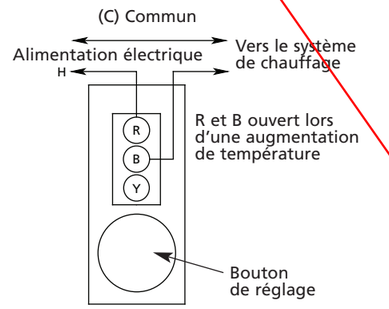

Figure 4 – Connexion d'un circuit de commande de chauffage typique

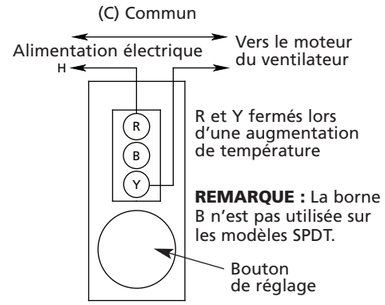

Figure 5 – Connexion pour un circuit de commande de réfrigération, ventilation ou refroidissement typique

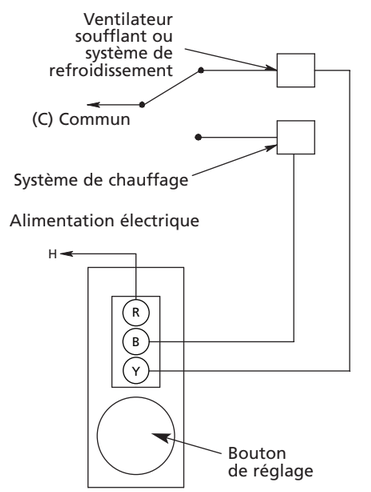

REMARQUE : Commutateur SPDT non inclus.

Figure 6 – Thermostats SPDT dans les systèmes de commande de chauffage et de ventilation

La Figure 7 indique le câblage de commande d'un ventilateur à deux vitesses. Lorsque l'élément de commande atteint les réglages du bouton, le contacteur de basse température démarre le ventilateur à basse vitesse. Si la température ambiante continue d'augmenter, le contacteur de haute température alimente l'enroulement de moteur haute vitesse et déconnecte l'enroulement basse vitesse.

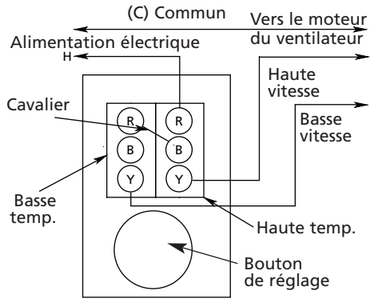

Figure 7 – Thermostats SPDT/SPDT à deux étages de commande d'un ventilateur à deux vitesses

La Figure 8 illustre un raccordement SPDT/SPDT typique pour une application de ventilateur à deux volumes. Le moteur de registre sera activé lorsque la température atteint le réglage du bouton. Si la température continue d'augmenter, le moteur du ventilateur sera activé par le contacteur haute température.

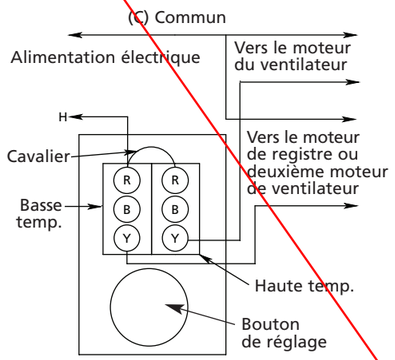

Figure 8 – Thermostats SPDT/SPDT à deux étages contrôlant un ventilateur à vitesse unique et un moteur de registre à augmentation de volume

Les appareils SPDT/SPDT peuvent également être utilisés pour commander un dispositif combiné de chauffage et ventilation, ou un système de refroidissement, comme l'illustre la Figure 9. Une température supérieure au réglage du bouton arrête le système de chauffage lorsque les contacts R-B de basse température sont coupés. Une augmentation de température d'environ 2 °C (3 °F) active le ventilateur ou le système de refroidissement par l'intermédiaire des contacts R-Y du contacteur haute température.

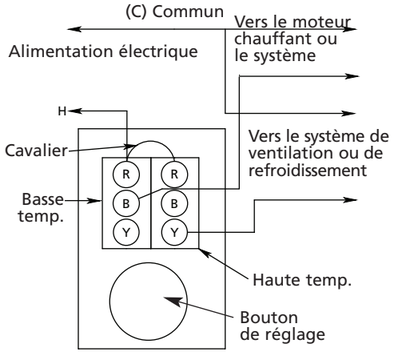

Figure 9 – Thermostats SPDT/SPDT avec transfert automatique entre les modes de commande des systèmes de chauffage et de refroidissement

La Figure 10 illustre un câblage typique pour les appareils SPDT/SPDT permettant de commander deux étages de chauffage. Alors que la température ambiante baisse par rapport au réglage des boutons, le contacteur haute température établit un contact R-B qui active le premier étage de chauffage. Si la température continue à baisser (environ 2 °C / 3 °F), le contacteur basse température établit un contact R-B qui active le deuxième étage de chauffage.

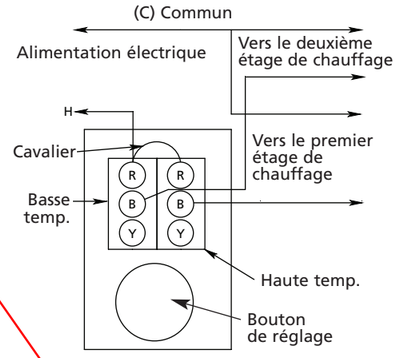

Figure 10 – Thermostats SPDT/SPDT contrôlant un système de chauffage à deux étages

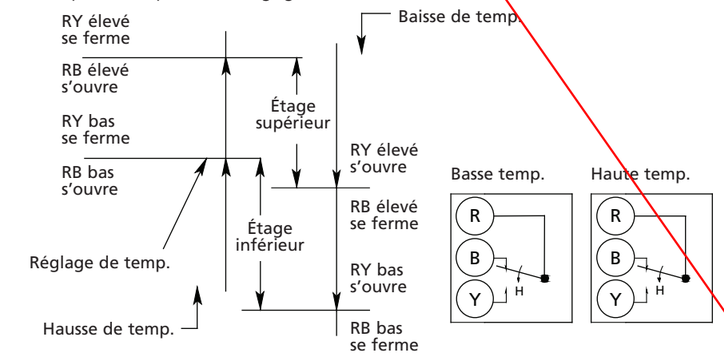

Figure 11 – Séquence de fonctionnement des thermostats SPDT/SPDT à deux étages

Informations générales sur la sécurité (suite)

⚠ AVERTISSEMENT ***Dans les cas où des blessures ou des dommages matériels pourraient survenir suite à un mauvais fonctionnement du thermostat, un système de secours doit être utilisé. Lorsque des produits essentiels ou de grande valeur sont conservés, un dispositif de limite de température approuvé doit être câblé en série avec le thermostat. Dans les cas d'applications moins critiques, un deuxième thermostat muni d'un contact d'alarme peut être utilisé pour fins de redondance.***

Installation

EMPLACEMENT

Installer ce produit à 1,5-1,8 m au-dessus du plancher pour qu'il soit exposé à la température moyenne de l'espace contrôlé. Ne pas installer la commande dans un endroit où elle pourrait être affectée par de la chaleur ou du froid inhabituel, comme en plein soleil ou à côté d'autres équipements. Éviter les emplacements à proximité d'une porte, d'une fenêtre ou d'autres ouvertures. Ne pas installer sur un mur extérieur. Lorsque le thermostat est installé avec son serpentin pointant vers le bas, il est protégé contre la chute d'objets, la saleté et les débris.

MONTAGE – INSTALLATIONS FIXES

Quatre trous de montage pour les installations fixes sont situés à l'arrière du boîtier. Si les surfaces sont rugueuses, utiliser seulement les trous de montage supérieurs. Lorsque cette commande est installée sur des surfaces inégales, après avoir bien serré les quatre vis de montage, le boîtier pourrait être suffisamment déformé pour modifier l'étalonnage et le fonctionnement du thermostat.

⚠ ATTENTION ***Ne pas faire d'encoche ou déformer le serpentin capteur de cette commande. Une encoche ou une déformation modifie l'étalonnage et génère un cycle à une température inférieure à celle indiquée par le bouton de réglage.***

REMARQUE : Les dimensions et la spécification de performance indiquées ci-dessous (Figures 2 et 2A) sont nominales et sujettes aux tolérances de fabrication acceptées et aux variables de l'application.

MONTAGE – THERMOSTATS POUR RADIATEURS PORTABLES (2NNR8 ET 2NNT5)

Les thermostats numéros de modèle 2NNR8 et 2NNT5 sont conçus pour être utilisés avec des radiateurs portables. Ils sont livrés avec un cordon de classe HSJ de 1,8 m (6 pi) et une fiche « série » pour une alimentation de 120 V 12 A. Le boîtier du thermostat est connecté au fil de « terre » vert.

⚠ ATTENTION ***Afin de réduire les risques de décharges électriques, ce produit est doté d'une fiche de mise à la terre munie d'une troisième broche (de mise à la terre). Cette fiche s'insère uniquement dans une prise d'alimentation de type mise à la terre. Si la fiche ne peut être insérée dans la prise, contacter un électricien qualifié pour qu'il installe la prise qui convient. Ne modifier la fiche en aucune manière.***

Pour installer ce dispositif, déplier le fil d'accrochage situé à l'arrière du thermostat et suspendre l'appareil dans un endroit où il peut être branché sur une prise électrique à 3 broches (mise à la terre). Brancher ensuite le radiateur dans la partie « à califourchon » de la fiche du thermostat.

Pour obtenir de meilleurs résultats, vérifier que le thermostat est bien installé au-dessus du plancher, loin de la sortie d'air chaud du radiateur. Si un cordon prolongateur s'avère nécessaire, il doit être composé de 3 fils avec mise à la terre, et du calibre qui convient.

⚠ AVERTISSEMENT ***Ne pas installer le thermostat sur le plancher, où il pourrait entrer en contact avec de l'humidité ou encore être écrasé. Ceci pourrait entraîner une décharge électrique mortelle.***

MONTAGE – INSTALLATION D'UN THERMOSTAT ÉTANCHE À L'EAU (2NNR6, 6EDY3, 6EDY4 ET 6EDY5)

Les thermostats de modèle 2NNR6, 6EDY3, 6EDY4 et 6EDY5 sont conçus pour être utilisés dans des environnements mouillés ou humides. Ils sont conformes aux normes NEMA 4X lorsqu'ils sont utilisés avec des connecteurs étanches approuvés (non fournis).

Afin d'assurer l'étanchéité, un manchon d'étanchéité ou un manchon de conduit homologué UL marqué « 4X » doit être inséré sur le conduit avant l'installation dans l'enveloppe. Une boucle d'égouttement doit être utilisée pour empêcher l'humidité de pénétrer dans le boîtier du thermostat. Vérifier que tous les connecteurs sont serrés de façon sécuritaire.

Lors de l'installation du couvercle, s'assurer qu'il est placé bien à égalité par-dessus le joint d'étanchéité. Serrer les vis uniformément, de manière à comprimer le joint et garantir l'étanchéité. Ne pas trop serrer.

MONTAGE – INSTALLATION DE THERMOSTATS À BULLE THERMOSTATIQUE (2NNR5, 2NNR6, 2NNR7, 2NNT3, 2NNT4 ET 6EDY7)

Les modèles de thermostats 2NNR5, 2NNR6, 2NNR7, 2NNT3, 2NNT4 et 6EDY7 sont dotés d'un capteur à bulle fixé à l'extrémité d'un tube capillaire extensible. Le capteur à bulle de ces appareils est conçu pour surveiller à distance la température à partir du module de contrôle.

Lorsque le capteur est déployé, éviter de plier ou de déformer le tube capillaire pour ne pas nuire à la précision de l'appareil. S'assurer que tout tubage excédentaire est enroulé en dessous du module de contrôle du thermostat.

Le module de contrôle doit être situé dans un endroit pratique à une distance facilement accessible pour la bulle thermostatique extensive du thermostat.

S'assurer d'installer la bulle thermostatique dans un endroit où elle pourra capter la température ambiante moyenne de la zone contrôlée.

Installation dans une pièce éloignée : Installer la bulle thermostatique dans un endroit où l'air ambiant peut facilement circuler autour de celle-ci. **Installation en chambre froide :** La bulle thermostatique peut également être montée sur le côté aspiration d'une ligne de liquides réfrigérants et fixée solidement en position.

Installation sur gaine : Placer la bulle thermostatique dans le courant d'air principal en évitant de l'installer à proximité de tuyaux chauds, de serpentins de refroidissement ou d'autres endroits susceptibles de produire une lecture erronée.

Installation dans un réservoir : La bulle thermostatique peut être insérée directement dans le liquide du réservoir. Placer la bulle thermostatique de manière à ce que le liquide circule autour de celle-ci sans qu'elle soit affectée par des températures exogènes. Lors d'une installation dans un réservoir :

- Purger d'abord le système.
- Visser ensuite un bouchon pour chaudière approuvé dans un taraudage pour tuyau (non fourni).
- Placer un écrou de presse-garniture sur le tubage capillaire de la bulle thermostatique.
- Insérer complètement la bulle thermostatique à travers le bouchon pour chaudière.
- Installer un disque de clapet et des rondelles fendues en cuivre sur le tubage capillaire.
- Faire glisser l'ensemble dans le bouchon pour chaudière et serrer l'écrou de presse-garniture.
- Remplir le système et vérifier qu'il n'y a pas de fuite.
- Enrouler le tubage capillaire supplémentaire en prenant soin d'éviter des pincements.

MODÈLES À DIFFÉRENTIEL DE TEMPÉRATURE RÉGLABLE

Pour les modèles 6EDY3 et 6EDY7, vous pouvez régler la différence entre la température de marche et d'arrêt en déplaçant l'onglet sur "MIN" pour une différence de 3 degrés ou jusqu'à "MAX" pour une différence de 12 degrés (voir Figure 3).

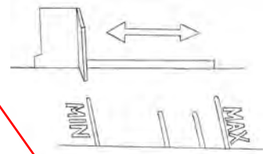

Figure 3 – Modèles à différentiel réglable

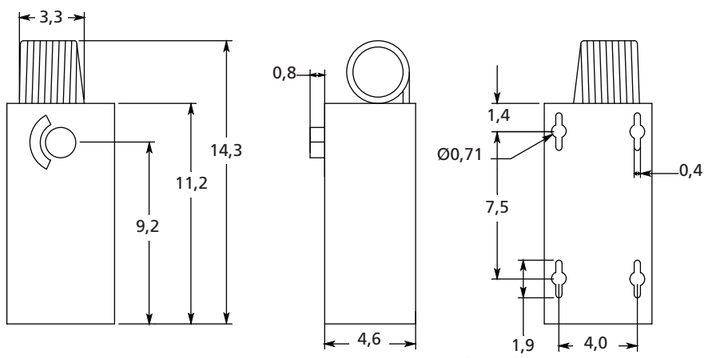

Figure 2 – Dimensions du thermostat avec boîtier en métal (en cm)

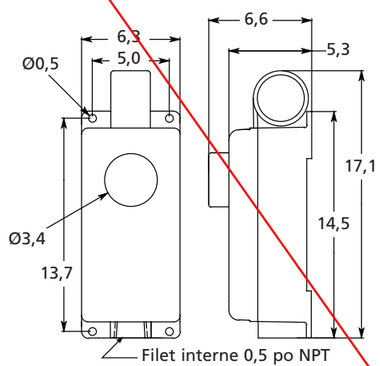

Figure 2A – Thermostat avec boîtier en plastique

Installation (Continued)

WIRING

IMPORTANT: All wiring should be done in accordance with applicable codes, ordinances and regulations. Use disconnect device and overload protection to assure safe installation complying with local and national codes. Figures 4, 5 and 6 illustrate typical wiring for control of heating, cooling, refrigeration, and combination heating/cooling control systems (copper conductors only).

NOTE: Letters **R**, **B** and **Y** (red, blue and yellow) refer to color of paint dots near terminals (see Figures 4-11).

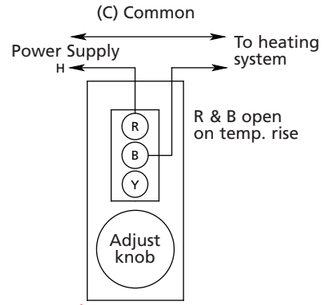

Figure 4 – Connection for a Typical Heating Control Circuit

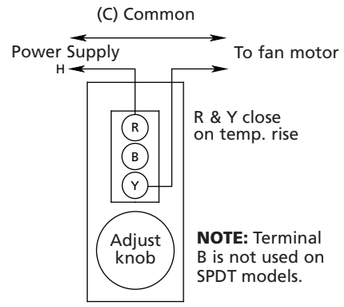

Figure 5 – Connection for a Typical Refrigeration, Ventilation or Cooling Control Circuit

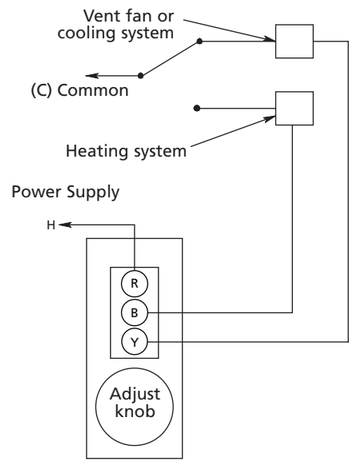

NOTE: SPDT switch not included.

Figure 6 – SPDT Thermostats in Control of Heating and Ventilation Systems

Figure 7 shows wiring for controlling a two-speed ventilating fan. When the control element reaches the knob settings, the low temperature switch starts the fan on low speed. If the ambient temperature continues to rise, the high temperature switch supplies power to the high-speed motor winding while disconnecting the low-speed winding.

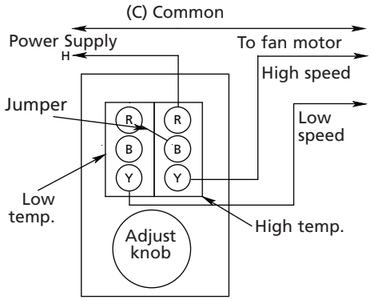

Figure 7 – Two-stage SPDT/SPDT Thermostats in Control of a Two-speed Ventilating Fan

Figure 8 shows a typical SPDT/SPDT hook-up for a two-volume fan application. The damper motor will be energized when the temperature reaches the knob setting. If the temperature continues to rise, the fan motor will be energized by the high temperature switch.

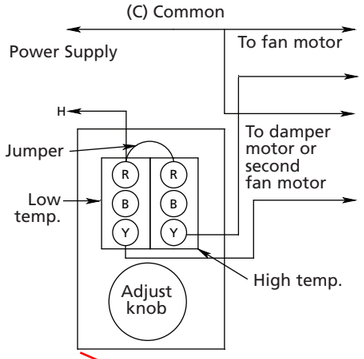

Figure 8 – Two-stage SPDT/SPDT Thermostats in Control of a Single-speed Ventilating Fan and Volume Increase Damper Motor

SPDT/SPDT units can also be used to control a combination heating and ventilating or cooling system, as shown in Figure 9. A temperature increase to the knob setting will turn off the heating system when the R-B contacts of the low temperature switch break. An increase in temperature of about 3°F will turn on the fan or cooling system through the R-Y contacts of the high temperature switch.

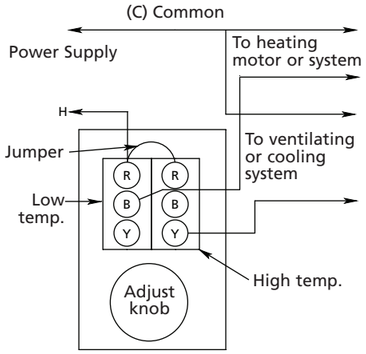

Figure 9 – Two-stage SPDT/SPDT Thermostats with Automatic Changeover in Control of Heating and Cooling Systems

Figure 10 illustrates typical wiring for SPDT/SPDT units for control of two heating stages. As the ambient temperature decreases to the knob setting, the high temperature switch will make R-B contact, turning on the first stage of heating. If the temperature continues to drop (about 3°F) the low temperature switch will make R-B contact, turning on the second stage of heating.

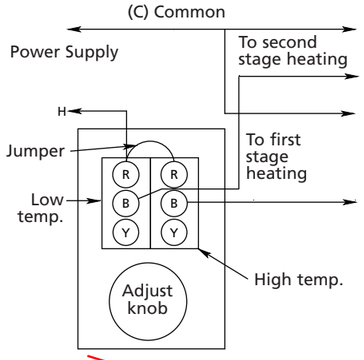

Figure 10 – Two-stage SPDT/SPDT Thermostats in Control of a Two-stage Heating System

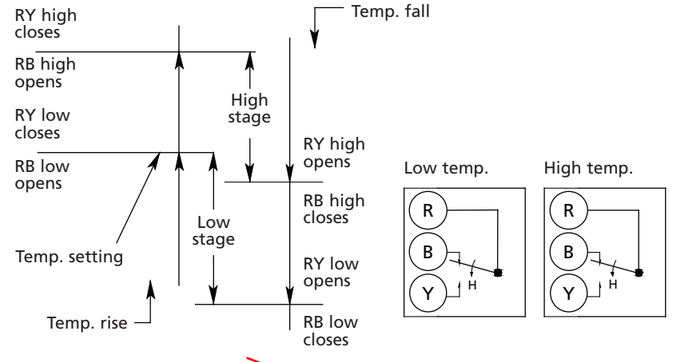

Figure 11 – Operational Sequence of Two-stage SPDT/SPDT Thermostats

Dayton

Installation (Continued)

CHECKOUT PROCEDURE

Before leaving the installation, a complete operating cycle should be observed to ensure that all components are functioning properly. Check for correct operation in the following sequence:

1. When thermostats are connected to Refrigeration, Ventilating, or Cooling Systems: Turn knob clockwise to a setting above ambient temperature. Fan or Cooling System should be off. When knob is turned counterclockwise (to lower temperature setting), the fan or cooling system should turn on approximately at the knob setting.
2. When thermostats are connected to a Heating device or system: Turn knob clockwise above the ambient temperature; the heating unit should be on. When knob is turned counterclockwise (to lower temperature setting), the heating unit should turn off approximately at the knob setting.
3. Thermostats with SPDT/SPDT 2 Stage switching: If connection is similar to Figure 7, fan should start at approximately ambient temperature and should change to high speed, as the knob is turned counterclockwise to a lower temperature setting. If wiring is similar to Figure 8, the damper should open as the knob is turned counterclockwise (to lower temperature setting). The devices should act in reverse sequence when the knob is turned clockwise.

This product is set at the factory for the maximum temperature scale setting. The maximum temperature setting can be reduced by removing the cover, slightly loosening the adjusting screw adjacent to the adjust knob, and moving the adjusting screw along the slot to the desired maximum temperture. Once this is done, retighten the adjusting screw and replace the cover.

Operation

Figure 11, page 3 illustrates the operation of thermostats with SPDT/SPDT 2 Stage switching. On a temperature increase to the knob setting, the circuit between R and Y of the low stage switch (RYL) closes. Simultaneously the circuit between R and B (RBL) opens.

On a further increase in temperature the high stage switch operates and closes (RYH) while simultaneously opening (RBH). The reverse sequencing takes place with a decrease in temperature.

NOTE: No Replacement parts available. Do not attempt any field repair.

LIMITED WARRANTY

DAYTON ONE-YEAR LIMITED WARRANTY. *DAYTON® LINE VOLTAGE THERMOSTATS, MODELS COVERED IN THIS MANUAL, ARE WARRANTED BY DAYTON ELECTRIC MFG. CO. (DAYTON) TO THE ORIGINAL USER AGAINST DEFECTS IN WORKMANSHIP OR MATERIALS UNDER NORMAL USE FOR ONE YEAR AFTER DATE OF PURCHASE. ANY PART WHICH IS DETERMINED TO BE DEFECTIVE IN MATERIAL OR WORKMANSHIP AND RETURNED TO AN AUTHORIZED SERVICE LOCATION, AS DAYTON DESIGNATES, SHIPPING COSTS PREPAID, WILL BE, AS THE EXCLUSIVE REMEDY, REPAIRED OR REPLACED AT DAYTON'S OPTION. FOR LIMITED WARRANTY CLAIM PROCEDURES, SEE "PROMPT DISPOSITION" BELOW. THIS LIMITED WARRANTY GIVES PURCHASERS SPECIFIC LEGAL RIGHTS WHICH VARY FROM JURISDICTION TO JURISDICTION.*

LIMITATION OF LIABILITY. *TO THE EXTENT ALLOWABLE UNDER APPLICABLE LAW, DAYTON'S LIABILITY FOR CONSEQUENTIAL AND INCIDENTAL DAMAGES IS EXPRESSLY DISCLAIMED. DAYTON'S LIABILITY IN ALL EVENTS IS LIMITED TO AND SHALL NOT EXCEED THE PURCHASE PRICE PAID.*

WARRANTY DISCLAIMER. *A DILIGENT EFFORT HAS BEEN MADE TO PROVIDE PRODUCT INFORMATION AND ILLUSTRATE THE PRODUCTS IN THIS LITERATURE ACCURATELY; HOWEVER, SUCH INFORMATION AND ILLUSTRATIONS ARE FOR THE SOLE PURPOSE OF IDENTIFICATION, AND DO NOT EXPRESS OR IMPLY A WARRANTY THAT THE PRODUCTS ARE MERCHANTABLE, OR FIT FOR A PARTICULAR PURPOSE, OR THAT THE PRODUCTS WILL NECESSARILY CONFORM TO THE ILLUSTRATIONS OR DESCRIPTIONS. EXCEPT AS PROVIDED BELOW, NO WARRANTY OR AFFIRMATION OF FACT, EXPRESSED OR IMPLIED, OTHER THAN AS STATED IN THE "LIMITED WARRANTY" ABOVE IS MADE OR AUTHORIZED BY DAYTON.*

Technical Advice and Recommendations, Disclaimer. *Notwithstanding any past practice or dealings or trade custom, sales shall not include the furnishing of technical advice or assistance or system design. Dayton assumes no obligations or liability on account of any unauthorized recommendations, opinions or advice as to the choice, installation or use of products.*

Product Suitability. *Many jurisdictions have codes and regulations governing sales, construction, installation, and/or use of products for certain purposes, which may vary from those in neighboring areas. While attempts are made to assure that Dayton products comply with such codes, Dayton cannot guarantee compliance, and cannot be responsible for how the product is installed or used. Before purchase and use of a product, review the product applications, and all applicable national and local codes and regulations, and be sure that the product, installation, and use will comply with them.*

Certain aspects of disclaimers are not applicable to consumer products; e.g., (a) some jurisdictions do not allow the exclusion or limitation of incidental or consequential damages, so the above limitation or exclusion may not apply to you; (b) also, some jurisdictions do not allow a limitation on how long an implied warranty lasts, consequently the above limitation may not apply to you; and (c) by law, during the period of this Limited Warranty, any implied warranties of implied merchantability or fitness for a particular purpose applicable to consumer products purchased by consumers, may not be excluded or otherwise disclaimed.

Prompt Disposition. *A good faith effort will be made for prompt correction or other adjustment with respect to any product which proves to be defective within limited warranty. For any product believed to be defective within limited warranty, first write or call dealer from whom the product was purchased. Dealer will give additional directions. If unable to resolve satisfactorily, write to Dayton at address below, giving dealer's name, address, date, and number of dealer's invoice, and describing the nature of the defect. Title and risk of loss pass to buyer on delivery to common carrier. If product was damaged in transit to you, file claim with carrier.*

Manufactured for Dayton Electric Mfg. Co., 5959 W. Howard St., Niles, Illinois 60714-4014 U.S.A.

Troubleshooting Chart

Symptom	Possible Cause(s)	Corrective Action
Cooling:		
Cooling or fan does not operate	1. Improper wiring 2. Knob set above ambient temperature	1. Check wiring 2. Set knob to lower temperature
Cooling or fan runs continuously	1. Improper wiring 2. Knob set below ambient temperature	1. Check wiring 2. Set knob to higher temperature
System operates in reverse	Improper wiring	Check wiring
Heating:		
Heating unit does not operate	1. Improper wiring 2. Knob set below ambient temperature	1. Check wiring 2. Set knob to higher temperature
Heating unit runs continuously	1. Improper wiring 2. Knob set above ambient temperature	1. Check wiring 2. Set knob to lower temperature
System operates in reverse	Improper wiring	Check wiring

Manuel d'utilisation — **1UHH1 à 1UHH4, 2NNR5 à 2NNR9, 2NNT1 à 2NNT5, 6EDY3 à 6EDY5 et 6EDY7**

Veuillez lire et conserver ces instructions. Lire attentivement avant de commencer à assembler, installer, faire fonctionner ou entretenir l'appareil décrit. Protégez-vous et les autres en observant toutes les informations sur la sécurité. Négliger d'appliquer ces instructions peut résulter en des blessures corporelles et/ou en des dommages matériels ! Conserver ces instructions pour références ultérieures.

Thermostats de tension de ligne de Dayton®

Description

Ces thermostats de tension de ligne sont conçus pour une utilisation fiable dans des applications de chauffage, de ventilation et de réfrigération. Une vaste plage de températures (-34 et 49 °C / -30 et 120 °F) permet une grande variété d'applications de chauffage, de ventilation et de réfrigération. Les contacts à action brusque sont logés dans une enveloppe protégée contre la poussière. Les commutateurs SPDT (unipolaires bidirectionnels) sont enfermés et protégés.

Spécifications

CARACTÉRISTIQUES NOMINALES ÉLECTRIQUES

Tension c.a.	120 V	208 V	240 V	277 V
Modèles 1UHH1 à 1UHH4, 2NNR5 à 2NNR7, 2NNR9, 2NNT1 à 2NNT5, 6EDY3 à 6EDY5 et 6EDY7 :				
Intensité inductive à pleine charge	16,0	9,2	8,0	–
Intensité à rotor bloqué	96,0	55,2	48,0	–
Modèles 2NNR8 et 2NNT5 :				
Intensité inductive à pleine charge	12,0	–	–	–
Intensité à rotor bloqué	72,0	–	–	–
Intensité de charge résistive (pas des charges de lampe) :				
Modèles 1UHH1, 1UHH2, 2NNR6, 2NNR7, 2NNR9 et 2NNT3 :				
SPST (lorsque connecté)	22,0	22,0	22,0	22,0
SPDT (lorsque connecté)	16,0	9,2	8,0	7,2
Modèles 1UHH3, 2NNT1 et 6EDY4 :				
Valeur nominale SPDT	16,0	9,2	8,0	7,2
Modèles 1UHH4, 2NNR5 et 2NNT4 :				
Valeur nominale SPST	22,0	22,0	22,0	22,0
Modèles 2NNR8 et 2NNT5* :				
Valeur nominale SPST	15,0	–	–	–
Régime de fonctionnement asservi	125 VA 24/600 V c.a.			

Figure 1

(*) Les numéros de modèles 2NNR8 et 2NNT5 incluent un cordon superposé de 1,8 m.
REMARQUE : Lorsqu'utilisé en tant que commutateur à deux circuits, la charge totale ne doit pas dépasser 2000 VA.

SPÉCIFICATIONS SUPPLÉMENTAIRES

Numéro de Modèle	Application	Interrupteur	Plage de temp.	Différentiel de temp.*	Capteur	Matériau	Classe de boîtier
1UHH1	Chauffage/Réfr.	SPDT	-1 à 43 °C (30 à 110 °F)	2,0 °C (3,5 °F)	Fixe	Polymérique	4X
1UHH2	Chauffage/Réfr.	SPDT	-1 à 43 °C (30 à 110 °F)	2,0 °C (3,5 °F)	Fixe	Acier	1
1UHH3	Chauf/Réfr. à 2 étages	SPDT/SPDT	-1 à 43 °C (30 à 110 °F)	2,0 °C (3,5 °F)	Fixe	Acier	1
1UHH4	Réfr. seulement	SPST	-1 à 43 °C (30 à 110 °F)	2,0 °C (3,5 °F)	Fixe	Acier	1
2NNR5	Réfrigération	SPST	-34 à 32 °C (-30 à 90 °F)	2,0 °C (3,5 °F)	Étendu	Acier	1
2NNR6	Chauffage/Réfr.	SPDT	-18 à 49 °C (0 à 120 °F)	2,0 °C (3,5 °F)	Étendu	Polymérique	4X
2NNR7	Chauffage/Réfr.	SPDT	-34 à 32 °C (-30 à 90 °F)	2,0 °C (3,5 °F)	Étendu	Acier	1
2NNR8	Chauffage seulement	SPST	2 à 35 °C (35 à 95 °F)	2,0 °C (3,5 °F)	Fixe	Acier	1
2NNR9	Chauffage/Réfr.	SPDT	-1 à 43 °C (30 à 110 °F)	2,0 °C (3,5 °F)	Fixe	Acier inoxydable	1
2NNT1	Chauf/Réfr. à 2 étages	SPDT/SPDT	-1 à 43 °C (30 à 110 °F)	2,0 °C (3,5 °F)	Fixe	Acier inoxydable	1
2NNT2	Réfr. seulement	SPST	-1 à 43 °C (30 à 110 °F)	2,0 °C (3,5 °F)	Fixe	Acier inoxydable	1
2NNT3	Chauffage/Réfr.	SPDT	-34 à 32 °C (-30 à 90 °F)	2,0 °C (3,5 °F)	Étendu	Acier inoxydable	1
2NNT4	Réfrigération	SPST	-34 à 32 °C (-30 à 90 °F)	2,0 °C (3,5 °F)	Étendu	Acier inoxydable	1
2NNT5	Chauffage seulement	SPST	2 à 35 °C (35 à 95 °F)	2,0 °C (3,5 °F)	Fixe	Acier inoxydable	1
6EDY3	Chauffage/Réfr.	SPDT	-1 à 43 °C (30 à 110 °F)	2,0 à 6,7°C (3,5 à 12°F)	Fixe	Polymérique	4X
6EDY4	Chauf/Réfr. à 2 étages	SPDT/SPDT	-1 à 43 °C (30 à 110 °F)	2,0 °C (3,5 °F)	Fixe	Polymérique	4X
6EDY5	Chauffage/Réfr.	SPDT	-1 à 43 °C (30 à 110 °F)	2,0 °C (3,5 °F)	Fixe	Polymérique	4X
6EDY7	Chauffage/Réfr.	SPDT	-34 à 32 °C (-30 à 90 °F)	2,0 à 6,7°C (3,5 à 12°F)	Étendu	Acier	1

(*) La température entre les étages pour les modèles 1UHH3, 2NNT1 et 6EDY4 est fixe. L'étage inférieur établit un contact entre R (Rouge) et Y (Jaune) au réglage du bouton, alors que l'étage élevé établit un contact environ 1,8 °C (3 °F) au-dessus du réglage du bouton.

Informations générales sur la sécurité

⚠ AVERTISSEMENT ***Couper toute alimentation électrique avant d'installer ou de réparer ce produit. Si le sectionneur est hors de la vue, le verrouiller en position ouverte et l'étiqueter afin d'éviter une remise en marche intempestive. Négliger de suivre cette directive pourrait entraîner une décharge électrique mortelle.***

1. Une attention particulière doit être accordée à toute information de mise à la terre de ce produit et de tout autre équipement associé à son installation et à son utilisation. Afin d'assurer une mise à la masse adéquate, les moyens de mise à la masse doivent être vérifiés par un électricien qualifié.
2. Vérifier que les caractéristiques électriques nominales du thermostat sont conformes à la source d'alimentation électrique et à la charge contrôlée. Une charge qui dépasse les caractéristiques électriques nominales du thermostat doit être gérée avec un relais ou un démarreur de moteur qui convient.

⚠ AVERTISSEMENT ***Ne pas dépendre uniquement du thermostat pour couper l'alimentation électrique lors de l'installation ou de la réparation du produit qu'il contrôle. Toujours couper l'alimentation au niveau du disjoncteur principal, comme il est décrit ci-dessus. Négliger de suivre cette directive pourrait entraîner une décharge électrique mortelle.***

3. Ce thermostat est conçu UNIQUEMENT pour une installation permanente, en conformité avec le Code national de l'électricité des États-Unis (CNE), et avec les codes et ordonnances locales, de même qu'avec toutes les sections de ce manuel. Tout le câblage doit être installé par un électricien qualifié, en utilisant uniquement des fils en cuivre.

⚠ AVERTISSEMENT ***Ces thermostats sont conçus pour un chauffage, une ventilation et une réfrigération générale SEULEMENT. Ils ne doivent PAS être utilisés dans des endroits potentiellement dangereux, comme des zones qui contiennent des produits inflammables, explosifs ou chimiques, ou encore dans des atmosphères humides.***

⚠ AVERTISSEMENT ***Ces thermostats sont conçus pour être utilisés seulement comme des commandes de fonctionnement. Dans les cas où la défaillance d'une commande de fonctionnement risque d'entraîner des blessures et/ou des dommages matériels, il incombe à l'installateur d'ajouter des dispositifs (sécurité, contrôle de limite) ou des systèmes (système d'alarme de surveillance) qui protègent, ou avertissent, lors d'une défaillance d'une commande.***

Operating Instructions & Parts Manual

EN

Dayton®

Utility Shutter-Mounted Exhaust Fans

Models: 484X36, 484X37, 484X38, 484X39, 484X40, 484X41, 484X42, 484X43, 484X44, 484X46, 484X47, 484X48, 484X49, 484X50

Dayton®

PLEASE READ AND SAVE THESE INSTRUCTIONS. READ CAREFULLY BEFORE ATTEMPTING TO ASSEMBLE, INSTALL, OPERATE OR MAINTAIN THE PRODUCT DESCRIBED.

PROTECT YOURSELF AND OTHERS BY OBSERVING ALL SAFETY INFORMATION. FAILURE TO COMPLY WITH INSTRUCTIONS COULD RESULT IN PERSONAL INJURY AND/OR PROPERTY DAMAGE! RETAIN INSTRUCTIONS FOR FUTURE REFERENCE.

PLEASE REFER TO BACK COVER FOR INFORMATION REGARDING DAYTON'S WARRANTY AND OTHER IMPORTANT INFORMATION.

Model #: _____

Serial #: _____

Purch. Date: _____

Form HV001SF/ Printed in USA
20003351 Version 01 01/2019
© 2019 Dayton Electric Manufacturing Co.
All Rights Reserved

GETTING STARTED

Tools/Materials Needed:

- Saw to cut rough opening
- Appropriate fasteners to attach to wall
- Screwdriver or wrench to attach fasteners
- Sealant or caulk

Contents:

- Shutter Style Exhaust Fan (1)
- Operating Instructions and Parts Manual (1)

Inspection:

After unpacking your exhaust fan, carefully inspect for any damage that may have occurred during transit. Inspect for loose, missing or damaged parts. If there is physical damage to any parts of the fan, a freight claim must be filed with the carrier. Check to ensure that all bolts, screws and set screws are securely tightened that may have come loose during transit. Retighten as required. Rotate fan propeller by hand to be sure it turns freely.

GENERAL SAFETY INSTRUCTIONS

⚠ DANGER *Before installing or servicing, always lock out and tag power source. Do not rely on a switch as the only means of disconnecting power. Failure to disconnect power source can result in fire, electrical shock or serious injury. Motor will restart without warning after thermal protector trips. Do not touch an operating motor as it may be hot enough to cause injury. Do not place any body parts or objects in fan propeller while fan is connected to a power source.*

⚠ WARNING Read and follow all instructions, cautions, dangers and warnings. Failure to do so could result in personal injury, death or property damage.

Make sure the electrical power source conforms to the requirements of the fan(s) as well as local codes.

Electrical connections, installation and maintenance must be performed by qualified electrical personnel in accordance with all applicable codes and ordinances. Refer to Fig. 1 of this manual.

Unit must be adequately grounded.

To reduce the risk of fire or electrical shock, do not expose this fan to water.

Do not touch electrically live components.

Free rotation of the fan propeller is critical. It must not touch any part of the guard or shutter.

Ensure that all power cords do not come in contact with any sharp edges, hot surfaces or chemicals. Immediately replace any damaged cords.

These utility exhaust fans are for general purpose exhaust applications only. Do not use these exhaust fans in explosive or corrosive atmospheres.

⚠ CAUTION *In the United States to reduce the risk of injury to persons, OSHA requires OSHA compliant guards when fan is installed within 7ft of the floor or working level. In Canada, to reduce the risk of injury to persons, CSA complying guards are required when fan is installed below 2.5 m (8.2ft) above floor or grade level.*

Dayton®

Recommended Accessories:
Speed Control(48C172) for 484X36, 484X37, 484X38, 484X39, 484X40, 484X43, 484X46.
2 Speed Fan Switch(1DGZ9) for 484X48.

SPECIFICATIONS

Power Requirements:	115v/60hz
Mounting Orientation:	Vertical, wall
Shutter Blades & Frame Material:	Aluminum
Propeller Material:	Aluminum, Galvanized Steel
Certifications:	UL/cUL 705

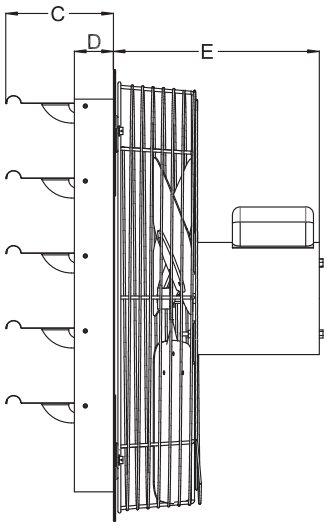

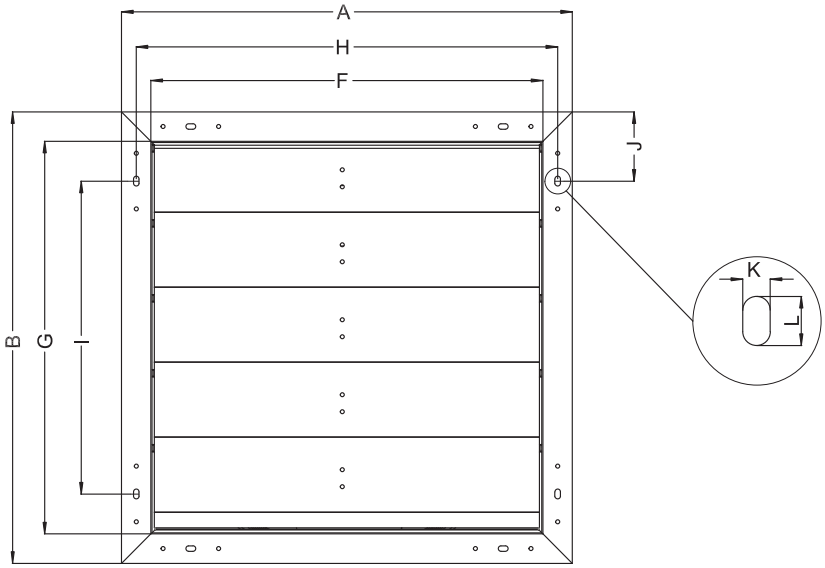

Dimension (In.)														
Model	Prop Dia.	A	B	C	D	E	F	G	H	I	J	K	L	Suggested Wall Opening (Sq)
484X36	7”	11"	11"	5 3/4"	2"	6"	8 1/8"	8 1/8"	9 5/8"	4 1/16"	3 1/2"	5/16"	1/2"	8 1/2"
484X37	10”	13"	13"	5 3/4"	2"	6"	10 1/8"	10 1/8"	11 5/8"	6"	3 1/2"	5/16"	1/2"	10 1/2"
484X38	12”	15"	15"	5 3/4"	2"	6"	12 1/8"	12 1/8"	13 5/8"	8"	3 1/2"	5/16"	1/2"	13"
484X39	16”	19"	19"	5 3/4"	2"	6"	16 1/8"	16 1/8"	17 3/4"	11 7/8"	3 1/2"	5/16"	1/2"	17"
484X40	18”	21"	21"	5 3/4"	2"	6"	18 1/8"	18 1/8"	19 3/4"	14"	3 1/2"	5/16"	1/2"	19"
484X41	18”	21"	21"	5 3/4"	2"	6"	18 1/8"	18 1/8"	19 3/4"	14"	3 1/2"	5/16"	1/2"	19"
484X42	20”	23"	23"	5 3/4"	2"	11"	20 1/8"	20 1/8"	21 3/4"	16"	3 1/2"	5/16"	1/2"	21"
484X43	20”	23"	23"	5 3/4"	2"	11"	20 1/8"	20 1/8"	21 3/4"	16"	3 1/2"	5/16"	1/2"	21"
484X44	20”	23"	23"	5 3/4"	2"	11"	20 1/8"	20 1/8"	21 3/4"	16"	3 1/2"	5/16"	1/2"	21"
484X46	24”	27"	27"	5 3/4"	2"	12"	24 1/8"	24 1/8"	25 5/8"	20"	3 1/2"	5/16"	1/2"	25"
484X47	24”	27"	27"	5 3/4"	2"	12"	24 1/8"	24 1/8"	25 5/8"	20"	3 1/2"	5/16"	1/2"	25"
484X48	24”	27"	27"	5 3/4"	2"	12"	24 1/8"	24 1/8"	25 5/8"	20"	3 1/2"	5/16"	1/2"	25"
484X49	30”	33"	33"	5 3/4"	2"	13"	30 1/8"	30 1/8"	31 5/8"	26"	3 1/2"	5/16"	1/2"	31"
484X50	36”	39"	39"	5 3/4"	2"	13"	36 1/4"	36 1/4"	37 5/8"	32"	3 1/2"	5/16"	1/2"	37"

PERFORMANCE

Model	Prop Dia.	Spd	Nom. HP	Amps	Nom. RPM	Bearing Type	Sones @ 0.00 SP	CFM @ 0.00 SP	CFM @ 0.125 SP	CFM @ 0.25 SP	Recommended Speed Control
484X36	7”	Var.	1/25	0.5	1550	Ball	5.37	254	197	NA	48C172
484X37	10”	Var.	1/25	0.6	1550	Ball	6.19	625	420	NA	48C172
484X38	12”	Var.	1/15	0.6	1550	Ball	6.00	884	401	NA	48C172
484X39	16”	Var.	1/10	0.9	1550	Ball	6.39	1381	770	NA	48C172
484X40	18”	Var.	1/8	1.0	1075	Ball	7.40	1785	605	NA	48C172
484X41	18”	1	1/4	3.0	1550	Ball	7.28	3128	2567	2201	N/A
484X42	20”	1	1/4	2.6	1550	Ball	7.01	3223	2508	2072	N/A
484X43	20”	Var.	1/4	3.0	1075	Ball	11.30	3151	2335	1099	48C172
484X44	20”	1	1/3	4.5	1600	Ball	8.10	4034	3334	2924	N/A
484X46	24”	Var.	1/4	3.0	1075	Ball	7.00	4163	3009	1097	48C172
484X47	24”	1	1/3	3.2	1075	Ball	7.42	4479	3428	1894	N/A
484X48	24”	2	1/3	3.2	1075/945	Ball	7.42/6.92	4424/3746	3385/2069	1886/0	1DGZ9
484X49	30”	1	1/3	3.8	825	Ball	7.01	5893	4288	2374	N/A
484X50	36”	1	1/2	5.7	825	Ball	8.24	8860	6828	3140	N/A

Note: Performance may vary slightly due to customer installation and operating conditions.

INSTALLATION INSTRUCTIONS

1. Cut hole in wall, frame according to the suggested wall opening shown in dimensional chart for the appropriate size shutter fan or as required. Each installation may vary. Check and verify your specific requirements prior to cutting rough-in hole.
2. Ensure the unit is securely mounted in a rigid framework and sits flat against the wall to avoid unwanted noise or premature failure of components. Louvers should open towards the outside of the room you are exhausting air from.
3. Consult a qualified electrician to properly wire the exhaust fan (as well as additional controls or switches) according to the manufacturer’s provided wiring diagram on the motor and control/switch.
4. Install compatible controls/switches according to wire diagrams provided by the manufacturer. Ensure your model shutter exhaust fan is compatible with the control you have chosen.
5. Connect power to the motor using approved wiring method shown below. Refer to Fig.1.

Fig.1: Wiring Schematics

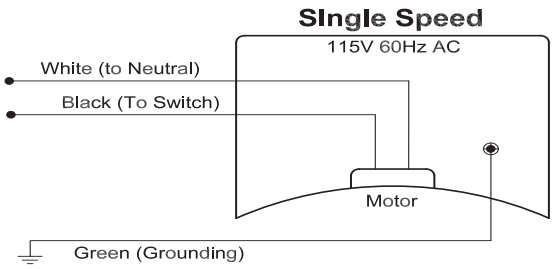

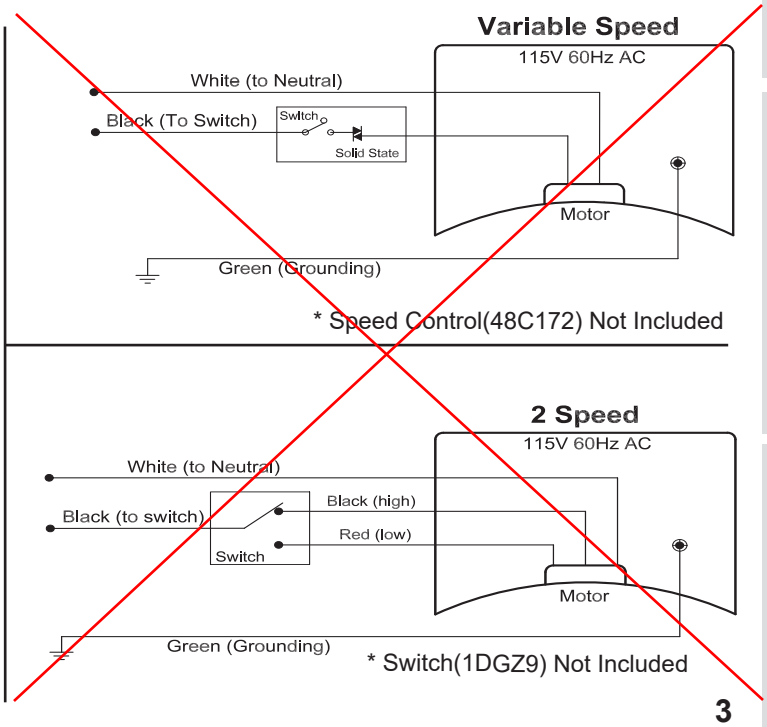

NFBUP, NFBUP-S, NFXUP, NFXUP-S

On/Off, Spring Return, 24 to 240 VAC

Torque min. 90 in-lb, for control of air dampers

Application

For On/Off, fail-safe control of dampers in HVAC systems. Actuator sizing should be done in accordance with the damper manufacturer's specifications. Control is On/Off from an auxiliary contact, or a manual switch.

The actuator is mounted directly to a damper shaft up to 1.05" in diameter by means of its universal clamp. A crank arm and several mounting brackets are available for applications where the actuator cannot be direct coupled to the damper shaft.

Operation

The NFB and NFX series actuators provide true spring return operation for reliable fail-safe application and positive close off on air tight dampers. The spring return system provides constant torque to the damper with, and without, power applied to the actuator.

The NFB and NFX series provides 95° of rotation and is provided with a graduated position indicator showing 0° to 95°.

The actuator may be stalled anywhere in its normal rotation without the need of mechanical end switches.

The NFBUP-S and NFXUP-S versions are provided with two built-in auxiliary switches. These SPDT switches provide safety interfacing or signaling, for example, for fan start-up. The switching function at the fail-safe position is fixed at +10°, the other switch function is adjustable between +10° to +90°. The NFBUP, NFBUP-S, NFXUP and NFXUP-S actuator is shipped at +5° (5° from full fail-safe) to provide automatic compression against damper gaskets for tight shut-off.

Technical Data	NFBUP, NFBUP-S, NFXUP, NFXUP-S
Power supply	24...240 VAC -20% / +10%, 50/60 Hz 24...125 VDC ±10%
Power consumption running	6 W
holding	2.5 W
Transformer sizing	6 VA @ 24 VAC (class 2 power source) 6.5 VA @ 120 VAC 9.5 VA @ 240 VAC
Electrical connection NFBUP...	3 ft, 18 GA appliance cable, 1/2" conduit connector **-S models:** Two 3 ft, 18 gauge appliance cables with 1/2" conduit connectors
NFXUP...	3 ft [1m], 10 ft [3m] or 16 ft [5m] 18 GA appliance cable, with or without 1/2" conduit connector **-S models:** two 3 ft [1m], 10 ft [3m] or 16 ft [5m] appliance cables with or without 1/2" conduit connectors
Overload protection	electronic throughout 0 to 95° rotation
Control	on/off
Torque	90 in-lb [10 Nm] minimum
Direction of rotation spring	reversible with CW/CCW mounting
Mechanical angle of rotation	95° (adjustable with mechanical end stop, 35° to 95°)
Running time motor	< 75 seconds
spring	20 seconds @ -4°F to 122°F [-20°C to 50°C]; < 60 seconds @ -22°F [-30°C]
Position indication	visual indicator, 0° to 95° (0° is full spring return position)
Manual override	5 mm hex crank (3/16" Allen), supplied
Humidity	max. 95% RH non-condensing
Ambient temperature	-22°F to 122°F [-30°C to 50°C]
Storage temperature	-40°F to 176°F [-40°C to 80°C]
Housing	Nema 2, IP54, Enclosure Type2
Housing material	zinc coated metal and plastic casing
Agency listings †	cULus acc. to UL60730-1A/-2-14, CAN/CSA E60730-1:02, CE acc. to 2004/108/EC & 2006/95/EC
Noise level	<50dB(A) motor @ 75 seconds ≤62dB(A) spring return
Servicing	maintenance free
Quality standard	ISO 9001
Weight	4.15 lbs (1.9 kg), 4.4 lbs (2.0 kg) with switches

† Rated Impulse Voltage 4kV, Type of action 1.AA (1.AA.B for -S version), Control Pollution Degree 3.

NFBUP-S, NFXUP-S	
Auxiliary switches	2 x SPDT 3A (0.5A) @ 250 VAC, UL approved one set at +10°, one adjustable 10° to 90°

Dimensions (Inches [mm])

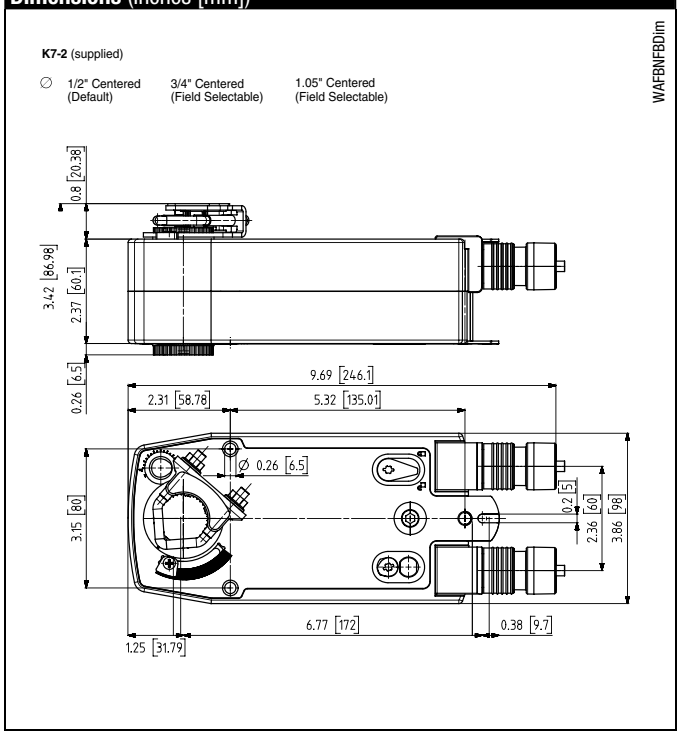

M40024 - 05/10 - Subject to change. © Belimo Aircontrols (USA), Inc.

Accessories

AV 8-25	Shaft extension
IND-AFB	Damper position indicator
K7-2	Universal clamp for up to 1.05” dia jackshafts
KH-AFB	Crank arm
TF-CC US	Conduit fitting
Tool-06	8mm and 10 mm wrench
ZG-100	Universal mounting bracket
ZG-101	Universal mounting bracket
ZG-118	Mounting bracket for Barber Colman® MA 3../4.., Honeywell® Mod III or IV or Johnson® Series 100 replacement or new crank arm type installations
ZG-AFB	Crank arm adaptor kit
ZG-AFB118	Crank arm adaptor kit
ZS-100	Weather shield (metal)
ZS-150	Weather shield (polycarbonate)
ZS-260	Explosion-proof housing
ZS-300	NEMA 4X housing

Note: When using NFBUP, NFBUP-S, NFXUP, NFXUP-S actuators, only use accessories listed on this page.

For actuator wiring information and diagrams, refer to Belimo Wiring Guide.

Typical Specification

On/Off spring return damper actuators shall be direct coupled type which require no crank arm and linkage and be capable of direct mounting to a jackshaft up to a 1.05” diameter. The actuators must be designed so that they may be used for either clockwise or counterclockwise fail-safe operation. Actuators shall be protected from overload at all angles of rotation. If required, two SPDT auxiliary switch shall be provided having the capability of one being adjustable. Actuators with auxiliary switches must be constructed to meet the requirements for Double Insulation so an electrical ground is not required to meet agency listings. Actuators shall be cULus Approved and have a 5 year warranty, and be manufactured under ISO 9001 International Quality Control Standards. Actuators shall be as manufactured by Belimo.

Wiring Diagrams

INSTALLATION NOTES

1. Provide overload protection and disconnect as required.
2. ***CAUTION** Equipment Damage!*
   Actuators may be connected in parallel.
   Power consumption and input impedance must be observed.
3. No ground connection is required.
4. For end position indication, interlock control, fan startup, etc., NFBUP-S and NFXUP-S incorporates two built-in auxiliary switches: 2 x SPDT, 3A (0.5A) @250 VAC, UL Approved, one switch is fixed at +10°, one is adjustable 10° to 90°.

APPLICATION NOTES

- Meets cULus requirements without the need of an electrical ground connection.

***WARNING** Live Electrical Components!*
During installation, testing, servicing and troubleshooting of this product, it may be necessary to work with live electrical components. Have a qualified licensed electrician or other individual who has been properly trained in handling live electrical components perform these tasks. Failure to follow all electrical safety precautions when exposed to live electrical components could result in death or serious injury.

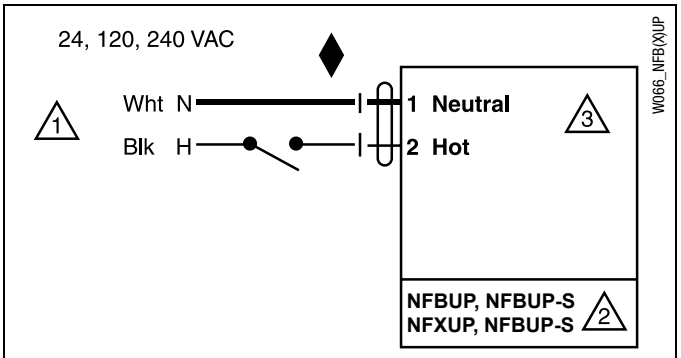

On/Off wiring for NFBUP, NFXUP

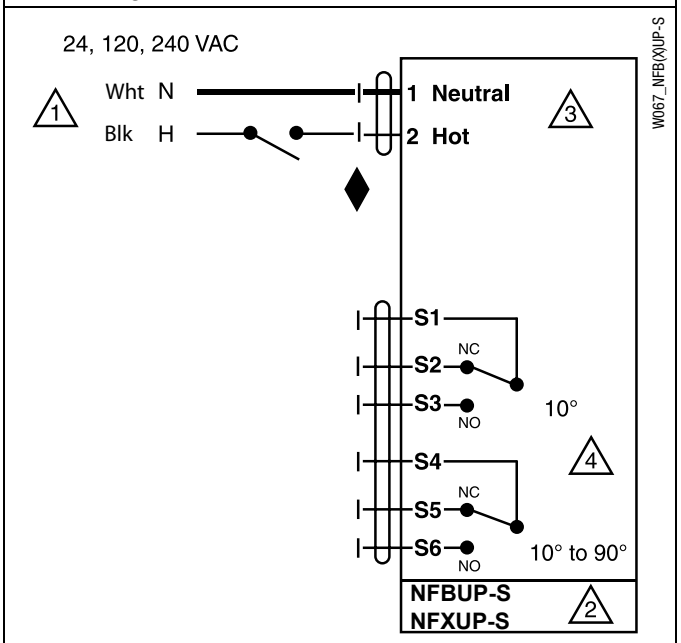

Auxiliary Switches for NFBUP-S, NFXUP-S

M40024 - 05/10 - Subject to change. © Belimo Aircontrols (USA), Inc.

AIR CONDITIONING PRODUCTS CO.
QUALITY PRODUCTS FOR AIR MOVEMENT EQUIPMENT

OPERATING INSTRUCTIONS
MOTORIZED DAMPERS
MODEL AMD/GMD 12" - 72"

Please read and save these instructions. Read carefully before attempting to assemble, install, operate or maintain the product described. Protect yourself and others by observing all safety information. Failure to comply with instructions could result in personal injury and/or property damage! Retain instructions for future reference.

INSTALLATION

ENSURE STRUCTURAL INTEGRITY OF WALL BEFORE BREACHING.

1. Cut opening required for correct damper size.
2. Do not force the damper into the opening.
3. Damper must be installed square and free from racking. Damper must operate freely.
4. Follow the **General Safety information** (page 18) and Wiring Diagram. Wire damper motor as illustrated.

**Note: Caulking, mounting hardware or flashing materials are not supplied with the damper.*

WIRING DIAGRAMS

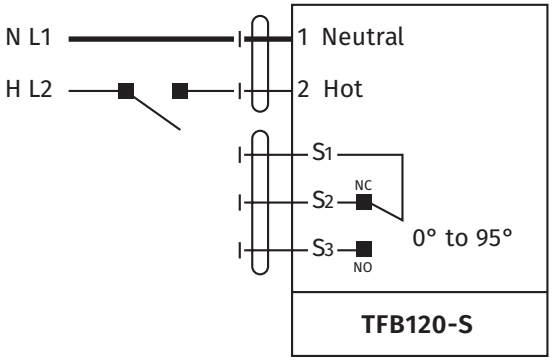

12" to 49" - 100 to 240V, 50/60 Hz

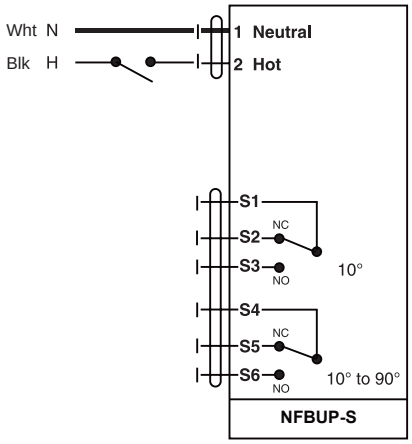

50" to 72" - 24 to 240V, 50/60 Hz

DIMENSIONS

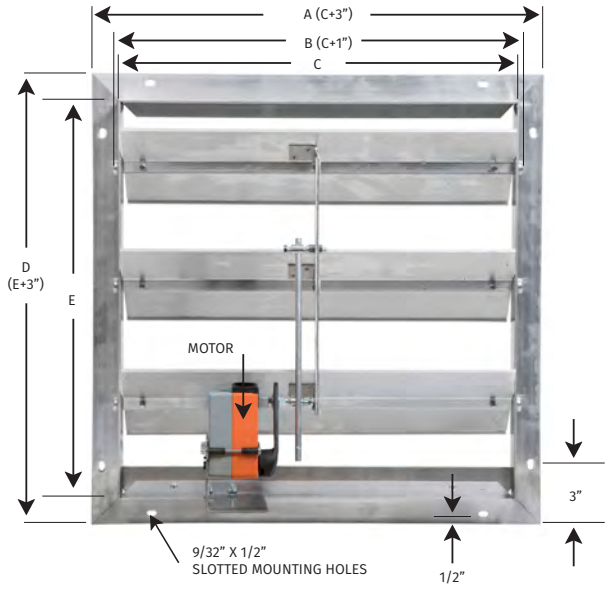

REAR VIEW

SIDE VIEW (12" to 24")

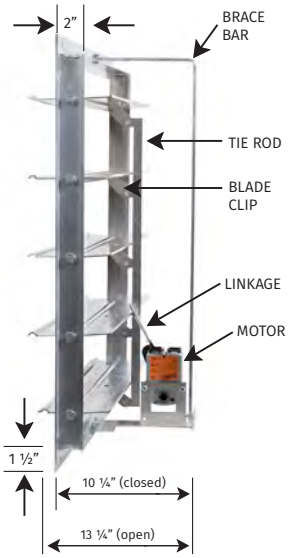

SIDE VIEW (25" to 72")

**NOTE: Above dimensions + or - normal tolerance of .0625"*

MOTOR SPECS:

DAMPER SIZES	MOTOR MANUFACTURER	MODEL NUMBER	POWER SUPPLY REQUIRED	MOTOR TYPE	TEMPERATURE RANGE
12” X 12” to 49” x 49”	Belimo	TFB120-S DAY	100-240 VAC 50/60 HZ	2 Position Spring Return	-22° to 122° F
50” x 50” to 72” x 72”	Belimo	NFBUP-S DAY	24-240 VAC 50/60 Hz	2 Position Spring Return	-22° to 122° F

STANDARD SIZES:

PART NO:	OVERALL (A&D) FRAME DIMENSION (Width x Height)	INSIDE (C&E) FRAME DIMENSION (Width x Height)	REQUIRED (B) HOLE OPENING (Width x Height)	FACE AREA (SQ. FT.)	EST. FREE AREA (SQ. FT.)
AMD / GMD 12”	15” x 15”	12” x 12”	13” x 13”	1.00	0.84
AMD / GMD 16”	19” x 19”	16” x 16”	17” x 17”	1.78	1.67
AMD / GMD 20”	23” x 23”	20” x 20”	21” x 21”	2.78	2.05
AMD / GMD 24”	27” x 27”	24” x 24”	25” x 25”	4.00	3.59
AMD / GMD 30”	33” x 33”	30” x 30”	31” x 31”	6.25	5.68
AMD / GMD 36”	39” x 39”	36” x 36”	37” x 37”	9.00	8.25
AMD / GMD 42”	45” x 45”	42” x 42”	43” x 43”	12.25	11.31
AMD / GMD 48”	51” x 51”	48” x 48”	49” x 49”	16.00	14.84
AMD / GMD 54”	57” x 57“	54” x 54”	55” x 55”	20.25	18.83
AMD / GMD 60”	63” x 63”	60” x 60”	61” x 61”	25.00	23.31

Note: Dimensions are approximate due to normal tolerances in the manufacturing process.
Estimated Free Area calculation is based upon the following formula: MD[A+B+ (N x C)]/144.
Free Area x FPM = CFM; actual performance may vary.

For detailed information on our Limited Warranty Policy, please visit **www.acpshutters.com**, or call **(734) 326-0050.**

MUH SERIES
UNIT HEATER

IDEAL SPACES

- Factories
- Warehouses
- Garages
- Stairwells
- Shipping Docks
- Power Stations
- Mechanical Rooms

COLORS

- Neutral Gray/Statuary Bronze

DIMENSIONS

- Varies (see diagram)

TEMP RANGE

- 40°– 90°F

CFM

- 350 – 3000

- Wide range of optional control kits are field-installable, increasing the unit's adaptability to specification market
- Small- to medium-case construction is 20-gauge steel with larger cabinet 18-gauge steel; completely enclosed fan motor
- Advanced pull-through air flow design draws air across heating element for even air distribution and cooler element operation
- Specially designed venturi outlet to meet required additional air throw in vertical position
- Branch circuit fusing (when required)
- 2-speed fan selector switch (25 to 50 kW models) and optional fan-only switch for air movement with no heat
- 1- or 3-phase wiring on 5 kW through 10 kW 208/240V and 15 kW 208V units (field-interchangeable)
- Aluminum-finned, copper-clad steel sheath heating element extends life due to cooler sheath temperature and faster heat dissipation
- 24V control transformer standard on most models, providing safer and more accurate means of temperature control. 3 kW and 5 kW, 208-277V, have line voltage controls as standard (24V control available on made-to-order basis)
- Automatic reset linear thermal cut-out, capillary type, provides protection over entire length of element areas (manual reset protection available on made-to-order basis)
- No piping flues, valves or traps needed for installation
- Individual stainless steel adjustable louvers to direct air flow

5 YEAR WARRANTY ELEMENT

1 YEAR WARRANTY WORKMANSHIP

MUH SERIES
UNIT HEATER

MODELS & SPECIFICATIONS

CATALOG NO.	UPC 6-85360	VOLTS	ELECTRICAL DATA			AMPS (3)	CONTROL VOLT (1)	2 STAGE ELEMENT CONTROL	AIR DELIVERY DATA FAN MOTOR DATA					MOUNTING HEIGHT			HOROIZ. THROW	WIRE SIZE	SHIP WT. (LBS.) W/ BRCKT
			PHASE	KW	BTU/HR.				CFM (2)	FPM (2)	ΔT(°F)	VOLTS	RPM (2)	HP	HORIZ.	VERT.			
MUH0381	04721 8	208	1	3	10.2	14.5	208	N/A	350	800	27°	208	1600	1/100	8	9	12	AWG 12	27
MUH0581*	04728 7	208	1-3	5	17	24	208	5A	350	800	45°	208	1600	1/100	8	9	12	AWG 10	27
MUH078	04735 5	208	1-3	7.5	25.6	36	24	5B	650	970	37°	208	1600	1/30	9	14	18	AWG 6	38
MUH108	04741 6	208	1-3	10	34.1	48	24	5B	650	970	49°	208	1600	1/30	9	14	18	AWG 4	38
MUH158	04745 4	208	1-3	15	51.2	72	24	5A	910	1640	52°	208	1530	1/20	11	20	35	AWG 2	53
MUH208	04749 2	208	3	20	68.2	56	24	5A	1320	2060	48°	208	1500	1/10	12	23	41	AWG 4	60
MUH308	04756 0	208	3	30	102.3	84	24	5A	2100/1800	2100/2030	45°/53°	208	1600/1375	1/4	12	20	50	AWG 1	93
MUH508	04766 9	208	3	50	170.5	139	24	5A	3000/2600	3260/2900	53°/61°	208	1525/1420	1/2	15	25	60	AWG 4/0	114
MUH0321	04716 4	208/240	1	2.2/3.0	7.5/10.2	11.0/12.5	208/240	N/A	350	800	27°	208/240	1600	1/100	8	9	12	AWG 12	27
MUH0521*	04722 5	208/240	1-3	3.7/5.0	12.6/17.0	18.0/21.0	208/240	5A	350	800	45°	208/240	1600	1/100	8	9	12	AWG 10	27
MUH072	04730 0	208/240	1-3	5.6/7.5	19.1/25.6	27.0/31.3	24	5B	650	970	37°	208/240	1600	1/30	9	14	18	AWG 8	38
MUH102	04736 2	208/240	1-3	7.5/10.0	25.6/34.1	36.0/42.0	24	5B	650	970	49°	208/240	1600	1/30	9	14	18	AWG 6	38
MUH152	04742 3	208/240	3	11.2/15.0	38.2/51.2	31.3/36.1	24	5C	910	1640	52°	208/240	1530	1/20	11	20	35	AWG 6	53
MUH202	04746 1	208/240	3	15.0/20.0	51.2/68.2	41.2/48.0	24	5C	1320	2060	48°	208/240	1500	1/10	12	23	41	AWG 4	60
MUH252	04750 8	208/240	3	18.7/25.0	63.8/85.2	52.0/60.0	24	5A	2100/1800	2100/2030	38°/44°	208/240	1600/1375	1/4	13	23	50	AWG 3	93
MUH302	04753 9	208/240	3	22.5/30.0	76.7/102.3	63.0/72.3	24	5A	2100/1800	2100/2030	45°/53°	208/240	1600/1375	1/4	12	20	50	AWG 2	93
MUH402	04760 7	208/240	3	30.0/40.0	102.3/136.4	83.4/96.4	24	5A	3000/2600	3260/2900	42°/49°	208/240	1525/1420	1/2	15	28	60	AWG 1/0	114
MUH502	04763 8	208/240	3	37.5/50.0	127.3/170.5	104.2/120.4	24	5A	3000/2600	3260/2900	53°/61°	208/240	1525/1420	1/2	15	25	60	AWG 3/0	114
MUH0371	04720 1	277	1	3	10.2	11	277	N/A	350	800	27°	277	1600	1/100	8	9	12	AWG 14	27
MUH0571	04727 0	277	1	5	17	18	277	N/A	350	800	45°	277	1600	1/100	8	9	12	AWG 10	27
MUH077	04734 8	277	1	7.5	25.6	27	24	5B	650	970	37°	277	1600	1/30	9	14	18	AWG 8	38
MUH107	04740 9	277	1	10	34.1	36	24	5B	650	970	49°	277	1600	1/30	9	14	18	AWG 6	38
MUH0341	04718 8	480	3	3	10.2	3.6	24	N/A	350	800	27°	480	1600	1/100	8	9	12	AWG 14	27
MUH0541	04725 6	480	3	5	17	6	24	N/A	350	800	45°	480	1600	1/100	8	9	12	AWG 14	27
MUH074	04732 4	480	3	7.5	25.6	9	24	5B	650	970	37°	480	1600	1/30	9	14	18	AWG 14	38
MUH104	04738 6	480	3	10	34.1	12	24	5B	650	970	49°	480	1600	1/30	9	14	18	AWG 14	38
MUH154	04743 0	480	3	15	51.2	18	24	5C	910	1640	52°	480	1530	1/20	11	20	35	AWG 10	53
MUH204	04747 8	480	3	20	68.2	24	24	5C	1320	2060	48°	480	1500	1/10	12	23	41	AWG 10	60
MUH254	04751 5	480	3	25	85.2	30	24	5C	2100/1800	2100/2030	38°/44°	480	1600/1375	1/4	13	23	50	AWG 8	93
MUH304	04754 6	480	3	30	102.3	36	24	5C	2100/1800	2100/2030	45°/53°	480	1600/1375	1/4	12	20	50	AWG 6	93
MUH404	04761 4	480	3	40	136.4	48	24	5A	3000/2600	3260/2900	42°/49°	480	1525/1420	1/2	15	28	60	AWG 4	114
MUH504	04764 5	480	3	50	170.5	60.2	24	5A	3000/2600	3260/2900	53°/61°	480	1525/1420	1/2	15	25	60	AWG 4	114
MUH0331	04717 1	347	1	3	10.2	8.6	347	N/A	350	800	27°	347	1600	1/100	8	9	12	AWG 14	27
MUH0531	04724 9	347	1	5	17	14.4	347	N/A	350	800	45°	347	1600	1/100	8	9	12	AWG 10	27
MUH073	04731 7	347	1	7.5	25.6	21.6	24	5B	650	970	37°	347	1600	1/30	9	14	18	AWG 14	38
MUH103	04737 9	347	1	10	34.1	28.8	24	5B	650	970	49°	347	1600	1/30	9	14	18	AWG 14	38
MUH0361	04719 5	600	3	3	10.2	2.9	24	N/A	350	800	27°	600	1600	1/100	8	9	12	AWG 14	27
MUH0561	04726 3	600	3	5	17	4.8	24	N/A	350	800	45°	600	1600	1/100	8	9	12	AWG 10	27
MUH076	04733 1	600	3	7.5	25.6	7.3	24	5B	650	970	37°	600	1600	1/30	9	14	18	AWG 14	38
MUH106	04739 3	600	3	10	34.1	9.7	24	5B	650	970	49°	600	1600	1/30	9	14	18	AWG 14	38
MUH156	04744 7	600	3	15	51.2	14.5	24	5C	910	1640	52°	600	1530	1/20	11	20	35	AWG 12	53
MUH206	04748 5	600	3	20	68.2	19.3	24	5C	1320	2060	48°	600	1500	1/10	12	23	41	AWG 12	60
MUH256	04752 2	600	3	25	85.2	24.2	24	5C	2100/1800	2100/2030	38°/44°	600	1600/1375	1/4	13	23	50	AWG 10	93
MUH306	04755 3	600	3	30	102.3	29	24	5C	2100/1800	2100/2030	45°/53°	600	1600/1375	1/4	12	20	50	AWG 8	93
MUH406	04762 1	600	3	40	136.4	38.7	24	5A	3000/2600	3260/2900	42°/49°	600	1525/1420	1/2	15	28	60	AWG 6	114
MUH506	04765 2	600	3	50	170.5	48.3	24	5A	3000/2600	3260/2900	53°/61°	600	1525/1420	1/2	15	25	60	AWG 3	114

NOTE: All standard units are supplied with a low voltage control transformer and contactor (24V) except MUH03 and MUH05, 208V, 240V and 277V models. Low voltage control on these units is available on made to order. All units are also available on special order for 120V control; internal with transformer or external without transformer. On dual-voltage units CFM, FPM, & RPM ratings are listed at higher voltage operation. On dual-phase units maximum amp draw is listed for respective voltage. 25 thru 50 KW models having two-speed motors and dual CFM ratings are listed in Full Line Catalog. 5A. Standard; 5B. Optional - made to order - amp load unbalanced on three-phase; 5C. Optional - made to order - amp load balanced on three-phase.

*Must use two-stage Thermostat on 3Ø operation.

DIMENSIONS

CATALOG NO.	HEIGHT (IN)	WIDTH (IN)	DEPTH (IN)
MUH03 & 05	16	14	7-1/2
MUH07 & 10	21-3/4	19	7-1/2
MUH15 & 20	21-3/4	19	12-3/4
MUH25 & 30	30	26-5/8	11-3/4
MUH40 & 50	30	26-5/8	17-1/8

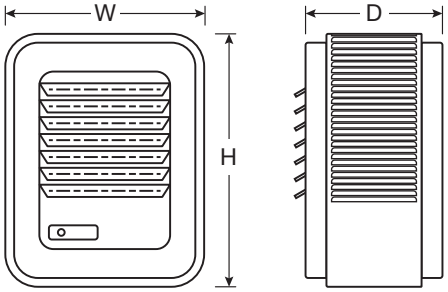

OPTIONAL FIELD-INSTALLED CONTROLS

CATALOG NO.	UPC	DESCRIPTION	ELECTRICAL RATING	COMPATIBLE WITH
UHMT1	6 85360 15241 7	Single Pole Internal Thermostat-Temp Range: 40°- 85°F	25A @ 120, 240VAC Res. 22A @ 277VAC Res.	All MUH Series Heaters (except MUH0521 3 PH, MUH0581 3 PH which use UHMT2)
UHMT2	6 85360 15242 4	Two Stage Internal Thermostat-Temp Range: 40°- 85°F	25A @ 120, 240VAC Res. 22A @ 277VAC Res. 125VA	MUH0521 3 PH, MUH0581 3 PH, MUH158, MUH208, MUH252, MUH302, MUH308, MUH402, MUH404, MUH406, MUH502, MUH504, MUH506, MUH508
MCFS	6 85360 04637 2	Internal Summer Fan Switch 250, 480, 600V.A.C. 1,2 OR 3 PH	Pilot Duty 6A, 600VAC Res. 2 HP	All MUH Series Heaters
MRFS1	6 85360 04708 9	Remote Summer Fan Switch (Line Voltage)	2 HP, 250-480VAC	All MUH Series Heaters
MRFS2	6 85360 04709 6	Remote Summer Fan Switch with Relay (24V Coil-Single Pole Normally Open)	6 AFL, 35 ALR, 250VAC, 60Hz 3 AFL, 18 ALR, 480VAC, 60Hz	All MUH Series Heaters (except MUH0321, MUH0371, MUH0381, MUH0521, MUH0571, MUH0581) Units unless optional control transformer is supplied
MHRT	6 85360 04694 5	Heat Recovery Thermostat with Relay (24V Coil-Single Pole Normally Open) Hi - 120°F, Low - 60°F	6 AFL, 35 ALR, 250VAC, 60Hz 3 AFL, 18 ALR, 480VAC, 60Hz	All MUH Series Heaters (except MUH0321, MUH0371, MUH0381, MUH0521, MUH0571, MUH0581) Units unless optional control transformer is supplied
MPDS25	6 85360 04703 4	Power Disconnect Switch (3-Pole)	30A @ 600VAC, Res.	MUH0321, MUH0341, MUH0371, MUH0381, MUH0521, MUH0541, MUH0571, MUH0581, MUH073, MUH074, MUH076, MUH104, MUH106, MUH154, MUH156, MUH204, MUH206
MPDS60	6 85360 04704 1	Power Disconnect Switch (3-Pole)	80A @ 600VAC, Res.	MUH072, MUH077, MUH078, MUH102, MUH103, MUH107, MUH108, MUH152, MUH202, MUH208, MUH252, MUH254, MUH256, MUH304, MUH306, MUH404, MUH406, MUH504, MUH506

NOTE: Any field installed options assembled in the factory require added surcharge. See price book for charges. MPDS60 disconnect switch is not suitable for field installation on 7.5kw and 10kw unit heaters.

DIFFUSER SELECTOR TABLES FOR VERTICAL MOUNTING

CATALOG NO.	DESCRIPTION	CATALOG NO.	MAX. MOUNTING HEIGHT	(A) DIMENSION	DIFFUSER PATTERN AND AREA
NONE NONE	WITHOUT DIFFUSER No diffuser needed where a straight downflow air pattern is required. For maximum air throw, remove louvers. Any of three diffusers can be added to basic heater.	MUH03 &MUH05 MUH07 & MUH10	9 14	18 26	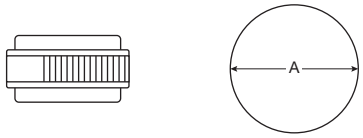
NONE NONE		MUH15 MUH20	20 23	35 40	
NONE NONE		MUH25 MUH30	23 20	63 55	
NONE NONE		MUH40 MUH50	28 25	70 63	
MLDS MLDM	LOUVER DIFFUSER Permits directional (straight line) air flow as in air curtain application over doorways. Rectangular coverage, Louvers can be turned in either direction.	MUH03 & MUH05 MUH07 & MUH10	9 14	25(A) 12(B) 39(A) 19(B)	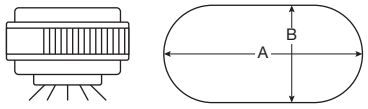
MLDM MLDM		MUH15 MUH20	18 20	50(A) 25(B) 56(A) 28(B)	
MLDL MLDL		MUH25 MUH30	23 20	72(A) 36(B)	
MLDL MLDL		MUH40 MUH50	24 22	88(A) 44(B) 80(A) 40(B)	

MUH SERIES
UNIT HEATER

OPTIONAL MOUNTING BRACKETS

CATALOG NO.	UPC	COMPATIBLE WITH	SHIP WT. (LBS)
B10	6 85360 15229 5	MUH03 - 10	8
B20	6 85360 15230 1	MUH15 & 20	10
B30	6 85360 15231 8	MUH25 & 30	13
B50	6 85360 15232 5	MUH40 & 50	15

OPTIONAL CEILING MOUNTING BRACKETS

CATALOG NO.	UPC	COMPATIBLE WITH	SHIP WT. (LBS)
CMB10	6 85360 15236 3	MUH03 - 10	3
CMB20	6 85360 15237 0	MUH15 & 20	4
CMB30	6 85360 15238 7	MUH25 & 30	5
CMB50	6 85360 15239 4	MUH40 &50	6

OPTIONAL VERTICAL CEILING MOUNTING BRACKETS

CATALOG NO.	UPC	COMPATIBLE WITH	SHIP WT. (LBS)
VDMB5	6 85360 15245 5	MUH03 - 05	5
VDMB20	6 85360 15246 2	MUH07 - 20	7
VDMB50	6 85360 15247 9	MUH25 - 50	9

MOUNTING LIMITATIONS: Unit heaters should not be used in potentially explosive atmospheres. The finish is not intended for direct salt spray exposure in marine applications or the highly corrosive atmospheres of swimming pools, chemical storage bins, etc. Do not install unit heaters above recommended maximum mounting height. Obstructions must not block unit heater air inlet or discharge. Heaters must be mounted at least 7 ft. above the floor to prevent accidental contact with the heating element or fan blade which could cause injury.

FACTORY-INSTALLED OPTIONS FOR CONTROLS & ACCESSORIES

DESCRIPTION
MUH03 & 05 (208, 208/240, 277V Supply) 24 or 120V Control Transformer and Power Contactor 24 or 120V H.C. Power Contactor
MUH03 & 05 (480V Supply) & MUH07 thru MUH50 Optional 120V Control
2-Stage Control of Elements (See Note 5)
Manual Reset
Outlet Mesh (Bird Screen) For all MUH Heaters

NOTE: Any factory-installed options require added surcharge. See price book for charges or contact factory.

BRACKET SIZE

DIMENSION	3-20 kW (IN.)	25-50 kW (IN.)
A	7-1/4	9-7/16
B	9-1/2	14-3/8
C	7-1/4	12-1/8
D	11-5/16	2-1/16
E	2-1/4	3
L	20-1/2	28-15/16
M	9-15/16	14-15/16
N	3-1/4	4-1/2

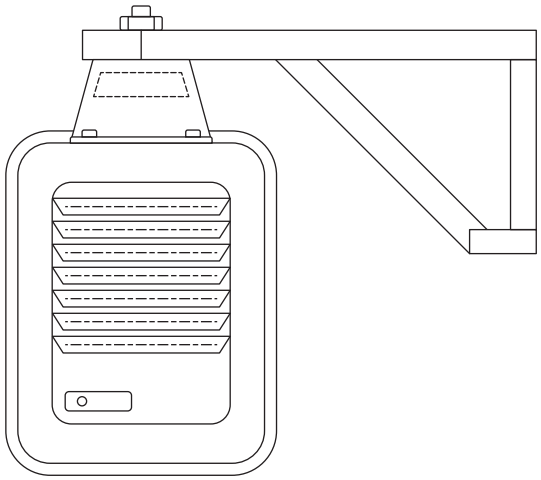

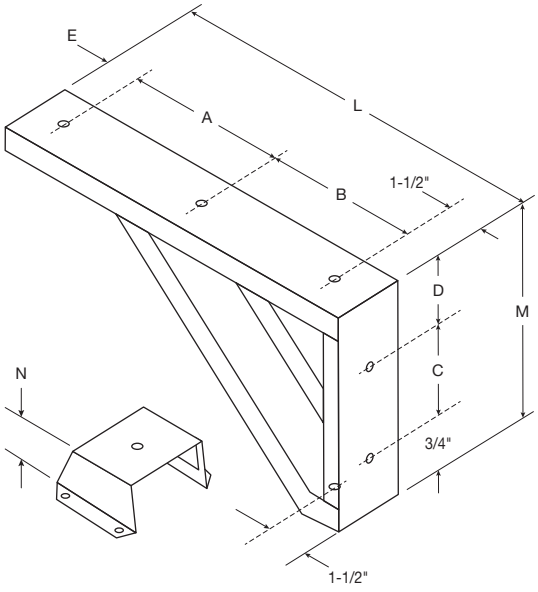

Catalog Number	
Notes	
Type	

Contractor Select™

LQM Quantum®

LED Emergency Exit

The Lithonia Lighting® LQM Quantum® LED Exit Signs are suitable for identifying emergency exits. This fully assembled single-face exit with extra faceplate is available in red or green letters. Ideal for applications requiring attractive, quick-installation exit signs and low energy consumption. The emergency power provides 90 minutes of illumination in the event of a power loss.

FEATURES:

- Test switch and status indicator for low maintenance (EL N emergency models only)
- UL indoor damp location 50° to 104°F (10°C to 40°C) listed standard
- For use with Dual voltage 120/277VAC, 60Hz

CERTIFIED IN TITLE 20 †

† Exit Signs Certified in the CA Title 20 Appliance Efficiency Database.

Catalog Number	UPC	Description	Supply Voltage	Input Wattage		Input Amps		Pallet Qty	Carton Qty
				120	277	120	277		
LQM S W 3 R 120/277 M6	784231011508	Red exit, AC only, White	120/277, 60Hz	0.62W	0.69W	0.05	0.06	270	6
LQM S W 3 G 120/277 M6	784231011584	Green exit, AC only, White	120/277, 60Hz	0.62W	0.74W	0.05	0.06	270	6
LQM S W 3 R 120/277 EL N M6	784231011553	Red exit with backup battery, White	120/277, 60Hz	0.71W	0.92W	0.05	0.06	270	6
LQM S W 3 G 120/277 EL N M6	784231011614	Green exit with backup battery, White	120/277, 60Hz	0.66W	0.70W	0.05	0.06	270	6

Accessories: *Order as separate catalog number.*

ELA WG1	Wireguard (back mount only, 13 3/4"H x 15 1/4"W x 6"D) [1]
ELA LQMUS12	12" Stem kit, brushed aluminum with white canopy [2]

NOTES

1. See spec sheet ELA-WG for more information.
2. See spec sheet ELA-STEMKITS for more info.

Specifications

INTENDED USE:
Ideal for applications requiring attractive, quick-installation exit signs and low energy consumption.

CONSTRUCTION:
Engineering-grade thermoplastic housing is impact-resistant, scratch-resistant, and corrosion-proof. UL94V-0 flame rating. UV-stable resin resists discoloration from natural and man-made light sources.

Rugged unibody housing snaps together with no additional mechanical fasteners. Faceplate and back cover are interchangeable on housing. Positive snap-fit tabs hold faceplate securely, yet easily removable for lamp compartment access.

Universal directional Chevron inserts are easily removed and reinserted. Uniform illumination without shadows or hot spots. Reinforced, impact-resistant color panels. Letters 6" high with 3/4" stroke, with 100 ft. viewing distance rating, based upon UL924 standards.

OPTICS:
LEDs mounted on printed circuit boards. Low energy consumption – less than one watt.

EL N operation: LED lamp operates in normal (AC input) and emergency (DC input) modes.

The typical life of the exit LED lamp is 5 years, based on 24/7 operation.

ELECTRICAL:
Dual-voltage input 120V or 277V AC. Non-emergency (AC only without battery) or Emergency exit with battery.

Battery: (EL N models) maintenance-free ni-cad battery provides 90 minutes of emergency power. The emergency model includes the test switch, status indicator and rechargeable battery.

INSTALLATION:
Universal mounting canopy for top or end mount (canopy included). Back mount standard for single face only.

Ships standard as single face exit with additional face plate and color panel. Allows capability to convert a single sided exit to a double sided exit in the field.

LISTINGS:
UL damp location listed 50°-104°F (10°-40°C) standard. NOM Certified. Meets UL924, NFPA 101 (current Life Safety Code), NEC and OSHA illumination standards. Meets all applicable FCC Title 47, Part 15, Subpart B requirements.

WARRANTY:
5-year limited warranty. This is the only warranty provided and no other statements in this specification sheet create any warranty of any kind. All other express and implied warranties are disclaimed. Complete warranty terms located at:
www.acuitybrands.com/support/warranty/terms-and-conditions

All life safety equipment, including emergency lighting for path of egress must be maintained, serviced, and tested in accordance with all National Fire Protection Association (NFPA) and local codes. Failure to perform the required maintenance, service, or testing could jeopardize the safety of occupants and will void all warranties.

Note: Actual performance may differ as a result of end-user environment and application. All values are design or typical values, measured under laboratory conditions at 25 °C. Specifications subject to change without notice.

Dimensions

Length: 11-3/4 (29.8)
Depth: 2 (5.1)
Height: 7-5/8 (19.3)
Weight: 2.6 lbs (1.2 kgs)

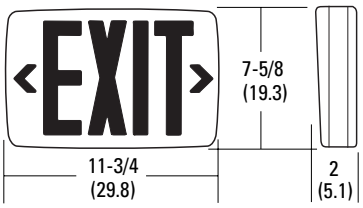

All dimensions are inches (centimeters) unless otherwise indicated.

© 2019-2024 Acuity Brands Lighting, Inc. All rights reserved. Rev. 08/07/24

product information

6406 – GRT03307

T009-WH12 White 90 Gloss

Cardinal's 6406-GRT03307 T009-WH12 White 90 Gloss catalyzed with 67-ELHP aliphatic two-component polyurethane coating. This coating is well suited for exterior applications on both metal and plastic. This product was formulated to meet strict air quality regulations, while maintaining the application and performance benefits of a conventional polyurethane coating.

TYPICAL USES:

- Top coat for decorative and protective use on metal and plastic
- General metal finishing
- Electronic enclosures
- Trailers and vehicles
- Machinery

BENEFITS:

- Metal Rule 1107 Compliant VOC – 2.8 lbs/gal
- Very high gloss
- Excellent chemical and solvent resistance
- UL approved (phosphatized steel electronics enclosures)
- Available in a complete range of colors, glosses, textures and cardtex finishes
- RoHS / WEEE compliant

CURED FILM PROPERTIES:

Testing conducted on 6404 – GRT03307 S/G T009-WH12 White 90 Gloss catalyzed with 67-ELHP at 1.5 mils DFT (Dry Film Thickness) over 20 gauge Bonderite 1000® test=panels, cured 30 minutes at 180°F and air dried 14 days.

TEST	METHOD	PARAMETERS	RESULT
Adhesion	ASTM D3359	Cross-hatch tape	0% failure
Impact:	ASTM D2794	Direct Reverse	130 in. lbs. 60 in. lbs
Flexibility:	ASTM D1737	1/8" mandrel	No cracking
Hardness	ASTM D3363	Pencil	H - 2H
Abrasion	ASTM D4060	CS-17 wheels, 1 kg, 1000 cycles	Less than 100 mg loss
Humidity	ASTM D2247	168 hrs	No effect
Salt Spray	ASTM B117	1000 hrs 95°, 5% salt solution	Less than 3/16" creep - along scribe, otherwise, no effect
UV Light	ASTM G53	1000 hrs	90.3% gloss retention
Solvent Resistance	ASTM D4752	MEK 100 rubs IPA 200 rubs	No effect No effect
Chemical & Stain Resistance	ASTM D1308 30 min. spot A: No effect B: Slight dulling C: Moderate effect D: Discolored & softened	A – 0.1N HCl, 30 wt. motor oil, ammonia, butyl carbitol, butyl cellosolve, Cascade®, Clorox®, Coca Cola®, coffee, diethyl ether, Drano®, Fantastic®, fiber pen ink, floor stripper, gasoline, IPA, Ivory® Liquid, lanolin lotion, lemon juice, Snap®, Spic & Span®, tap water, vegetable oil, water base ink, WD-40®. B – ball point pen ink, carbon disulfide, correction fluid, Freon TF®, MEK, nail polish. C – chloroform. D – solvent base ink.	

FOR INDUSTRIAL USE ONLY

TYPE: Aliphatic polyester polyurethane.

COMPONENTS: Two.

COLOR: T009-WH12 White 90 Gloss

GLOSS: Semi-gloss (60 +/- 1 @ 60°)

COVERAGE: At 1.0 mil DFT, 65% transfer efficiency(TE)

Mixed paint, 2.75 lbs/gal : 552 ft^2/gal.

Calculation: 1604 ft2/gal x % volume solids x TE ÷ DFT

VOC MIXED: 360 grams/liter = 3.0 lbs/gal excluding
333 grams/liter = 2.75 lbs/gal including

VOLUME SOLIDS:

6406-GRT03307…….. 57%
67-ELHP…… 45%
Mixed to 2.75 lbs/gal ……. 53%

FLASH POINT: 24°F TCC

SHELF LIFE: 1 year from date of manufacture in factory sealed container.

APPLICATION: After preparing the surface, thoroughly mix component 1 before adding catalyst. Mix only the amount of material needed. The base to catalyst proportion must be measured accurately, by volume only, to obtain optimum film properties. Do not use reducers that contain water or alcohol; these react with the catalyst and can cause a variety of problems. Be aware of spray-able pot life. Brushing, rolling and dipping are not recommended.

APPLICATION CONDITIONS:

- Temperature – Apply coating within 55-100 F.
- Relative Humidity – Not recommended to apply in conditions greater than 85%.
- Substrate temperature – 5^0 above the dew point and a minimum of 55^0 F.

If coating is not applied within these conditions then the cured coating properties may not be representative.

MIX RATIOS: Two components must be mixed properly to obtain coating performance. Thinning depends on applicator's regulatory VOC limits.

Parts are by volume	MIX RATIO
6406-GRT03307	5
67-ELHP catalyst	1
1600-02 reducer	0

VISCOSITY: At 2.75 lbs/gal, most semi gloss colors will be in the 20"-40" #3 Zahn range.

SPRAY-able Pot Life: 2-3 hrs. at 2.75 lbs. VOC/gal

Note: If material is accelerated the actual pot life may vary depending on amount added.

RECOMMENDED DFT: 2.0 – 2.5 mils

CURE:	Air Dry	Force Dry *
Tack free	2 hrs.	1 hr at 120° F
Dry to handle	24 hrs.	30 min at 140° F
Dry hard	72 hrs.	15 min at 180° F

(At 1.5 mils dry film thickness, 78° F, 50% RH)

(Continued on page 2)

So. El Monte, CA 1329 Potrero Ave. 91733 (323) 283-9335 (626) 444-9274 Fax (626) 444-0382
www.cardinalpaint.com

NO WARRANTY EXPRESSED OR IMPLIED, ACCEPTABILITY TO BE DETERMINED BY USER, SPECIFICATIONS ARE SUBJECT TO CHANGE WITHOUT NOTICE

SURFACE PREPARATION AND PRIMING: The most important steps in a successful coating process are cleaning, pretreatment and priming. The following is a brief outline of some basics for unpainted substrates. It is not intended to be all-inclusive. For more information on your particular application contact Cardinal.

Cleaning the substrate: All surfaces to be coated, must be free of dirt, grease, oil, oxidation, mill scale, and all other contaminants. The surface must be thoroughly dry before painting. Air quality regulations have limited the allowable emissions from cleaning operations.

Steel — A phosphate chemical conversion coating is highly recommended. When this is not possible, a vinyl acid wash pretreatment primer is recommended such as Cardinal's 4860 series primers. UL approval on our product requires the minimum of a three stage iron phosphate pre-treatment.

Aluminum — A chemical conversion coating is highly recommended. When this is not possible, a vinyl acid wash pretreatment primer is recommended such as Cardinal's 4860 series primers.

Galvanized — Cardinal's W-303-A surface preparation solution helps improve adhesion followed by a vinyl acid wash pretreatment primer such as Cardinal's 4860 series primers.

Stainless Steel — Brush-off or blast clean per SSPC-SP 7 to a uniform profile of 1.5 mils. Cardinal's W-303-A surface preparation solution can help improve adhesion followed by a vinyl acid wash pretreatment primer such as Cardinal's 4860 series primers.

Plastic — All mold release should be completely removed. 6400 series polyurethane is compatible with a variety of plastics, however, since there are numerous different formulations of plastic, a trial sample should be painted and checked before running production. If 6400 attacks or weakens the plastic, a barrier coat of 3777-1 clear waterborne acrylic enamel may help.

PRIMER SELECTION:

PRODUCT NO.	DESCRIPTION	FUNCTION
6460-4702	Polyurethane Gray	Corrosion resistance, some surfacing
7760-4702	Epoxy Gray	Corrosion resistance, chemical resistance
7063-4702	Epoxy Gray	Corrosion resistance, chemical resistance and high build
3777-1	Waterborne Acrylic Clear	Barrier coat for some plastics

RELATED PRODUCTS:

PRODUCT NO.	DESCRIPTION
1600 Series Reducers	Thinners. Urethane grade. 1600-01, fast; 1600-02, medium; 1600-03, slow.
EL-005	Accelerator. Speeds up dry time (and shortens pot life).
J-3081	Surfactant. Helps eliminate blisters, bubbles, pin holes, solvent-pop.
P-5033	Surfactant. Helps eliminate craters and fish-eyes.

TROUBLE SHOOTING:

PROBLEM	CAUSE	REMEDY
Blisters, pin holes or solvent pop	Water contamination. Entrapped air. Entrapped solvent	Eliminate water – Check air lines. Use fresh catalyst. Use urethane grade thinners. Increase atomization, decrease film build.
Craters	Contaminated ambient air, e.g., silicone mist, dust.	Locate and eliminate source of contamination.
Fish-eyes	Substrate contamination.	Clean and prepare substrate.
Not drying	Alcohol in reducer. Wrong catalyst ratio.	Use Cardinal's 1600 series or urethane grade reducers only. Double check mix ratio.
Poor adhesion	Improper surface preparation.	See surface preparation section.
Gloss variation	Variation in application, cure schedule, catalyst ratio, humidity.	Consistent gloss depends upon consistent process.

PRODUCT IDENTIFICATION

6 4 0 6 – G R T 0 3 3 0 7 (example)

- Color number
- Gloss: 0 = flat; 1 = 10°; 2 = 20° . . . etc.; 70° - 90°+ = high gloss
- Special: e.g., 2 = metallic; 3 = cardtex; 4 = texture; 6 = primer; 7 = clear
- Product type

* Some Air quality regulations require a maximum temp. of 194° F to qualify as an "air dry" system which generally have higher VOC limits than baking systems.

APPLICATION EQUIPMENT: Most air quality regulations require the paint application transfer efficiency to be 65% or better. This generally means using electrostatic or high volume low pressure (HVLP) spray guns. Otherwise, conventional pressure feed, airless or air assisted airless spray equipment can be used. Air supply lines need water and oil traps.

EQUIPMENT CLEAN-UP: Clean up should be done as soon as possible keeping in mind the pot life of the mixed paint. Avoid leaving catalyzed paint in the lines. Air quality regulations have limited the allowable emissions from cleaning operations.

PRODUCT LIMITATIONS:

- Catalyst reacts with water. Air supply should be dry. Containers should be kept tightly closed. Use urethane grade thinners only.
- Alcohols and glycols interfere with curing chemistry and should be avoided. They can be found in some lacquer thinners and certain synthetic reducers.
- Optimum film properties are dependent upon proper mixing of paint and catalyst.

SAFETY: Refer to the product's Safety Data Sheet (SDS) for complete safety information. Contains organic solvents. Use with adequate ventilation. Do not breathe vapors or spray mists. If component TLVs are exceeded, a NIOSH approved air supplied respirator is advised. See SDS for TLV information. Contents are FLAMMABLE. Keep from heat, sparks or open flame. Allergic reactions are possible. Avoid use by persons with respiratory problems. Avoid contact with eyes, skin, and clothing. Wash thoroughly after handling.

FIRST AID:

Eye contact: flush immediately with plenty of water for at least 15 min. and get medical attention. Skin contact: wash thoroughly with soap and water for 5 minutes. If swallowed, do not induce vomiting and get medical attention immediately.

A25JEP

IMPORTANT: Warranty and Disclaimer — The performance characteristics of these products vary according to product application, operating conditions, materials applied to or with and use. Since these factors can affect results, we strongly recommend that you make your own test to determine to your satisfaction whether the product is of acceptable quality, has not been affected by storage or transport and is suitable for your particular purpose under your own operation conditions prior to using any product in full scale production. Seller warrants the products to be free from defects in materials and workmanship. SUCH WARRANTY IS EXCLUSIVE AND IS IN LIEU OF ANY OTHER WARRANTY, EXPRESSED OR IMPLIED, INCLUDING, BUT NOT LIMITED TO, ANY IMPLIED WARRANTY OF MERCHANTABILITY OF FITNESS FOR A PARTICULAR PURPOSE. No representative of ours has authority to waive or change this provision, which applies to all sales of these products.

4545 FM 775 Seguin, TX 78155
10310 Fischer Rd, Von Ormy, TX 78073
830-900-3190
contact@tomballcontrols.com
www.tomballcontrols.com

4

Lifting Diagrams

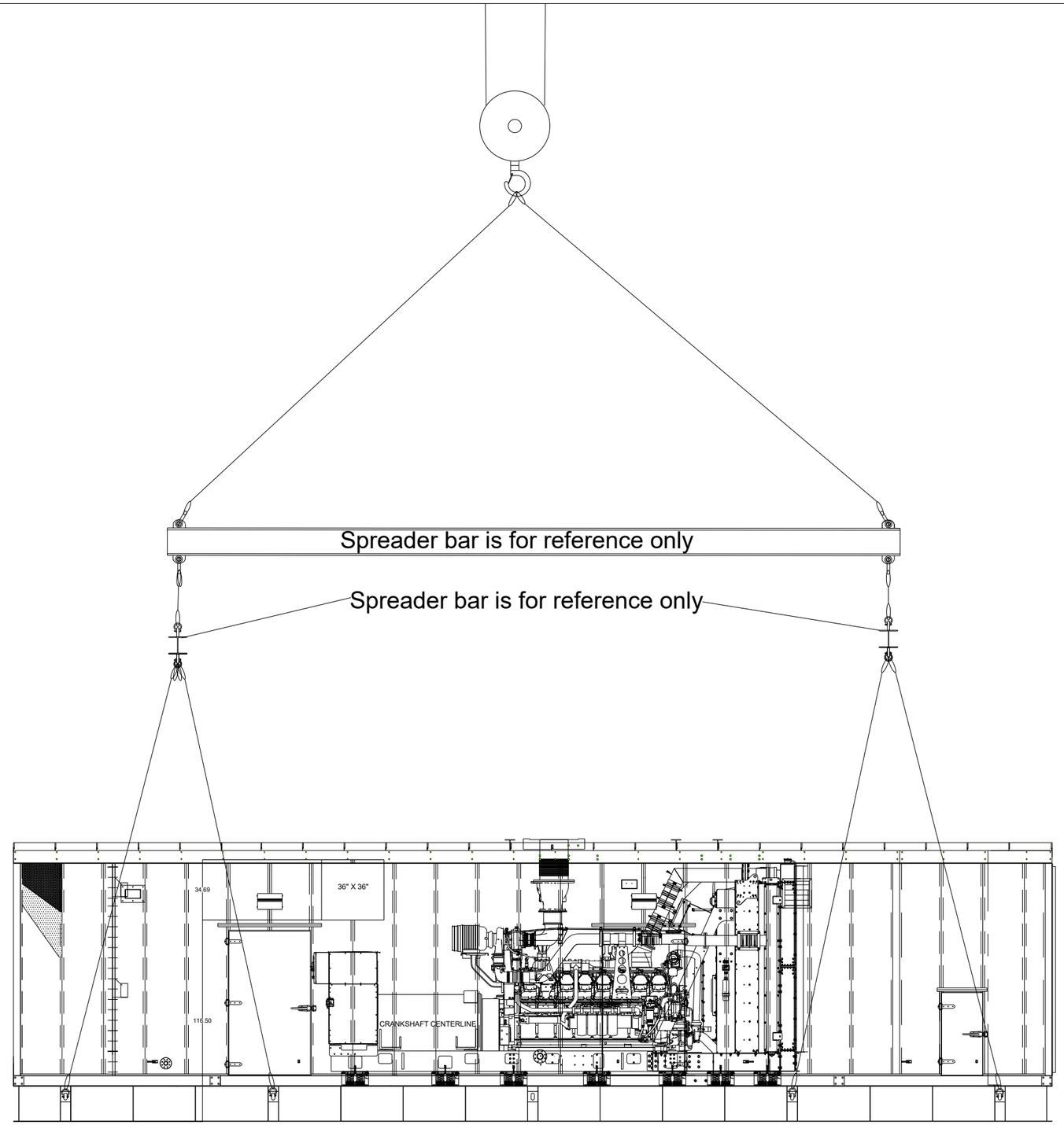

TOMBALL CONTROLS

PROPRIETARY AND CONFIDENTIAL
THE INFORMATION CONTAINED IN THIS DRAWING IS THE SOLE PROPERTY OF TOMBALL CONTROLS. ANY USE OR REPRODUCTION IN PART OR AS A WHOLE WITHOUT THE WRITTEN PERMISSION OF TOMBALL CONTROLS IS PROHIBITED. THIS WORK IS INTENDED SOLELY FOR THE PROJECT NAMED.

UNLESS OTHERWISE SPECIFIED:
DIMENSIONS ARE IN INCHES
TOLERANCES:
FRACTIONAL ± 1/8"
ANGULAR ± 3°
DECIMAL ± 0.125"
INTERPRET PER ASME Y14.5-2009

MATERIAL

FINISH

DO NOT SCALE DRAWING

	NAME	DATE
DRAWN		
ENG APPR.		
MFG APPR.		
Q.A.		

COMMENTS:

TITLE: CHQ HYPERION

SIZE	DWG. NO.	REV
C	Lifting Diagram	C

SCALE: 1:1 WEIGHT: SHEET 8 OF 8

4545 FM 775 Seguin, TX 78155
10310 Fischer Rd, Von Ormy, TX 78073
830-900-3190
contact@tomballcontrols.com
www.tomballcontrols.com

5

Warranty Statement

Tomball Controls
4545 FM 775
Seguin, TX 78155

WARRANTY STATEMENT

Seller warrants its goods to be free from defects in material and/or workmanship under normal use and service for a period of one (1) year from the date of purchase, subject to the terms and conditions set forth below (the "Express Warranty"). Seller does not warrant its goods against any defect except as set forth above, and Seller is not responsible for, and it does not warrant against, any defect or damage caused by transportation, storage, improper installation, maintenance, internal or external hostile environment, misuse, abuse, negligence, accident, modification, tampering, the attachment of any unauthorized accessory, alteration to the goods, or any other conditions whatsoever that do not constitute a defect in material and/or workmanship. Seller's sole responsibility under this Express warranty shall be, at its option, to either repair or replace any goods which fail during the warranty period, provided that Buyer has promptly reported same to Seller in writing, and complies with the provisions of this Express Warranty.

EXCEPT FOR THE EXPRESS WARRANTY DESCRIBED HEREIN, SELLER SEPCIFICALLY DISCLAIMS AND EXCLUDES ANY AND ALL EXPRESS AND IMPLIED WARRANTIES WITH REGARD TO ITS GOODS, INCLUDING, BUT NOT LIMITED TO, THE IMPLIED WARRANTIES OF MERCHANTABILITY, FITNESS FOR USE, AND FITNESS A PARTICULAR PURPOSE; ALL IMPLIED WARRANTIES ARISING FORM TRADE USAGE, COURSE OF DEALING, COURSE OF PERFORMANCE OR ANY OTHER IMPLIED WARRANTIES; AND THE EXPRESS WARRANTY STATED HEREIN IS IN LIEU OF ALL OBLIGATIONS OR LIABILITIES ON THE PART OF SELLER FOR DAMAGES, INCLUDING BUT NOT LIMITED TO, INCIDENTAL OR CONSEQUENTIAL DAMAGES, ARISING OUT OF OR IN CONNECTION WITH THE USE OR PERFORMANCE OF THE GOODS PURCHASED BY BUYER.

NEITHER SELLER NOR ITS AFFILIATED COMPANIES SHALL BE LIABLE TO BUYER IN CONTRACT OR IN TORT (INCLUDING NEGLIGENCE) FOR DAMAGE TO OR LOSS OF OTHER PROPERTY OR EQUIPMENT, LOSS OF PROFITS, REVENUE OR GOOD WILL, LOSS OF USE OF EQUIPMENT, FACILITY OR DATA, EXPENSES INVOLVING COSTS OF CAPITAL, COST OF PURCHASED OR REPLACEMENT POWER OR TEMPORARY EQUIPMENT (INCLUDING ADDITIONAL EXPENSES INCURRED IN USING EXISTING FACILITIES), CLAIMS OF CUSTOMERS, EMPLOYEES OR ANY OTHER PERSONS AFFILIATED, ASSOCIATED OR IN PRIVITY WITH BUYER, OR FOR ANY SPECIAL, INDIRECT, INCIDENTAL OR CONSEQUENTIAL DAMAGES BY REASON OF BREACH OF THE EXPRESS WARRANTY STATED HEREIN.

THE REMEDIES OF BUYER SET FORTH HEREIN ARE EXCLUSIVE WITH RESPECT TO BREACH OF THE EXPRESS WARRANTY STATED HEREIN, AND THE TOTAL LIABILITY OF SELLER FOR BREACH OF SAID EXPRESS WARRANTY, AND/OR AS A RESULT OF THE MANUFACTURE, SALE, DELIVERY, INSTALLATION OR TECHNICAL DIRECTION OF INSTALLATION, REPAIR OR USE OF ANY GOODS FURNISHED TO BUYER, WHETHER IN CONTRACT OR IN TORT (INCLUDING NEGLIGENCE), SHALL NOT EXCEED THE PURCHASE PRICE OF THE GOODS DETERMINED BY SELLER TO BE DEFECTIVE IN MATERIAL AND/OR WORKMANSHIP.

To obtain warranty inspection on any of the Seller's goods, contact the Seller for field service or warranty shipping instructions. All Express Warranty claims must be made to the Seller or one of its authorized agents, failure to do so shall void the Express Warranty.

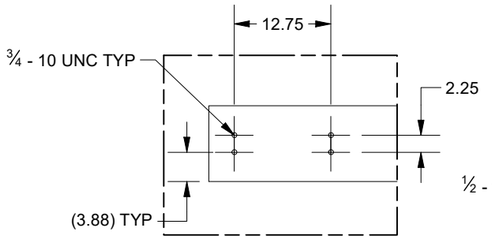

DETAIL B
1" STEEL PLATE
14 PLACES

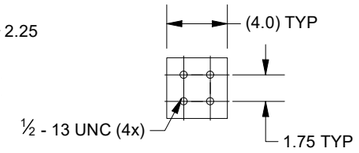

DETAIL D
¾" SS GROUND PAD
2 PLACES

ITEM	QTY	PART NUMBER	DESCRIPTION
1	1	TBC 133748-DEF	TANK, 377 GAL 134x96x9.63 DEF TANK
2	1	FUEL POLISH RETURN	2" NPT X 1" NPT BUSHING W/ 1" NPT DIP TUBE
3	1	LOW LEVEL SWITCH	2" NPT LOW LEVEL SWITCH, 50%
4	1	FUEL IN BASIN ALARM	2" NPT TOP MOUNT RUPTURE BASIN ALARM
5	1	HIGH LEVEL ALARM PANEL	2" NPT HIGH LEVEL SWITCH, 90%, WIRED TO ALARM PANEL
6	1	VISUAL LEVEL GAUGE	2" NPT MECHANICAL FUEL GAUGE

ITEM	QTY	PART NUMBER	DESCRIPTION
7	1	FUEL FILL	4" NPT OVERFILL PROTECTION VALVE SET AT 95% WITH A 2" CAM AND GROOVE FUEL INLET
8	1	5 GAL FUEL FILL/SPILL	4" NPT X 5 GAL FILL/SPILL BOX
9	1	FUEL RETURN	2" NPT X 1" NPT BUSHING W/ 1" NPT DIP TUBE
10	1	FUEL SUPPLY	2" NPT X 1" NPT BUSHING W/ 1" NPT DIP TUBE
11	1	FUEL POLISH SUPPLY	2" NPT X 1" NPT BUSHING W/ 1" NPT DIP TUBE
12	1	SECONDARY EMERGENCY VENT	8" NPT UL CERTIFIED EMERGENCY VENT
13	1	NORMAL VENT	2" NPT ATMOSPHERIC MUSHROOM VENT
14	1	PRIMARY EMERGENCY VENT	8" NPT UL CERTIFIED EMERGENCY VENT
15	1	ACCESS PANEL	REMOVABLE DEF ACCESS PANEL

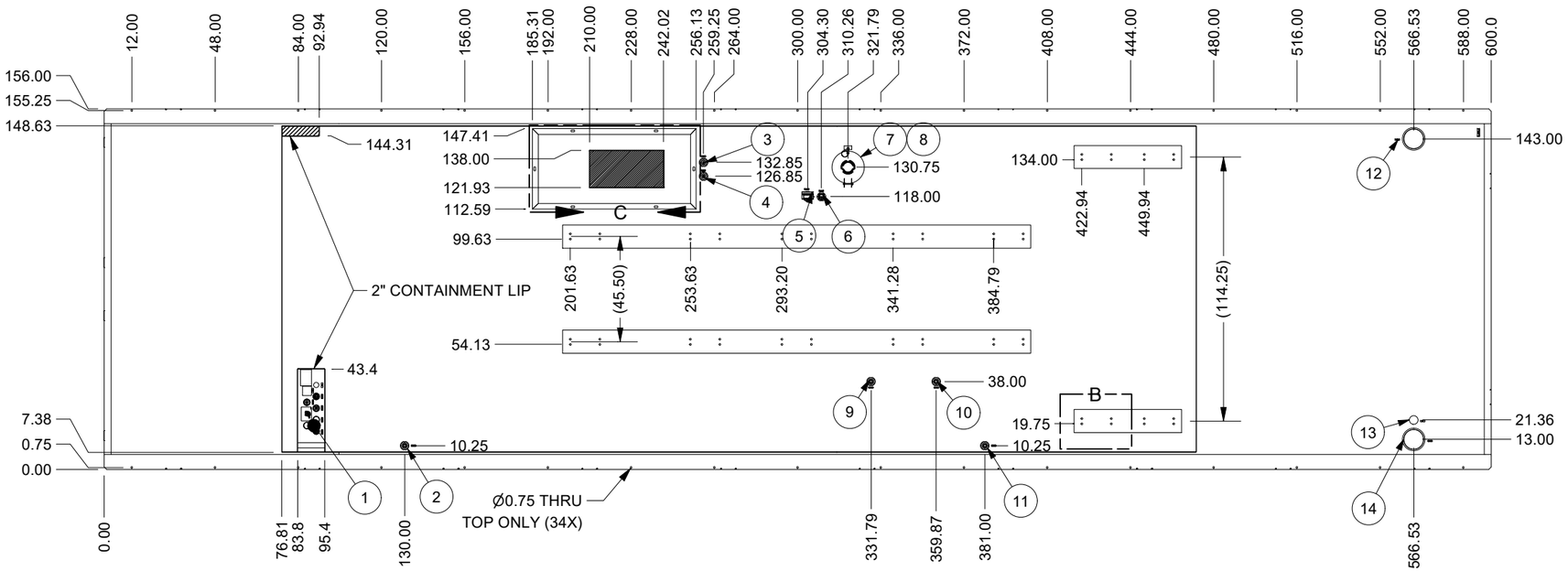

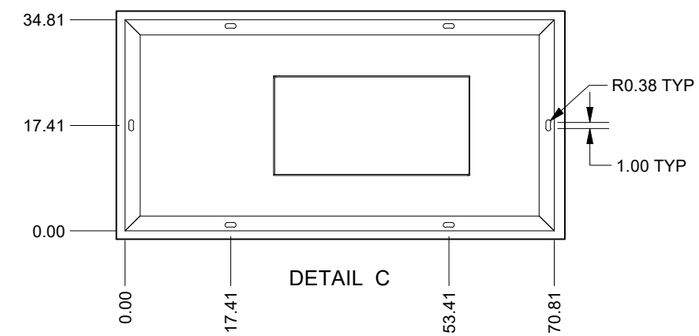

DETAIL C

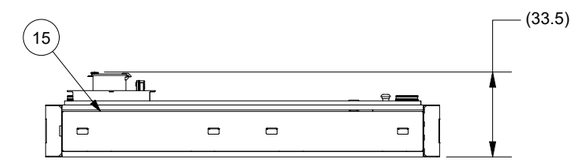

VIEW A-A
DEF SIDE ACCESS

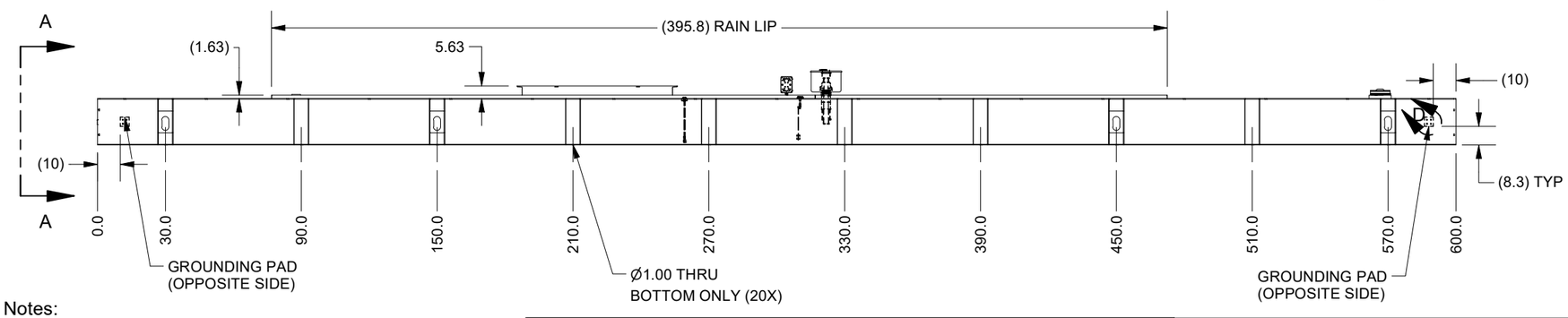

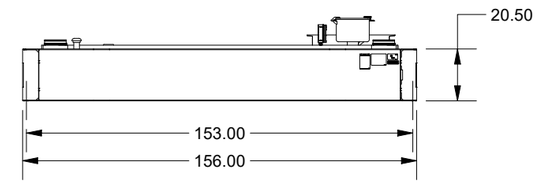

SHEET 1 OF 2

Notes:
1. Oil fog interior with Protecto Cote 150
2. Pressure test at 3 psi
3. Use diesel fuel resistant sealant on all threads
4. Affix UL 142, UA, and warning labels
5. All fittings to be plugged before paint
6. Powder coat black
7. Tank capacities
   Actual: 5374 gallons (20344 L)
   Usable: 5000 gallons (18926 L)
8. Tank weight approx. 22390 lbs ±10%
9. Tank is min 110% rupture basin containment

Customer has reviewed and approves fabrication drawing for accuracy, completeness and compliance with customer supplied design and specifications. This fabrication drawing serves as a contract addendum to

Quote # 133746 (CLOUD- 3 MEG)

CUSTOMER APPROVAL:

NAME: _____

DATE: _____

REVISION HISTORY

REV	DATE	DESCRIPTION	DESIGNER
A-4	12/04/24	ADD CAMLOCK FRAME, ADJUST STUBS	HMH
A-5	12/06/24	ADD POLISH PORTS	HMH
A-6	12/16/24	SHIFT PORTS OUTSIDE OF FRAME	HMH
B	03/07/25	ADJUST PORTS AND SHIFT DEF PORT STUB	HMH
B-1	03/26/25	ADD GROUNDING PADS	HMH

	INITIALS	DATE
DRAWN:	HMH	11/15/2024
CHECKED:		

TOLERANCES
EXCEPT AS NOTED
DECIMAL
.X ± .25
.XX ± .13
ANGULAR ±2°

UNITED ALLOY
Custom Metal Fabricated Products
4100 Kennedy Road Phone (608) 758-4717
Janesville, WI 53545 Fax (608) 758-1272

CONFIDENTIAL AND PROPRIETARY:
This document and the information contained herein are the property of United Alloy, Incorporated. They are to be used only for the purposes for which they are loaned, and this document is to be returned to United Alloy, Inc. immediately after serving such purpose. This document is not to be copied or reproduced without the written permission of United Alloy, Inc.

DESCRIPTION: TANK, 5000 GAL 600x156x20.5 UL142

REV B

DRAWING NO: TBC 133746-LH APPROVAL

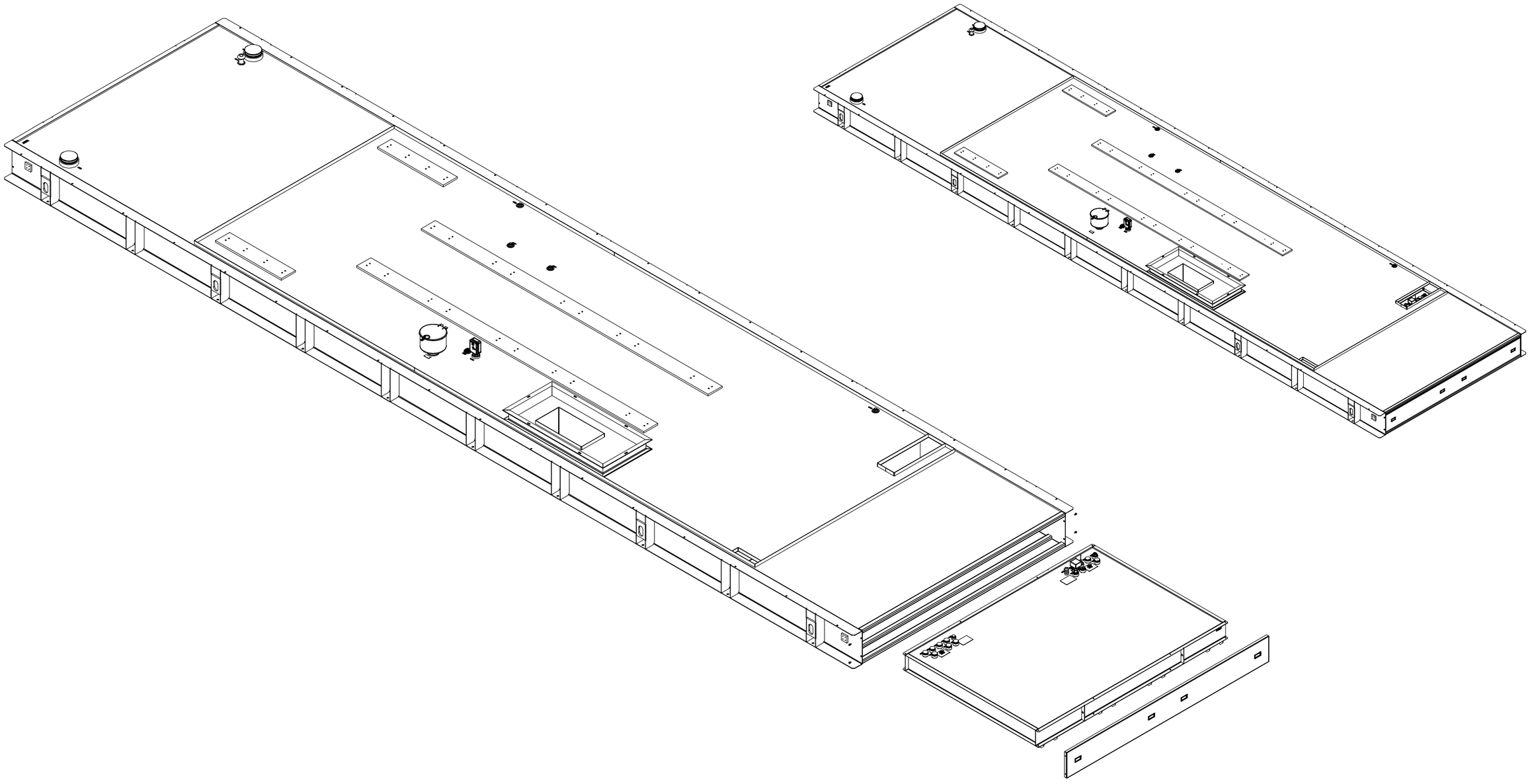

SHEET 2 OF 2

Notes:
1. Oil fog interior with Protecto Cote 150
2. Pressure test at 3 psi
3. Use diesel fuel resistant sealant on all threads
4. Affix UL 142, UA, and warning labels
5. All fittings to be plugged before paint
6. Powder coat black
7. Tank capacities
   Actual: 5374 gallons (20344 L)
   Usable: 5000 gallons (18926 L)
8. Tank weight approx. 22390 lbs ±10%
9. Tank is min 110% rupture basin containment

Customer has reviewed and approves fabrication drawing for accuracy, completeness and compliance with customer supplied design and specifications. This fabrication drawing serves as a contract addendum to

Quote # 133746 (CLOUD- 3 MEG)

CUSTOMER APPROVAL:

NAME: _____

DATE: _____

REVISION HISTORY

REV	DATE	DESCRIPTION	DESIGNER
A-4	12/04/24	ADD CAMLOCK FRAME, ADJUST STUBS	HMH
A-5	12/06/24	ADD POLISH PORTS	HMH
A-6	12/16/24	SHIFT PORTS OUTSIDE OF FRAME	HMH
B	03/07/25	ADJUST PORTS AND SHIFT DEF PORT STUB	HMH
B-1	03/26/25	ADD GROUNDING PADS	HMH

	INITIALS	DATE
DRAWN:	HMH	11/15/2024
CHECKED:		

TOLERANCES
EXCEPT AS NOTED

DECIMAL
.X ± .25
.XX ± .13
ANGULAR ±2°

UNITED ALLOY
Custom Metal Fabricated Products
4100 Kennedy Road Phone (608) 758-4717
Janesville, WI 53545 Fax (608) 758-1272

CONFIDENTIAL AND PROPRIETARY:
This document and the information contained herein are the property of United Alloy, Incorporated. They are to be used only for the purposes for which they are loaned, and this document is to be returned to United Alloy, Inc. immediately after serving such purpose. This document is not to be copied or reproduced without the written permission of United Alloy, Inc.

DESCRIPTION: TANK, 5000 GAL 600x156x20.5 UL142

REV B

DRAWING NO: TBC 133746-LH APPROVAL

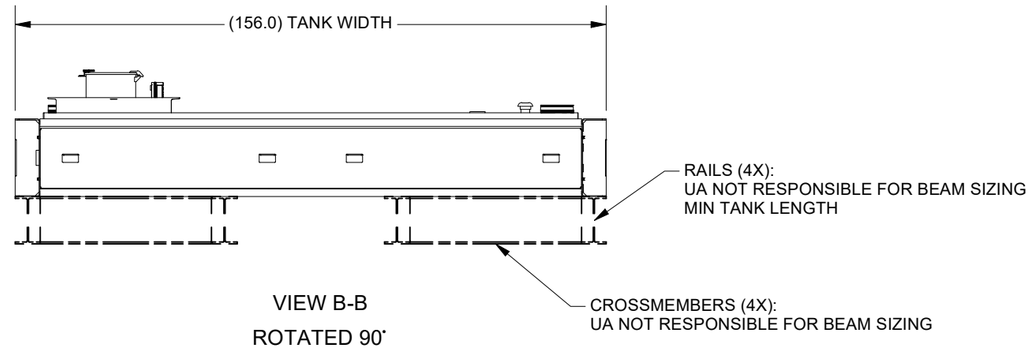

VIEW B-B
ROTATED 90˚

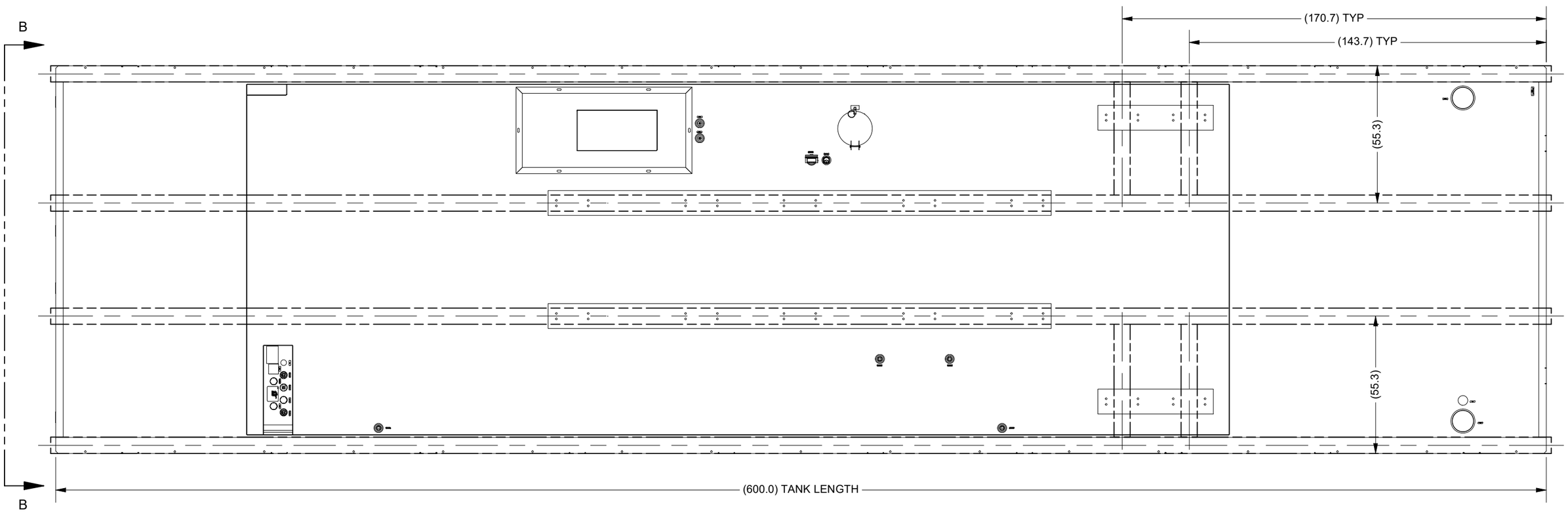

DISCLAIMER

Crane handling is the only approved method.

Any damage resulting from any other handling method is not covered within the product warranty.

Shown supports and locations are a recommendation only.

REVISION HISTORY

REV	DATE	DESCRIPTION	DESIGNER
B	03/26/25	INITIAL RELEASE	HMH

	INITIALS	DATE
DRAWN:	HMH	3/21/2025
CHECKED:		

TOLERANCES
EXCEPT AS NOTED
DECIMAL
.X ± .25
.XX ± .13
ANGULAR ±2°

UNITED ALLOY
Custom Metal Fabricated Products
4100 Kennedy Road Phone (608) 758-4717
Janesville, WI 53545 Fax (608) 758-1272

CONFIDENTIAL AND PROPRIETARY:
This document and the information contained herein are the property of United Alloy, Incorporated. They are to be used only for the purposes for which they are loaned, and this document is to be returned to United Alloy, Inc. immediately after serving such purpose. This document is not to be copied or reproduced without the written permission of United Alloy, Inc.

DESCRIPTION: TANK, 5000 GAL 600x156x20.5 UL142

DRAWING NO: TBC 133746-LH RIG SUPPORT 3

REV B

product information

6406 – GRT03307

T009-WH12 White 90 Gloss

Cardinal's 6406-GRT03307 T009-WH12 White 90 Gloss catalyzed with 67-ELHP aliphatic two-component polyurethane coating. This coating is well suited for exterior applications on both metal and plastic. This product was formulated to meet strict air quality regulations, while maintaining the application and performance benefits of a conventional polyurethane coating.

TYPICAL USES:

- Top coat for decorative and protective use on metal and plastic
- General metal finishing
- Electronic enclosures
- Trailers and vehicles
- Machinery

BENEFITS:

- Metal Rule 1107 Compliant VOC – 2.8 lbs/gal
- Very high gloss
- Excellent chemical and solvent resistance
- UL approved (phosphatized steel electronics enclosures)
- Available in a complete range of colors, glosses, textures and cardtex finishes
- RoHS / WEEE compliant

CURED FILM PROPERTIES:

Testing conducted on 6404 – GRT03307 S/G T009-WH12 White 90 Gloss catalyzed with 67-ELHP at 1.5 mils DFT (Dry Film Thickness) over 20 gauge Bonderite 1000® test=panels, cured 30 minutes at 180°F and air dried 14 days.

TEST	METHOD	PARAMETERS	RESULT
Adhesion	ASTM D3359	Cross-hatch tape	0% failure
Impact:	ASTM D2794	Direct Reverse	130 in. lbs. 60 in. lbs
Flexibility:	ASTM D1737	1/8" mandrel	No cracking
Hardness	ASTM D3363	Pencil	H - 2H
Abrasion	ASTM D4060	CS-17 wheels, 1 kg, 1000 cycles	Less than 100 mg loss
Humidity	ASTM D2247	168 hrs	No effect
Salt Spray	ASTM B117	1000 hrs 95°, 5% salt solution	Less than 3/16" creep - along scribe, otherwise, no effect
UV Light	ASTM G53	1000 hrs	90.3% gloss retention
Solvent Resistance	ASTM D4752	MEK 100 rubs IPA 200 rubs	No effect No effect
Chemical & Stain Resistance	ASTM D1308 30 min. spot A: No effect B: Slight dulling C: Moderate effect D: Discolored & softened	A – 0.1N HCl, 30 wt. motor oil, ammonia, butyl carbitol, butyl cellosolve, Cascade®, Clorox®, Coca Cola®, coffee, diethyl ether, Drano®, Fantastic®, fiber pen ink, floor stripper, gasoline, IPA, Ivory® Liquid, lanolin lotion, lemon juice, Snap®, Spic & Span®, tap water, vegetable oil, water base ink, WD-40®. B – ball point pen ink, carbon disulfide, correction fluid, Freon TF®, MEK, nail polish. C – chloroform. D – solvent base ink.	

FOR INDUSTRIAL USE ONLY

TYPE: Aliphatic polyester polyurethane.

COMPONENTS: Two.

COLOR: T009-WH12 White 90 Gloss

GLOSS: Semi-gloss (60 +/- 1 @ 60°)

COVERAGE: At 1.0 mil DFT, 65% transfer efficiency(TE)

Mixed paint, 2.75 lbs/gal : 552 ft^2/gal.

Calculation: 1604 ft2/gal x % volume solids x TE ÷ DFT

VOC MIXED: 360 grams/liter = 3.0 lbs/gal excluding
333 grams/liter = 2.75 lbs/gal including

VOLUME SOLIDS:

6406-GRT03307…….. 57%
67-ELHP…… 45%
Mixed to 2.75 lbs/gal ……. 53%

FLASH POINT: 24°F TCC

SHELF LIFE: 1 year from date of manufacture in factory sealed container.

APPLICATION: After preparing the surface, thoroughly mix component 1 before adding catalyst. Mix only the amount of material needed. The base to catalyst proportion must be measured accurately, by volume only, to obtain optimum film properties. Do not use reducers that contain water or alcohol; these react with the catalyst and can cause a variety of problems. Be aware of spray-able pot life. Brushing, rolling and dipping are not recommended.

APPLICATION CONDITIONS:

- Temperature – Apply coating within 55-100 F.
- Relative Humidity – Not recommended to apply in conditions greater than 85%.
- Substrate temperature – 5^0 above the dew point and a minimum of 55^0 F.

If coating is not applied within these conditions then the cured coating properties may not be representative.

MIX RATIOS: Two components must be mixed properly to obtain coating performance. Thinning depends on applicator's regulatory VOC limits.

Parts are by volume	MIX RATIO
6406-GRT03307	5
67-ELHP catalyst	1
1600-02 reducer	0

VISCOSITY: At 2.75 lbs/gal, most semi gloss colors will be in the 20"-40" #3 Zahn range.

SPRAY-able Pot Life: 2-3 hrs. at 2.75 lbs. VOC/gal

Note: If material is accelerated the actual pot life may vary depending on amount added.

RECOMMENDED DFT: 2.0 – 2.5 mils

CURE:	Air Dry	Force Dry *
Tack free	2 hrs.	1 hr at 120° F
Dry to handle	24 hrs.	30 min at 140° F
Dry hard	72 hrs.	15 min at 180° F

(At 1.5 mils dry film thickness, 78° F, 50% RH)

(Continued on page 2)

So. El Monte, CA 1329 Potrero Ave. 91733 (323) 283-9335 (626) 444-9274 Fax (626) 444-0382
www.cardinalpaint.com

NO WARRANTY EXPRESSED OR IMPLIED, ACCEPTABILITY TO BE DETERMINED BY USER, SPECIFICATIONS ARE SUBJECT TO CHANGE WITHOUT NOTICE

SURFACE PREPARATION AND PRIMING: The most important steps in a successful coating process are cleaning, pretreatment and priming. The following is a brief outline of some basics for unpainted substrates. It is not intended to be all-inclusive. For more information on your particular application contact Cardinal.

Cleaning the substrate: All surfaces to be coated, must be free of dirt, grease, oil, oxidation, mill scale, and all other contaminants. The surface must be thoroughly dry before painting. Air quality regulations have limited the allowable emissions from cleaning operations.

Steel — A phosphate chemical conversion coating is highly recommended. When this is not possible, a vinyl acid wash pretreatment primer is recommended such as Cardinal's 4860 series primers. UL approval on our product requires the minimum of a three stage iron phosphate pre-treatment.

Aluminum — A chemical conversion coating is highly recommended. When this is not possible, a vinyl acid wash pretreatment primer is recommended such as Cardinal's 4860 series primers.

Galvanized — Cardinal's W-303-A surface preparation solution helps improve adhesion followed by a vinyl acid wash pretreatment primer such as Cardinal's 4860 series primers.

Stainless Steel — Brush-off or blast clean per SSPC-SP 7 to a uniform profile of 1.5 mils. Cardinal's W-303-A surface preparation solution can help improve adhesion followed by a vinyl acid wash pretreatment primer such as Cardinal's 4860 series primers.

Plastic — All mold release should be completely removed. 6400 series polyurethane is compatible with a variety of plastics, however, since there are numerous different formulations of plastic, a trial sample should be painted and checked before running production. If 6400 attacks or weakens the plastic, a barrier coat of 3777-1 clear waterborne acrylic enamel may help.

PRIMER SELECTION:

PRODUCT NO.	DESCRIPTION	FUNCTION
6460-4702	Polyurethane Gray	Corrosion resistance, some surfacing
7760-4702	Epoxy Gray	Corrosion resistance, chemical resistance
7063-4702	Epoxy Gray	Corrosion resistance, chemical resistance and high build
3777-1	Waterborne Acrylic Clear	Barrier coat for some plastics

RELATED PRODUCTS:

PRODUCT NO.	DESCRIPTION
1600 Series Reducers	Thinners. Urethane grade. 1600-01, fast; 1600-02, medium; 1600-03, slow.
EL-005	Accelerator. Speeds up dry time (and shortens pot life).
J-3081	Surfactant. Helps eliminate blisters, bubbles, pin holes, solvent-pop.
P-5033	Surfactant. Helps eliminate craters and fish-eyes.

TROUBLE SHOOTING:

PROBLEM	CAUSE	REMEDY
Blisters, pin holes or solvent pop	Water contamination. Entrapped air. Entrapped solvent	Eliminate water – Check air lines. Use fresh catalyst. Use urethane grade thinners. Increase atomization, decrease film build.
Craters	Contaminated ambient air, e.g., silicone mist, dust.	Locate and eliminate source of contamination.
Fish-eyes	Substrate contamination.	Clean and prepare substrate.
Not drying	Alcohol in reducer. Wrong catalyst ratio.	Use Cardinal's 1600 series or urethane grade reducers only. Double check mix ratio.
Poor adhesion	Improper surface preparation.	See surface preparation section.
Gloss variation	Variation in application, cure schedule, catalyst ratio, humidity.	Consistent gloss depends upon consistent process.

PRODUCT IDENTIFICATION

6 4 0 6 – G R T 0 3 3 0 7 (example)

- Color number
- Gloss: 0 = flat; 1 = 10°; 2 = 20° . . . etc.; 70° - 90°+ = high gloss
- Special: e.g., 2 = metallic; 3 = cardtex; 4 = texture; 6 = primer; 7 = clear
- Product type

* Some Air quality regulations require a maximum temp. of 194° F to qualify as an "air dry" system which generally have higher VOC limits than baking systems.

APPLICATION EQUIPMENT: Most air quality regulations require the paint application transfer efficiency to be 65% or better. This generally means using electrostatic or high volume low pressure (HVLP) spray guns. Otherwise, conventional pressure feed, airless or air assisted airless spray equipment can be used. Air supply lines need water and oil traps.

EQUIPMENT CLEAN-UP: Clean up should be done as soon as possible keeping in mind the pot life of the mixed paint. Avoid leaving catalyzed paint in the lines. Air quality regulations have limited the allowable emissions from cleaning operations.

PRODUCT LIMITATIONS:

- Catalyst reacts with water. Air supply should be dry. Containers should be kept tightly closed. Use urethane grade thinners only.
- Alcohols and glycols interfere with curing chemistry and should be avoided. They can be found in some lacquer thinners and certain synthetic reducers.
- Optimum film properties are dependent upon proper mixing of paint and catalyst.

SAFETY: Refer to the product's Safety Data Sheet (SDS) for complete safety information. Contains organic solvents. Use with adequate ventilation. Do not breathe vapors or spray mists. If component TLVs are exceeded, a NIOSH approved air supplied respirator is advised. See SDS for TLV information. Contents are FLAMMABLE. Keep from heat, sparks or open flame. Allergic reactions are possible. Avoid use by persons with respiratory problems. Avoid contact with eyes, skin, and clothing. Wash thoroughly after handling.

FIRST AID:

Eye contact: flush immediately with plenty of water for at least 15 min. and get medical attention. Skin contact: wash thoroughly with soap and water for 5 minutes. If swallowed, do not induce vomiting and get medical attention immediately.

A25JEP

IMPORTANT: Warranty and Disclaimer — The performance characteristics of these products vary according to product application, operating conditions, materials applied to or with and use. Since these factors can affect results, we strongly recommend that you make your own test to determine to your satisfaction whether the product is of acceptable quality, has not been affected by storage or transport and is suitable for your particular purpose under your own operation conditions prior to using any product in full scale production. Seller warrants the products to be free from defects in materials and workmanship. SUCH WARRANTY IS EXCLUSIVE AND IS IN LIEU OF ANY OTHER WARRANTY, EXPRESSED OR IMPLIED, INCLUDING, BUT NOT LIMITED TO, ANY IMPLIED WARRANTY OF MERCHANTABILITY OF FITNESS FOR A PARTICULAR PURPOSE. No representative of ours has authority to waive or change this provision, which applies to all sales of these products.