DOCKETED	
Docket Number:	09-AFC-08C
Project Title:	Genesis Solar Energy Project
TN #:	270588
Document Title:	09-AFC-08-Genesis Parking Structure PTA
Description:	N/A
Filer:	Cynthia Keller
Organization:	NexteraEnergy Resources
Submitter Role:	Applicant
Submission Date:	6/12/2026 9:13:45 AM
Docketed Date:	6/12/2026

Genesis Solar, LLC

(9-AFC-8)

Petition to Amend

Submitted by

Genesis Solar,LLC

April 2026

Table of Contents

Genesis Solar (9-AFC-8) Petition to Amend Title Page 1
1.0 Executitve Summary 5
1.1 Overview 5
1.2 Ownership of Genesis Solar, LLC 7
1.3 Summary of Environmental Impacts 7
2.0 Description of Project Changes 8
2.1 Changes to Condition of Certification 8
2.2 Necessity of Proposed Changes 8
3.0 Environmental Analysis of Proposed Project Changes and Consistency with LORS 9
3.3 Consistency of Amendment with the Certification and LORS 9
4.0 Potential Effects on the Public 10
5.0 List of Property Owners and Potential Effects on Property Owners 11
5.1 List of Property Owners 11
5.2 Potential Effects on Property Owners 11
6.0 Included Drawings 12

Executive Summary

Genesis Solar, LLC as project owner, petitions the California Energy Commission (CEC or Commission) to comply with the Condition of Certification Compliance-13, Gen-1 and Gen-8 regarding the manner of regulation of new construction at the Genesis Solar Facility. Genesis Solar, LLC proposes to construct a Heavy Equipment Covered Parking Structure. The structure will create permanent, open-air shade for parking of heavy equipment. The structure would be constructed of steel with concrete foundations. The structure would be sited on the area currently used for mobile equipment parking (e.g. front loader, tractor, man lift, telescopic fork lift, all terrain crane, and similar).

Per the CEC Condition of certification, this compliance proposal is being submitted for approval due to the following condition decisions.

COMPLIANCE-13

The project owner must petition the Energy Commission pursuant to Title 20, California code of Regulations section 1769, in order to modify the project (including linear facilities) design, operation or performance requirements, and to transfer ownership or operational control of the facility. It is the responsibility of the project owner to contact the CPM to determine if a proposed project change should be considered a project modification pursuant of section 1769. Implementation of a project modification without first securing Energy Commission, or Energy Commission staff approval, may result in enforcement action that could result in civil penalties in accordance with section 25534 of the Public Resources Code.

A petition is required for amendments and for staff approved project modifications as specified below. Both shall be filed as a "Petition to Amend." Staff will determine if the change is significant or insignificant. For verification changes, a letter from the project owner is sufficient. In all cases, the petition or letter requesting a change should be submitted to the CPM, who will file it with the Energy Commission's Dockets Unit in accordance with Title 20, California Code of Regulations, section 1209.

GEN-1

The project owner shall design, construct, and inspect the project in accordance with the 2007 California Building Standards Code (CBSC), also known as Title 24, California Code of Regulations, which encompasses the California Building Code (CBC), California Building Standards Administrative Code, California Electrical Code, California Mechanical Code, California Plumbing Code, California Energy Code, California Fire Code, California Code for Building Conservation, California Reference Standards Code, and all other applicable engineering LORS in effect at the time initial design plans are submitted to the CBO for review and approval (the CBSC in effect is the edition that has been adopted by the California Building Standards Commission and published at least 180 days previously). The project owner shall ensure that all the provisions of the above applicable codes are enforced during the construction, addition, alteration, moving, demolition, repair, or maintenance of the completed facility. All transmission facilities (lines, switchyards, switching stations and substations) are covered in the conditions of certification in the Transmission System Engineering section of this document. In the event that the initial engineering designs are submitted to the CBO when the successor to the 2007 CBSC is in effect, the 2007 CBSC provisions shall be replaced with the applicable successor provisions. Where, in any specific case, different sections of the code specify different materials, methods of construction or other requirements, the most restrictive shall govern. Where there is a conflict

between a general requirement and a specific requirement, the specific requirement shall govern. The project owner shall ensure that all contracts with contractors, subcontractors, and suppliers clearly specify that all work performed and materials supplied comply with the codes listed above.

GEN-8

The project owner shall obtain the CBO's final approval of all completed work that has undergone CBO design review and approval. The project owner shall request the CBO to inspect the completed structure and review the submitted documents. The project owner shall notify the CPM after obtaining the CBO's final approval. The project owner shall retain one set of approved engineering plans, specifications, and calculations (including all approved changes) at the project site or at another accessible location during the operating life of the project. Electronic copies of the approved plans, specifications, calculations, and marked-up as-builts shall be provided to the CBO for retention by the CPM.

1.0 Introduction

1.1 Overview

By this amendment Genesis Solar, LLC, petitions the Commission to consider the stated Condition of Certification to add a Heavy Equipment Covered Parking Structure.

The Heavy Equipment Covered Parking Structure:

Consists of a red-iron steel structure, I-beam construction with light weight deck material. Supported by 24 concrete foundations, one per vertical support member. Structure to be painted tan, consistent with coloring of existing structures nearby.

Approximate dimensions: Total width of 200' consisting of 8 low bays and 2 high bays. Low bays 12' high x 12' deep. High bays 20' high x 40' deep. See included drawings for details.

The Structure to be located in an open area currently being used for equipment parking. Location is east of the Administration Building and Warehouse, north of Water Treatment facility area (see drawings).

All engineering and construction to be performed by an outside contractor.

This Amendment contains all of the information that is required pursuant to the Siting Regulations (California Code of Regulations [CCR] Title 20, Section 1769, Post Certification Amendments and Changes). The information necessary to fulfill the requirements of Section 1769(a)(1) is contained in Sections 1.0 through 5.0 as summarized in Table 1 below.

TABLE 1

Informational Requirements for Post-Certification Amendments and Changes in accordance with Title 20 California Code of Regulations

Section 1769(a)(1) Requirement	Section of Petition Fulfilling Requirement
(A) A complete description of the proposed modifications, including new language for any conditions that will be affected.	2.0
(B) A discussion of the necessity for the proposed changes	2.2
(C) If the modification is based on information that was known by the petitioner during the certification proceeding, an explanation why the issue was not raised at that time	2.2
(D) If the modification is based on new information that changes or undermines the assumptions, rationale, findings, or other bases of the final decision, an explanation of why the change should be permitted	2.2
(E) An analysis of the impacts the modification may have on the environment and proposed measures to mitigate any significant adverse impacts	1.3
(F) A discussion of the impact of the modification on the facility's ability to comply with applicable laws, ordinances, regulations, and standards;	1.3
(G) A discussion of how the modification affects the public	4.0
(H) A list of property owners potentially affected by the modification.	5.1
(I) A discussion of the potential effect on nearby property owners, the public and the parties in the application proceedings.	5.2

1.2 Ownership of Genesis Solar, LLC

Genesis Solar, LLC is a wholly owned subsidiary of NextEra Energy Resources.

1.3 Summary of Environmental Impacts

The Siting Regulations require that an analysis be conducted to address the potential impacts the proposed project change may have on the environment and proposed measures to mitigate any potentially significant adverse impacts (Title 20, CCR, Section 1769 (a)(1)(E)). The regulations also require a discussion of the impact of the proposed change on the facility's ability to comply with applicable laws, ordinances, regulations and standards ("LORS") (Title 20, CCR Section 1769 (a)(1)(F)).

Section 3.0 of this Amendment includes a discussion of the potential environmental impacts associated with the proposed additions and a discussion of the consistency of the change with LORS. Section 3.0 concludes that there would be no significant environmental impacts associated with implementing the construction of a Heavy Equipment Covered Parking Structure specified in this Amendment and that the project would continue to comply with all applicable LORS.

The proposed changes to the site will not adversely impact the environment.

2.0 Description of Project Changes

This section includes a complete description of the proposed modification consistent with the Siting Regulations (Title 20, CCR, Section 1769 (a)(1)(A)).

The proposed Heavy Equipment Covered Parking Structure consists of a red-iron steel structure of I-beam construction with light weight deck material. It shall be supported by 24 concrete foundations, one per vertical support member. Structure to be painted tan. Approximate dimensions: Total width of 200' consisting of 8 low bays and 2 high bays. Low bays 12' high x 12' deep. High bays 20' high x 40' deep (see drawings). The Structure to be located in an open area currently being used for equipment parking. Location is east of the Administration Building and Warehouse, north of Water Treatment facility area (see drawings). All engineering and construction to be performed by qualified contractors.

2.1 Changes to Condition of Certification

By way of background, the Decision for the Genesis Solar facility describes in GEN-1 any alterations or additions will be presented to the CPM 30 days before commencement of work.

"Once the certificate of occupancy has been issued, the project owner shall inform the CPM at least 30 days prior to any construction, addition, alteration, moving, demolition, repair, or maintenance to be performed on any portion(s) of the completed facility that requires CBO approval for compliance with the above codes. The CPM will then determine if the CBO needs to approve the work." (Decision, pg. 4)

The original Condition of Certification to the Decision will not be affected by the addition of the Heavy Equipment Covered Parking Structure. The Structure will be constructed to CBO specifications and inspected by the CBO as required. (Decision p.2)

Additionally, the implementation of the proposed Heavy Equipment Covered Parking Structure will not adversely affect the Conditions of Certification listed to ensure that the Genesis Solar Energy Project will be designed and constructed in conformance with the applicable LORS pertinent to the engineering aspects summarized in the Decision. (Decision, p. 3)

2.2 Necessity of Proposed Changes

The Siting Regulations require a discussion of the necessity for the proposed modification to GEN-1 and GEN-8 and whether the change is based on information known by the petitioner during the certification proceeding (Title 20, CCR, Sections 1769 (a)(1)(B), and (C)).

As described in Section 2.1 above, structural changes to the site does not change the decision as it is stated in GEN-1 and GEN-8. At the time of original approval, the project owner did not consider the need for a Heavy Equipment Covered Parking Structure. The extreme weather conditions at Genesis Solar have given rise to concerns of mobile heavy equipment deterioration. Genesis Solar, LLC proposes to build a Heavy Equipment Covered Parking Structure to protect the integrity of this necessary equipment.

3.0 Environmental Analysis of Proposed Project Changes and Consistency with LORS

The Amendment does not change the design or operation of the plant equipment. Accordingly, the proposed addition to the plant does not modify GEN-1 or GEN-8 and will not result in any significant adverse environmental impact.

The proposed change has no possible potential impact on the following environmental disciplines: Biological Resources, Cultural Resources, Geology and Paleontology, Hazardous Materials Management, Land Use, Noise and Vibration, Socioeconomics, Soil and Water Resources, Traffic and Transportation, Waste Management, and Worker Safety and Fire Protection.

3.1 Air Quality

The proposed changes that incorporate GEN-1 and GEN-8 will not cause any change to air quality.

3.2 Impact to Public Health

The proposed changes that incorporate GEN-1 and GEN-8 will have no effect on public health. Genesis Solar is well outside of the city of Blythe and approximately 11 miles from the I-10 Wiley's Well Road rest area. There are no neighbors near the facility and no threat to outside public residences.

3.3 Consistency of Amendment with the Certification and LORS

The Siting Regulations require a discussion of the consistency of the proposed project revisions with the applicable laws, ordinances, regulations, and standards (LORS) and whether the modifications are based upon new information that changes or undermines the assumptions, rationale, findings, or other bases of the final decision (Title 14, CCR Section 1769 (a)(1)(D)). If the project is no longer consistent with the certification, the petition for project change must provide an explanation for why the modification should be permitted.

This Amendment is consistent with all applicable LORS and is not based on new information that changes or undermines any bases for the Decision. The findings and conclusions contained in the Decision for the project are still applicable to the project as modified.

4.0 Potential Effects on the Public

This section discusses the potential effects on the public that may result from the modification proposed in this request for approval, per the Siting Regulations (Title 20, CCR, Section 1769(a) (1) (G)).

The proposed changes will not affect the public. There are no residential homes, hospitals or schools within a 20-mile radius of the plant.

5.0 List of Property Owners and Potential Effects on Property Owners

5.1 List of Property Owners

In accordance with the Siting Regulations (Title 20, CCR, Section 1769(a)(1)(H)), the project owner will provide the Compliance Project Manager for the project a list of all property owners whose property is located within 500 feet of the project.

There are no property owners within 500 feet of the project.

5.2 Potential Effects on Property Owners

This section addresses potential effects of the modification proposed in this Amendment on nearby property owners, the public, and parties in the application proceeding, per the Siting Regulations (Title 20, CCR, Section 1769 (a)(1)(I)).

There are no property owners within 500 feet of the project.

6.0 Included Drawings

1) T1.0 - Lead Sheet_Heavy Equipment Co
2) S-0.0 - General Notes
3) S-0.1 - General Notes Continued
4) S-1 - Foundation and Roof Framing Plan
5) S-2 - Structural Sections A and B
6) SD-1 - Foundation Details
7) SD-2 - Framing Details
8) SD-3 - Framing Details
9) Structural Calculations

Conceptual Elevation View, Heavy Equipment Covered Parking Structure

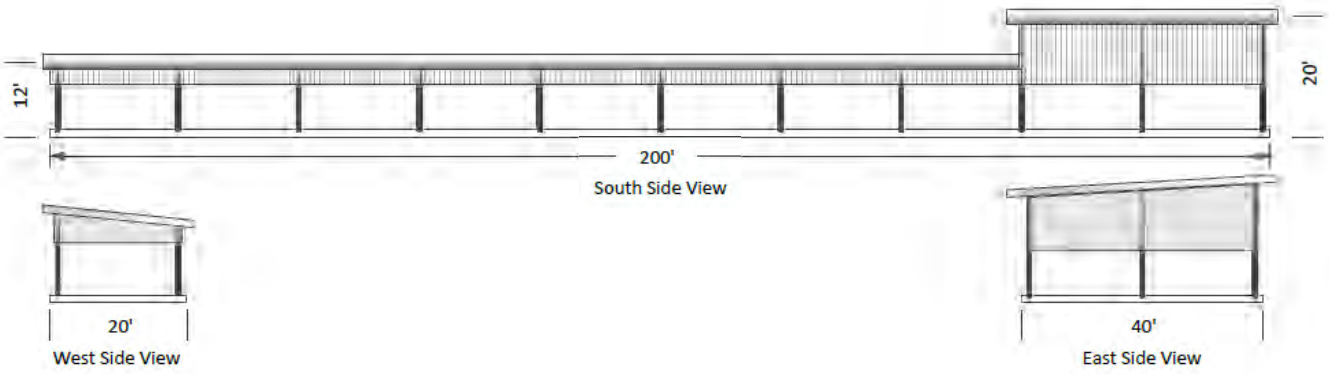

GENESIS SOLAR LLC

HEAVY EQUIPMENT COVERED PARKING

SGN-7209

11995 WILEY'S WELL ROAD
BLYTHE, CALIFORNIA 92225

SCOPE OF WORK STATEMENT:

THESE IMPROVEMENTS CONSIST OF THE FOLLOWING WORK TO BE DONE ACCORDING TO THESE PLANS AND SPECIFICATIONS: PROVIDE NEW COVERED PARKING AREA FOR EQUIPMENT.

PROJECT ADDRESS:

SGN-7209
11995 WILEY'S WELL ROAD
BLYTHE, CALIFORNIA 92225

OWNER

GENESIS SOLAR LLC

700 UNIVERSE BLVD
JUPITER, FL 33408
TELEPHONE: (760) 921-1411

ENGINEERING CONTACTS

DESERT ENGINEERS
75401 PAINTED DESERT DRIVE
INDIAN WELLS, CALIFORNIA 92210
(760) 568-9600

STRUCTURAL ENGINEER - TAIWON KIM, PE

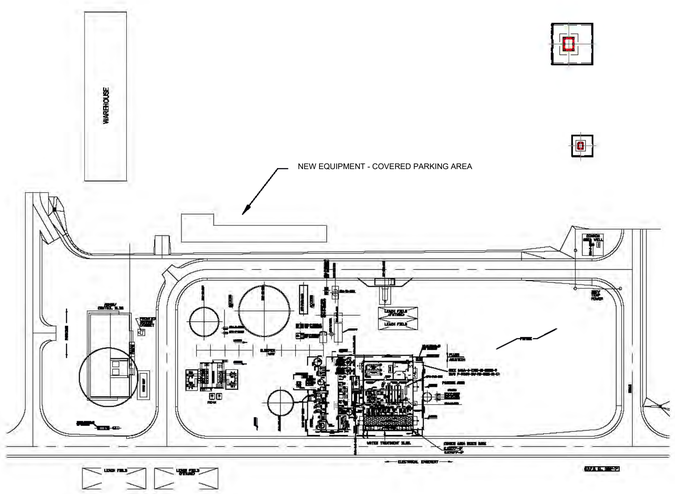

SITE/FACILITY PLAN
NO SCALE

VICINITY MAP
NO SCALE

SHEET INDEX

T-1.0	PROJECT TITLE COVER SHEET
S-0.0	GENERAL NOTES
S-0.1	GENERAL NOTES
S-1	ROOF FRAMING PLAN
S-2	SECTIONS
SD-1	FOUNDATION DETAILS
SD-2	FOUNDATION DETAILS
SD-3	FRAMING DETAILS

APPLICABLE CODES

THE WORK SHOWN ON THESE DRAWINGS SHALL BE USED FOR CONSTRUCTION.

APPLICABLE CODES:
- 2022 CALIFORNIA BUILDING CODE (CBC)
- 2022 CALIFORNIA ELECTRICAL CODE (CEC)
- 2022 CALIFORNIA MECHANICAL CODE (CMC)
- 2022 CALIFORNIA PLUMBING CODE (CPC)
- 2022 CALIFORNIA FIRE CODE

NO.#	REMARKS	DATE

REGISTERED PROFESSIONAL ENGINEER
TAIWON KIM
M21082
Exp. 6/27
STRUCTURAL
09/28/25

DESERT ENGINEERS
CONSULTING ENGINEERS
MECHANICAL, ELECTRICAL, PLUMBING AND STRUCTURAL DESIGN
760 / 568 / 9600
http://DESERTENGINEERS.COM

HEAVY EQUIPMENT COVERED PARKING
GENESIS SOLAR SGN-7209
11995 Wiley's Well Road
Blythe, CA. 92225

DRAWN BY:	
DATE	09/28/25
SCALE	
JOB NO.	
SHEET	T-1.0
OF	SHEETS

GENERAL NOTES

1. ALL CONSTRUCTION SHALL CONFORM TO THE 2022 CALIFORNIA BUILDING CODE UNLESS MORE STRENGTHEN REQUIREMENTS ARE REQUIRED IN THE PLANS AND SPECIFICATIONS.
2. THE CONTRACTOR SHALL VERIFY AND BE RESPONSIBLE FOR VERIFYING ALL DIMENSIONS AND CONDITIONS AT THE SITE. BEFORE FINAL BIDDING AND/OR DURING CONSTRUCTION, THE CONTRACTOR SHALL NOTIFY THE ENGINEER OF ANY DISCREPANCIES BETWEEN THE PLANS AND THE CONDITIONS AT THE SITE. THE ARCHITECT AND ENGINEER SHALL BE NOTIFIED IMMEDIATELY IF DISCREPANCIES ARE FOUND.
3. THERE SHALL BE NO DEVIATION FROM THE PLANS, NOTES, AND SPECIFICATIONS WITHOUT THE WRITTEN APPROVAL OF THE ENGINEER.
4. WHERE CONSTRUCTION DETAILS ARE NOT SHOWN OR NOTED FOR ANY PART OF THE WORK, SUCH DETAILS SHALL BE THE SAME AS FOR SIMILAR WORK SHOWN ON THE DRAWINGS. ALL SYMBOLS AND ABBREVIATIONS USED ON THE DRAWINGS ARE CONSIDERED TO BE CONSTRUCTION STANDARDS. IF CLARIFICATION IS REQUIRED, THE CONTRACTOR SHALL NOTIFY THE ENGINEER PIOR TO PROCEEDING WITH THE WORK.
5. THESE NOTES, DETAILS, DRAWINGS AND SPECIFICATIONS (CONTRACT DOCUMENTS) REPRESENT THE FINISHED STRUCTURE, AND DO NOT INDICATE THE METHOD OF CONSTRUCTION. THE CONTRACTOR SHALL SUPERVISE AND DIRECT THE WORK AND SHALL BE SOLELY RESPONSIBLE FOR CONSTRUCTION MEANS, METHODS, TECHNIQUES, SEQUENCES AND PROCEDURES.
6. LOCATE AND PROTECT UNDERGROUND OR CONCEALED CONDUIT, PLUMBING OR OTHER UTILITIES WHERE NEW WORK IS BEING PERFORMED. A PERMIT FROM CALIFORNIA DIVISION OF THE INDUSTRIAL SAFETY (CAL OSHA) IS REQUIRED FOR ANY EXCAVATION GREATER THAN 5' (FIVE FEET) IN DEPTH TO THE BOTTOM OF EXCAVATION AND FOR DEMOLITION OF BUILDINGS OVER THREE STORIES OR 36 FEET IN HEIGHT.
7. THE CONTRACTOR SHALL TAKE ALL STEPS NECESSARY TO ENSURE PROPER ALIGNMENT OF THE STRUCTURE AFTER THE INSTALLATION OF ALL STRUCTURAL AND FINISH MATERIALS. THIS SHALL INCLUDE ANY NECESSARY PRE-LOADING OF THE STRUCTURE TO DETERMINE FINAL POSITION OF THE COMPLETED WORK.
8. CONTRACTOR SHALL PROVIDE SHOP DRAWING TO ENGINEER AND CHECKED BY ENGINEER ABOUT STEEL, CONCRETE AND NECESSARY STRUCTURE PRIOR TO COMMENCING WITH THE CONSTRUCTION.
9. THE CONTRACTOR SHALL HAVE A COPY OF THE PROJECTS SOILS/GEOTECHNICAL/CONDITION INVESTIGATIONS (IF ANY) ON THE JOB SITE AT ALL TIMES. THESE REPORTS SHALL REPORTS SHALL BE CONSIDERED AS A PART OF THESE PLANS AND THE CONTRACTOR SHALL INCORPORATE ALL RECOMMENDATIONS/REQUIREMENTS OF SAID REPORTS INTO THE CONSTRUCTION OF THIS PROJECT.
10. ONLY "BUILDING DEPARTMENT APPROVED" STRUCTURAL WORKING DRAWINGS (AND ALL OTHER CONSTRUCTION DOCUMENTS) ARE PERMITTED TO BE USED FOR CONSTRUCTION ON THIS PROJECT. ALL OTHER DRAWINGS ARE OBSOLETE AND ARE NOT PERMITTED ON THE JOB SITE, NOR SHALL THEY BE USED FOR ANY CONSTRUCTION PURPOSES (INCLUDING THE CALCULATION OF ALL FINAL ESTIMATES AND BIDS.) ANY CONTRACTOR USING UNAPPROVED DRAWINGS WILL BE HELD SOLELY RESPONSIBLE FOR ALL WORK NOT PERFORMED IN ACCORDANCE WITH THE "APPROVED" DRAWINGS.
11. THESE PLANS REPRESENT THE STRUCTURAL DESIGN ONLY. NO INFORMATION NOR WARRANTY IS PROVIDED FOR ARCHITECTURAL INFORMATION INCLUDING BUT NOT LIMITED TO. WATERPROOFING DETAILS , DRAINAGE, VENTILATION OF FRAMING AND ARCHITECTURAL DIMENSIONS.
12. STRUCTURAL OBSERVATION: WHEN THE ENGINEER OF RECORD IS REQUIRED TO PERFORM STRUCTURAL OBSERVATIONS IN THE FIELD DURING CONSTRUCTION. (SEE STRUCTURAL OBSERVATION NOTES) THE FIELD SHALL NOTIFY THE ENGINEER OF RECORD AT LEAST 48 HOURS IN ADVANCE OF THE REQUIRED STRUCTURAL OBSERVATION. CITY INSPECTION SHALL BE SCHEDULED ONE DAY AFTER ENGINEER'S STRUCTURAL OBSERVATION.
13. THE CONTRACTOR IS RESPONSIBLE FOR THE MEANS AND METHODS OF CONSTRUCTION AND ALL JOB RELATED SAFETY STANDARDS SUCH AS "CAL OSHA". THE CONTRACTOR IS RESPONSIBLE FOR THE STRENGTH AND STABILITY OF THE STRUCTURE DURING CONSTRUCTION AND SHALL PROVIDE TEMPORARY SHORING, BRACING AND OTHER ELEMENTS REQUIRED TO MAINTAIN STABILITY UNTIL THE STRUCTURE IS COMPLETED. IT IS CONTRACTOR'S RESPONSIBILITY TO BE FAMILIAR WITH THE WORK REQUIRED IN THE CONSTRUCTION DOCUMENTS AND THE REQUIREMENTS FOR EXECUTING IT PROPERLY.
14. EACH CONTRACTOR OR SUB-CONTRACTOR RESPONSIBLE FOR THE CONSTRUCTION OF THE WIND AND/OR SEISMIC RESISTING SYSTEM THAT IS LISTED IN THE STATEMENT OF SPECIAL INSPECTIONS SHALL SUBMIT A WRITTEN STATEMENT OF RESPONSIBILITY TO THE BUILDING OFFICIAL AND THE OWNER PRIOR TO THE COMMENCEMENT OF WORK REQUIRING SPECIAL INSPECTION. THE CONTRACTOR'S STATEMENT OF RESPONSIBILITY SHALL CONTAIN ACKNOWLEDGEMENT OF AWARENESS OF THE SPECIAL REQUIREMENTS CONTAINED IN THE STATEMENT OF SPECIAL INSPECTIONS.
15. LOADS ON THE STRUCTURE DURING CONSTRUCTION SHALL NOT EXCEED THE DESIGN LOADS OR THE CAPACITY OF THE PARTIALLY COMPLETED CONSTRUCTION.
16. ALL CONSTRUCTION IS SUBJECT TO INSPECTION BY THE BUILDING OFFICIAL. THE CONTRACTOR SHALL COORDINATE ALL REQUIRED INSPECTIONS WITH THE BUILDING OFFICIAL SUBMIT COPIES OF ALL INSPECTION REPORTS TO THE ENGINEER FOR REVIEW.
17. PIPES, DUCTS, SLEEVES, CHASES SHALL NOT BE PLACED IN SLABS, BEAMS, OR WALLS UNLESS SPECIFICALLY SHOWN OR NOTED NOR SHALL ANY STRUCTURAL MEMBER BE CUT FOR PIPES, DUCTS, ETC.

DESIGN LOAD CRITERIA

SEISMIC DESIGN CRITERIA	
SEISMIC IMPORTANT FACTOR, I	1.0
RISK CATEGORY	II
MAPPED SPECTRAL RESPONSE ACCELERATIONS	S_S = 0.406
	S_1 = 0.19
SITE CLASS	D
SPECTRAL RESPONSE COEFFICIENTS	S_{DS} = 0.399
	S_{D1} = 0.281
SEISMIC DESIGN CATEGORY	D
BASIC SEISMIC-FORCE-RESISTING SYSTEM(S)	LIGHT-FRAME(WOOD)WALLS SHEATED WITH WOOD STRUCTURAL PANELS
SEISMIC RESPONSE COEFFICIENT(S), C_S	0.11
RESPONSE MODIFICATION FACTOR(S), R	6.5
ANALYSIS PROCEDURE USED	EQUIVALENT LATERAL FORCE PROCEDURE(CH12.8)
REDUNDANCY FACTOR USED	1.3

GRAVITY DESIGN CRITERIA	
ROOF LIVE LOAD, LL	20 PSF
FLOOR LIVE LOAD, LL	40 PSF
CEILING LIVE LOAD, LL	20 PSF

WIND DESIGN CRITERIA	
DESIGN WIND SPEED	100MPH
RISK CATEGORY	II
WIND EXPOSURE	B

ADDITIONAL NOTE (PER BUILDING DEPARTMENT)

1. CONTRACTORS RESPONSIBLE FOR THE CONSTRUCTION OF A WIND OR SEISMIC FORCE RESISTING SYSTEM/COMPONENT LISTED IN THE STATEMENT OF SPECIAL INSPECTION SHALL SUBMIT A WRITTEN STATEMENT OF RESPONSIBILITY TO THE LADBS INSPECTORS AND THE OWNER PRIOR TO THE COMMENCEMENT OF WORK ON SUCH SYSTEM OR COMPONENT PER SEC 1704.4.
2. CONTINUOUS SPECIAL INSPECTION BY A REGISTERED DEPUTY INSPECTOR IS REQUIRED FOR FIELD WELDING, POST-INSTALLED ADHESIVE ANCHORS INSTALLED HORIZONTALLY OR UPWARDLY INCLINED TO RESIST SUSTAINED TENSION LOADS, SHOTCRETE PLACEMENT, CONCRETE STRENGTH F=C > 2500 PSI, SPRAYED-ON FIREPROOFING, ENGINEERED MASONRY, HIGH-LIFT GROUTING, HIGH LOAD DIAPHRAGMS, SPECIALMOMENT-RESISTING CONCRETE FRAMES, AND HELICAL PILE FOUNDATIONS. (1705 & CHAPTERS 19, 21, AND 22)
3. FOUNDATION SILLS SHALL BE NATURALLY DURABLE OR PRESERVATIVE-TREATED WOOD. (2304.12.1.4)
4. FIELD WELDING TO BE DONE BY WELDERS CERTIFIED BY THE LADBS FOR (STRUCTURAL STEEL)(REINFORCING STEEL)(LIGHT GAUGE STEEL). CONTINUOUS INSPECTION BY A DEPUTY INSPECTOR IS REQUIRED.
5. SHOP WELDS MUST BE PERFORMED IN A LADBS LICENSED FABRICATOR SHOP.
6. LADBS LICENSED FABRICATOR IS REQUIRED FOR (TRUSSES), (STRUCTURAL STEEL).
7. GLUED-LAMINATED TIMBERS MUST BE FABRICATED IN A LADBS LICENSED SHOP. IDENTIFY GRADE SYMBOL AND LAMINATION SPECIES PER 2015 NDS SUPPLEMENT TABLE 5A.
8. PROVIDE LEAD HOLE 40% – 70% OF THREADED SHANK DIAMETER AND FULL DIAMETER FOR SMOOTH SHANK PORTION.
9. PERIODIC SPECIAL INSPECTION IS REQUIRED FOR WOOD SHEAR WALLS, SHEAR PANELS, AND DIAPHRAGMS, INCLUDING NAILING, BOLTING, ANCHORING, AND OTHER FASTENING TO COMPONENTS OF THE SEISMIC FORCE RESISTING SYSTEM. SPECIAL INSPECTION BY A DEPUTY INSPECTOR IS REQUIRED WHERE THE FASTENER SPACING OF THE SHEATHING IS 4 INCHES ON CENTER OR LESS. (1705.12.2)
10. SPECIAL ACTIVITY INSPECTION IS REQUIRED FOR (BUILDINGS OVER 5 STORIES OR 60' IN HEIGHT) (BUILDINGS OVER 50,000 SQ. FT. OF GROUND FLOOR AREA) (BUILDINGS OVER 200,000 SQ. FT. OF TOTAL FLOOR AREA) (1705.1.6) PC/STR/CORR.LST.104 (REV. 07/28/17) WWW.LADBS.ORG PAGE 3 OF 9.
11. A COPY OF THE LOS ANGELES RESEARCH REPORT AND/OR CONDITIONS OF LISTING SHALL BE MADE AVAILABLE AT THE JOB SITE.
12. IF ADVERSE SOIL CONDITIONS ARE ENCOUNTERED, A SOILS INVESTIGATION REPORT MAY BE REQUIRED
13. HOLD-DOWN CONNECTOR BOLTS INTO WOOD FRAMING REQUIRE APPROVED PLATE WASHERS; AND HOLD-DOWNS SHALL BE FINGER TIGHT AND WRENCH TURNED JUST PRIOR TO COVERING THE WALL FRAMING. CONNECTOR BOLTS INTO WOOD FRAMING REQUIRE STEEL PLATE WASHERS ON THE POST ON THE OPPOSITE SIDE OF THE ANCHORAGE DEVICE. PLATE SIZE SHALL BE A MINIMUM OF 0.299 INCH BY 3 INCHES BY 3 INCHES. (2305.5)
14. ROOF DIAPHRAGM NAILING TO BE INSPECTED BEFORE COVERING. FACE GRAIN OF PLYWOOD SHALL BE PERPENDICULAR TO SUPPORTS. FLOOR SHALL HAVE TONGUE AND GROOVE OR BLOCKED PANEL EDGES. PLYWOOD SPANS SHALL CONFORM WITH TABLE 2304.8(1).
15. ALL DIAPHRAGM AND SHEAR WALL NAILING SHALL UTILIZE COMMON NAILS OR GALVANIZED BOX.
16. ALL BOLT HOLES SHALL BE DRILLED 1/32" TO 1/16" OVERSIZED. (12.1.3.2, NDS)
17. HOLD-DOWN HARDWARE MUST BE SECURED IN PLACE PRIOR TO FOUNDATION INSPECTION.

CONCRETE

1. THE CONCRETE CONSTRUCTION SHALL CONFORM TO THE 'BUILDING CODE REQUIREMENTS FOR REINFORCED CONCRETE', ACI 318-19 WITH MODIFICATIONS.
2. SCHEDULE OF STRUCTURAL CONCRETE 28-DAY STRENGTH & TYPES:

LOCATION IN STRUCTURE	STRENGTH	TYPE
FOOTING	4,000	HARDROCK
SLAB ON GRADE (UNO)	2,500	HARDROCK
ALL OTHER CONCRETE	2,500	HARDROCK

3. PORTLAND CEMENT SHALL CONFORM TO ASTM C-150, TYPE II, LOW ALKALI. 1 PART CEMENT, 2 $\frac{1}{2}$ PARTS SAND, 3 $\frac{1}{2}$ PARTS GRAVEL AND 7 $\frac{1}{2}$ GALLONS OF WATER PER SACK OF CEMENT.
4. AGGREGATE FOR HARDROCK CONCRETE ASTM C-33. EXCEPTIONS MAY BE USED ONLY WITH PERMISSION OF THE STRUCTURAL ENGINEER.
5. ANCHOR BOLTS, DOWELS, INSERTS, ETC. SHALL BE SECURELY TIED IN PLACE PRIOR TO THE POURING OF ANY CONCRETE OR GROUT.
6. ALL EXCAVATIONS SHALL BE FREE OF LOOSE DIRT, WATER OR DEBRIS PRIOR TO POURING CONCRETE.
7. ALL FORMS SHALL BE CONSTRUCTED AS TO MAINTAIN THE REQUIRED POSITION AND SHAPE DURING AND AFTER THE PLACING OF THE CONCRETE AND BE SUFFICIENTLY TIGHT TO PREVENT THE LEAKAGE OF CONCRETE.
8. NO PIPES OR DUCTS ARE TO BE PLACED IN CONCRETE SLABS OR WALLS UNLESS SPECIFICALLY DETAILED.
9. PERFORM WORK IN COMPLIANCE WITH ACI 301
10. ROUGHED CONCRETE SURFACE TO FULL AMPLITUDE OF 1/16 INCH WHERE MASONRY WALLS INTERSECT CONCRETE.
11. FORM EXPOSED CORNERS OF COLUMNS, BEAMS, WALLS, ETC... WITH 3/4 INCH CHAMFERS UNLESS OTHERWISE NOTED.
12. DO NOT USE CONCRETE OR GROUT CONTAINING CHLORIDES.
13. PNEUMATICALLY PLACED CONCRETE SHALL HAVE A 28 DAY STRENGTH OF 2,500 PSI. MATERIALS, PROPORTIONING AND APPLICATION, SHALL BE PLACED BY A QULIFIED CONTRACTOR.

CODE REPORTS

A COPY OF THE LOS ANGELES RESEARCH REPORT AND/OR CONDITIONS OF LISTING SHALL BE MADE AVAILABLE AT THE JOB SITE.

MATERIAL	ICC-ES ESR	CITY OF LOS ANGELES
SIMPSON HOLDOWN (HDU)	ESR-2330/2523	RR25720
Parallam® Parallel Strand Lumber (PSL)	ESR-1387	RR25202
SIMPSON COILED STRAPS (CS/CMST)	ESR-2105/2523	RR25713 / RR25489
SIMPSON FRAMING ANGELES AND PLATES A34/A35/LTP4/LTP5	ESR-2323/3096	RR25814 / RR25910 / RR25489
JOIST HANGER (FACE MOUNT)	ESR-2549/2552/2523	RR25807 / RR25801/ RR25910
SIMPSON GLULAM BEAM AND DOUBLE SHEAR JOIST HANGERS (HU/HUC/HUCQ/HGUS)	ESR-2552/2523/2549	RR25801 / RR25807
Strong-Wall Shear Panels (Wood)	ERS-1267	RR25427
SIMPSON ANCHORING ADHESIVE (SET-XP)	ESR-2508	RR25744 (CRACKED & UNCRACKED CONCRETE) RR25965 (MASONRY)
SIMPSON COLUMN CAP CC/ECC	ESR-2604 / ESR-2523	RR25714

REINFORCING STEEL

1. REINFORCE STEEL STRENGTH : FY=60KSI (GRADE 60)
2. ALL REINFORCING STEEL SHALL BE DETAILED AND PLACED IN CONFORMANCE WITH THE 'BUILDING CODE REQUIREMENTS FOR REINFORCED CONCRETE' (ACI-318-19), AND THE 'MANUAL OF STANDARD PRACTICE FOR REINFORCED CONCRETE CONSTRUCTION' BY THE C.R.S.I. AND THE W.C.R.S.I., OR AS MODIFIED BY THE CONSTRUCTION DOCUMENTS.
3. WELDING WIRE FABRIC SHALL BE ASTM A-185, LAP 1 $\frac{1}{2}$ SPACES, 9 INCH MINIMUM FOR STRUCTURAL SLABS.
4. WELDING OF REINFORCEMENT SHALL BE WITH LOW HYDROGEN ELECTRODES IN CONFORMANCE WITH 'RECOMMENDED PRACTICES FOR WELDING REINFORCING STEEL, ETC.,' AMERICAN WELDING SOCIETY, AWS-D1.4.
5. ALL BARS SHALL BE DEFORMED AS PER ASTM A-305.
6. ALL BARS SHALL BE CLEAN OF LOOSE FLAKY RUST, CREASE OR OTHER MATERIALS LIKELY TO IMPAIR BOND.
7. ALL REINFORCING BAR BENDS SHALL BE MADE COLD.
8. ALL REINFORCING BARS SHALL BE ACCURATELY AND SECURELY PLACED BEFORE POURING CONCRETE.
9. MINIMUM LAP OF WELDED WIRE FABRIC SHALL BE 6 INCHES, OR ONE FULL MESH PLUS TWO INCHES, WHICHEVER IS GREATER.
10. DOWELS BETWEEN FOOTINGS AND WALLS OR COLUMNS SHALL BE THE SAME GRADE, SIZE AND SPACING AS THE VERTICAL REINFORCING, RESPECTIVELY, UNLESS NOTED OTHERWISE.
11. ALL BARS SHALL BE MARKED SO THEIR IDENTIFICATION CAN BE MADE WHEN THE FINAL IN-PLACE INSPECTION IS MADE.
12. THE FOLLOWING MINIMUM CONCRETE COVER SHALL BE PROVIDED FOR REINFORCEMENT PLACED IN CAST-IN-PLACE CONCRETE :

	MINIMUM COVER,	INCHES
A.	CONCRETE CAST AGAINST AND PERMANENTLY EXPOSED TO EARTH............	3
B.	FORMED CONCRETE EXPOSED TO EARTH OR WEATHER:	
	#6 THROUGH #18 BARS............	2
	#5 BAR, W31 OR D31 WIRE, AND SMALLER............	1 1/2
C.	CONCRETE NOT EXPOSED TO WEATHER OR IN CONTACT WITH GROUND: SLABS, WALLS AND JOISTS:	
	#14 AND #18 BARS............	1 1/2
	#11 BAR AND SMALLER............	1
	BEAMS, COLUMNS AND WALL JAMBS PRIMARY REINFORCEMENT, TIES, STIRRUPS, AND SPIRALS:	
	#3 THROUGH #11............	1 1/2
	#14 AND #18 BARS............	2 1/2

14. SPLICING OF BARS SHALL HAVE LAPPING OF 40 INCH DIAMETER OR 3 FEET MINIMUM IN ALL CONTINUOUS REINFORCEMENT OF FOOTINGS AND CONCRETE WALLS, EXCEPT AS NOTED ON PLANS. MASONRY REINFORCEMENT SHALL HAVE LAPPING OF 48 DIAMETER OR 2 FEET MINIMUM.
15. LAP REINFORCING STEEL AT SPLICES TO THE FOLLOWING MINIMUM LENGTHS, UNLESS OTHERWISE NOTED, (APPLICABLE TO 3,000 PSI OR HIGHER, NORMAL WEIGHT CONCRETE ONLY):

BAR SIZE	TOP BARS	OTHER BARS	BAR SIZE	TOP BARS	OTHER BARS
#3	1'-9"	1'-4"	#8	6'-10"	5'-3"
#4	2'-4"	1'-10"	#9	8'-8"	6'-8"
#5	2'-11"	2'-3"	#10	11'-0"	8'-6"
#6	3'-10"	2'-11"	#11	13'-6"	10'-6"
#7	5'-3"	4'-0"			

TOP BARS ARE HORIZONTAL BARS WITH MORE THAN 12 INCHES OF CONCRETE CAST BELOW REBARS. OTHER BARS ARE HORIZONTAL BARS WITH LESS THAN 12 INCHES OF CONCRETE CAST BELOW BARS AND ALL VERTICAL BARS.

16. ALL FIELD WELDING OF REINFORCING STEEL REQUIRES CONTINUOUS INSPECTION BY A SPECIAL INSPECTOR.
17. REINFORCING STEEL, INTERMEDIATE GRADE ASTM A-615 GRADE 60.
18. WELDED WIRE FABRIC SHALL CONFORM TO A.S.T.M. I-185.
19. SPLICES OF HORIZONTAL REINFORCING BAR IN WALLS AND FOOTINGS SHALL BE STAGGERED.
20. DOWELS FOR WALL SHALL BE THE SAME SIZE AND SPACING AS THE WALL REINFORCEMENT AND SHALL LAP WITH THE WALL REINFORCING BAR AS NOTED ABOVE UNLESS NOTED OTHERWISE.
21. WELDING OF REINFORCING STEEL SHALL CONFORM TO A.W.S D12-1 USING PROPER LOW HYDROGEN ELECTRODES.

STATEMENT OF SPECIAL INSPECTIONS

1. THE OWNER SHALL EMPLOY ONE OR MORE DEPUTY INSPECTORS TO PROVIDE INSPECTIONS DURING CONSTRUCTION. THE REGISTERED DEPUTY INSPECTOR(S) SHALL BE A QUALIFIED PERSON AS SET FORTH IN SECTION 1704.2.1 AND SHALL DEMONSTRATE COMPETENCE TO THE SATISFACTION OF THE SUPER INTENDENT OF BUILDING FOR INSPECTION OF THE PARTICULAR TYPE OF CONSTRUCTION OR OPERATION REQUIRING SPECIAL INSPECTION. THE REGISTERED DEPUTY INSPECTOR SHALL BE APPROVED BY AND CHECK WITH THE INSPECTOR RESPONSIBLE TO THE REGISTERED DESIGN PROFESSIONAL IN CHARGE OF THE DESIGN OF THE STRUCTURE.
2. THE REGISTERED DEPUTY INSPECTOR SHALL FURNISH INSPECTION REPORTS TO THE SUPERINTENDENT OF BUILDING AND TO THE REGISTERED DESIGN PROFESSIONAL IN RESPONSIBLE CHARGE. REPORTS SHALL INDICATE THAT WORK INSPECTED WAS DONE IN CONFORMANCE WITH APPROVED CONSTRUCTION DOCUMENTS.
3. EACH CONTRACTOR RESPONSIBLE FOR THE CONSTRUCTION OF A MAIN WIND OR SEISMIC FORCE RESISTING SYSTEM, DESIGNATED SEISMIC SYSTEM OR A WIND OR SEISMIC RESISTING COMPONENT LISTED IN THE "STATEMENT OF SPECIAL INSPECTIONS" SHALL SUBMIT A WRITTEN STATEMENT OF RESPONSIBILITY TO THE SUPERINTENDENT OF BUILDING AND THE OWNER PRIOR TO THE COMMENCEMENT OF WORK ON THE SYSTEM OR COMPONENT. THE CONTRACTOR'S STATEMENT OF RESPONSIBILITY SHALL CONTAIN ACKNOWLEDGEMENT OF AWARENESS OF THE SPECIAL REQUIREMENTS CONTAINED IN THE STATEMENT OF SPECIAL INSPECTION. PER SECTION 1704.3.
4. THE REGISTERED DEPUTY INSPECTOR EMPLOYED ON ANY WORK MUST BE PRESENT DURING THE EXECUTION OF ALL THE WORK THE REGISTERED DEPUTY INSPECTOR HAS UNDERTAKEN TO INSPECT. THE REGISTERED DEPUTY INSPECTOR SHALL NOTIFY THE DEPARTMENT OF THE COMMENCEMENT OF INSPECTION OF A JOB AND SHALL SPECIFY THE TYPE OF INSPECTION FOR WHICH THE REGISTERED DEPUTY INSPECTOR HAS BEEN ENGAGED. (1704.2.4)
5. TESTING LABORATORY SHALL PROVIDE SPECIAL INSPECTION, COMPLYING WITH CALIFORNIA BUILDING CODE SECTION 1704 (UNLESS OTHERWISE NOTED), FOR THE FOLLOWING:
   - ☒ EPOXY ANCHORS
   - ☐ BOLTS INSTALLED IN CONCRETE
   - ☐ CONCRETE STRENGTH f'_c > 2,500 PSI
6. CONTINUOUS SPECIAL INSPECTOR BY A REGISTERED DEPUTY INSPECTOR IS REQUIRED FOR FIELD WELDING, CONCRETE STRENGTH f'_c > 2,500 PSI, HIGH STRENGTH BOLTING, SPRAYED-ON FIREPROOFING, ENGINEERED MASONRY, HIGH-LIFT GROUTING, PRE-STRESSED CONCRETE, HIGH LOAD DIAPHRAGMS AND SPECIAL MOMENT-RESISTING CONCRETE FRAMES.
7. WELDING:
   - FIELD WELDING TO BE DONE BY WELDERS CERTIFIED BY THE BUILDING DEPARTMENT FOR (STRUCTURAL STEEL) (REINFORCING STEEL) (LIGHT GAUGE STEEL). CONTINUOUS INSPECTION BY DEPUTY INSPECTOR IS REQUIRED.
   - CONTINUOUS INSPECTION IS REQUIRED IN ACCORDANCE WITH TABLE 1705A.2.1
   - PERIODIC SPECIAL INSPECTION IS REQUIRED IN ACCORDANCE SECTION 1705A.2.1
   - SHOP WELDS MUST BE PERFORMED IN A LADBS LICENSED FABRICATOR'S SHOP.
8. LICENSED FABRICATOR IS REQUIRED FOR (TRUSSES), (STRUCTURAL STEEL).
9. GLUELAM/PALLARAM BEAMS MUST BE FABRICATED IN THE LICENSED SHOP. IDENTIFY GRADE SYMBOL AND LAMINATION SPECIES PER T5-A, 2015 NDS SUPP.

STRUCTURAL STEEL

1. STRUCTURAL STEEL SHALL CONFORM TO ASTM A992 (Fy=50ksi) EXCEPT FOR PIPE COLUMNS AND SHALL BE FABRICATED AND ERECTED IN ACCORDANCE WITH THE LATEST EDITION OF THE AISC SPECIFICATION FOR DESIGN, FABRICATION AND CONSTRUCTION OF STRUCTURAL STEEL FOR BUILDINGS.
2. SHOP WELDS MUST BE PERFORMED IN A LA CITY BLDG DEPT. LICENCED FABRICATOR'S SHOP.
3. WELDING SHOULD CONFORM TO LOS ANGELES CITY AND THE LATEST AMERICAN WELDING SOCIETY AWS STANDARDS. WELDING SHALL BE PERFORMED BY A PROCESS APPROVED BY THE ENGINEER AND THE BUILDING DEPARTMENT.
4. ALL WELDING IS HALF STRESS WITHOUT CONTINUOUS INSPECTION. UNLESS NOTED OTHERWISE, FULL PENETRATION WELDING REQUIRES CONTINUOUS INSPECTION.
5. ALL STEEL TO STEEL TO WOOD BOLTED CONNECTION SHOULD BE MADE WITH COMMON BOLTS 307, LOCK NUTS AND LOCK WASHERS SHALL BE PROVIDED UNDER THE NUTS.
6. FILLS SHALL BE PROVIDED AT SPLICES OF PARTS HAVING MORE THAN 1/8 INCH DIFFERENCE IN THICKNESS.
7. WELDING SHALL BE DONE BY ELECTRIC ARC PROCESS USING LOW HYDROGEN ELECTRODES WHOSE SPECIFIED TENSILE STRENGTH IS NOT LESS THAN 70 KSI U.N.O AND 80 KSI FOR ALL ASTM 913 STEEL. WELDING MAY BE PERFORMED USING SUBMERGED ARC PROCESS WITH AUTOMATIC WELDING (SAW-1).
8. ALL TUBULAR STEEL SECTIONS SHALL CONFIRM TO A.S.T.M. A-500 GRADE "B" (Fy=46ksi).
9. ALL PIPE SHALL BE ASTM A-53, GRADE "B" (Fy=35ksi).
8. NO STRUCTURAL STEEL SHALL BE FABRICATED OR ERECTED UNTIL SHOP DRAWINGS HAVE BEEN REVIEWED BY THE STRUCTURAL ENGINEER.
9. NO FIELD CUTTING OR BURNING OF STRUCTURAL STEEL WILL BE PERMITTED WITHOUT WRITTEN APPROVAL OF THE STRUCTURAL ENGINEER.
10. BOLT HOLE IN STEEL SHALL BE 1/16" LARGER THAN NOMINAL BOLT SIZE.
11. BOLTS SHALL CONFORM TO A.S.T.M. A-307 UNLESS OTHERWISE NOTED ON PLANS.
12. GAGE METAL SHALL CONFORM TO A.S.T.M. A-245.
13. CONTRACTOR SHALL BE RESPONSIBLE FOR ANY AND ALL NECESSARY BRACING.
14. ALL SUBSTITUTIONS SUBJECT TO BUILDING DEPARTMENT APPROVAL.
15. CONTINUOUS INSPECTION IS REQUIRED FOR FIELD WELDING AND SHOP WELDING TO BE DONE BY AN APPROVED CERTIFIED WELDER.
16. THE SEISMIC DESIGN, FABRICATION, AND ERECTION OF STRUCTURAL STEEL SHALL BE IN ACCORDANCE WITH PART I (LRFD) AND PART III (ASD) OF THE SEISMIC PROVISIONS FOR STRUCTURAL STEEL BUILDINGS, AUGUST 1, 2009, PUBLISHED BY THE AMERICAN INSTITUTE OF STEEL CONSTRUCTION (AISC). THESE PROVISIONS SHALL BE APPLIED IN CONJUNCTION WITH CHAPTER 22, DIVISION II.
17. WELDING SHALL BE PERFORMED IN ACCORDANCE WITH A WELDING PROCEDURE SPECIFICATION (WPS) AS REQUIRED IN AWS D1.1 AND APPROVED BY THE ENGINEER OF RECORD. SPECIFY THE REQUIRED "WELDING PROCEDURE SPECIFICATION" ON PLANS.
18. ALL COMPLETE-JOINT-PENETRATION GROOVE WELDS USED IN THE SEISMIC FORCE RESISTING SYSTEM SHALL BE MADE WITH A FILLER METAL THAT HAS A MINIMUM CVN TOUGHNESS OF 20 FT-LB AT MINUS 20° F.
19. DISCONTINUITIES IN WELD CREATED BY ERRORS OR BY FABRICATION OR ERECTION OPERATIONS, SUCH AS TRACK WELDS, ERECTION AIDS, AIR-ARC GOUGING AND FLAME CUTTING, SHALL BE REPAIRED AS REQUIRED BY THE ENGINEER OF RECORD.
20. FOR CONNECTIONS WITH WELDED FLANGE JOINTS, WELD BACKING AND RUN-OFF TABS SHALL BE REMOVED AND REPAIRED INCLUDING THE USE OF A REINFORCING FILLET WELD, EXCEPT THAT THE TOP-FLANGE BACKING IS PERMITTED TO REMAIN IN PLACE IF IT IS ATTACHED TO THE COLUMN FLANGE WITH A CONTINUOUS FILLET WELD ON THE EDGE BELOW THE COMPLETE-JOINT-PENETRATION GROOVE WELD.

ABBREVIATIONS

&	AND
@	AT
ø	DIAMETER
A.B.	ANCHOR BOLT
APPROX.	APPROXIMATELY
ARCH.	ARCHITECTURAL
BOT.	BOTTOM
BET.	BETWEEN
BLDG.	BUILDING
BLKG.	BLOCKING
BM	BEAM
B.N.	BOUNDARY NAILING
B.S.	BOUNDARY SCREW
CANT.	CANTILEVER
C.J.	CEILING JOIST
CL.	CENTERLINE
CLG.	CEILING
CLR.A.	CLEAR
COL.	COLUMN
CONC.	CONCRETE
CONST.	CONSTRUCTION
CONT.	CONTINUOUS
CRIP.	CRIPPLE
CTR.	CENTER
d_b	BAR DIAMETER
DBL.	DOUBLE
DET.	DETAIL
D.F.L.	DOUGLAS FIR LARCH
DIA.	DIAMETER
DIAG.	DIAGONAL
DIM.	DIMENSION
DN.	DOWN
DO.	DITTO
DWG.(S)	DRAWING(S)
(E)	EXISTING
EA.	EACH
E.E.	EACH END
E.F.	EACH FACE
E.J.	EXPANSION JOINT
EL.	ELEVATION
EMB.	EMBEDMENT
E.N.	EDGE NAILING
EQ.	EQUAL
EQUIP.	EQUIPMENT
E.S.	EACH SIDE
E.W.	EACH WAY
EXP.	EXPANSION
EXT.	EXTERIOR
FND.	FOUNDATION
F.F.	FINISH FLOOR
F.G.	FINISH GRADE
FIN.	FINISH
F.J.	FLOOR JOIST
F.O.C.	FACE OF CONC.
FT.	FEET OR FOOT
FTG.	FOOTING
GA.	GAUGE
GALV.	GALVANIZED
G.B.	GRADE BEAM
GLB	GLU-RAM BEAM
HDR	HEADER
HGR	HANGER
HORIZ.	HORIZONTAL
I.A.	INSIDE DIAMETER
IN.	INCH(ES)
INFO.	INFORMATION
INT.	INTERIOR
LG.	LONG
LONG.	LONGITUDINAL
L.S.	LAG SCREW
LT.WT.	LIGHT WEIGHT
M.B.	MACHINE BOLT
M.D.	MID-DEPTH
MATL.	MATERIAL
MAX.	MAXIMUM
MECH	MECHANICAL
MFR.	MANUFACTURER
MIN.	MINIMUM
MISC.	MISCELLANEOUS
MTL.	METAL
(N)	NEW
N.T.S.	NOT TO SCALE
O.C.,O/C	ON CENTER
O.D.	OUTSIDE DIAMETER
PLYWD.	PLYWOOD
P.T.	PRESSURE TREATED
REF.	REFERENCE
REINF.	REINFORCE(D)
R.R.	ROOF RAFTER
SEC.	SECTION
SHEAT'G	SHEARTHING
SHT.	SHEET
SIM.	SIMILAR
S.J.	SLAB JOINT
S.O.G	SLAB-ON-GRADE
SPECS.	SPECIFICATIONS
SQ.	SQUARE
STAG.	STAGGER(ED)
STD.	STANDARD
ST'L	STEEL
STR.	STRAIGHT
SYM.	SYMMETRICAL
(T)	TOP
TOP&BOT	TOP AND BOTTOM
T & G	TONGUE AND GROOVE
THK	THICK
T.J.	TRUSS JOIST
T.O.C.	TOP OF CONCRETE
T.O.F.	TOP OF FOOTING
T.O.S.	TOP OF SLAB (STEEL)
TRANS.	TRANSVERSE
TYP.	TYPICAL
U.N.O.	UNLESS NOTED OTHERWISE
VERT.	VERTICAL
V.I.F.	VERIFY IN FIELD
W/	WITH
WD	WOOD
W/O	WITHOUT
WT.	WEIGHT
W.W.F.	WELDED WIRE FABRIC

NO.#	REMARKS	DATE

KTW SOLUTIONS, INC.
T: 310.986.2185
E-MAIL: TKIM@KTW-SOLUTIONS.COM

REGISTERED PROFESSIONAL ENGINEER
TAEWON KIM
No. C80632
Exp. 03/31/2027
CIVIL
STATE OF CALIFORNIA
11/25/2025

DESERT ENGINEERS
CONSULTING ENGINEERS
MECHANICAL, ELECTRICAL, PLUMBING AND STRUCTURAL DESIGN
760 / 568 / 9600
http://DESERTENGINEERS.COM

HEAVY EQUIPMENT COVERED PARKING (CANOPY#1)
GENESIS SOLAR SGN-7209
11995 Wiley's Well Road
Blythe, CA. 92225

DRAWN BY:
DATE 11/25/25
SCALE
JOB NO.
SHEET

S-0.0

OF SHEETS

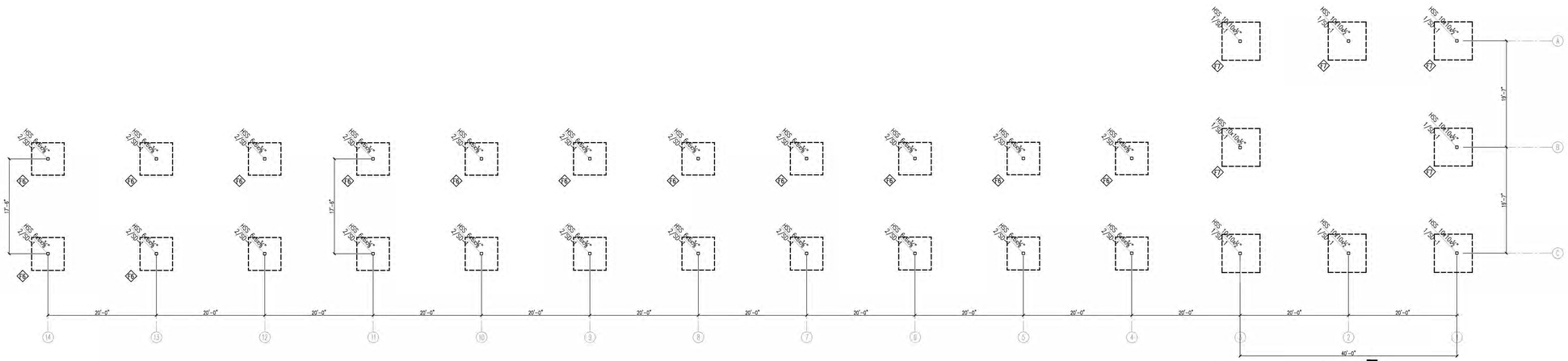

1 **FOUNDATION PLAN**
SCALE: 1/8" = 1'-0"

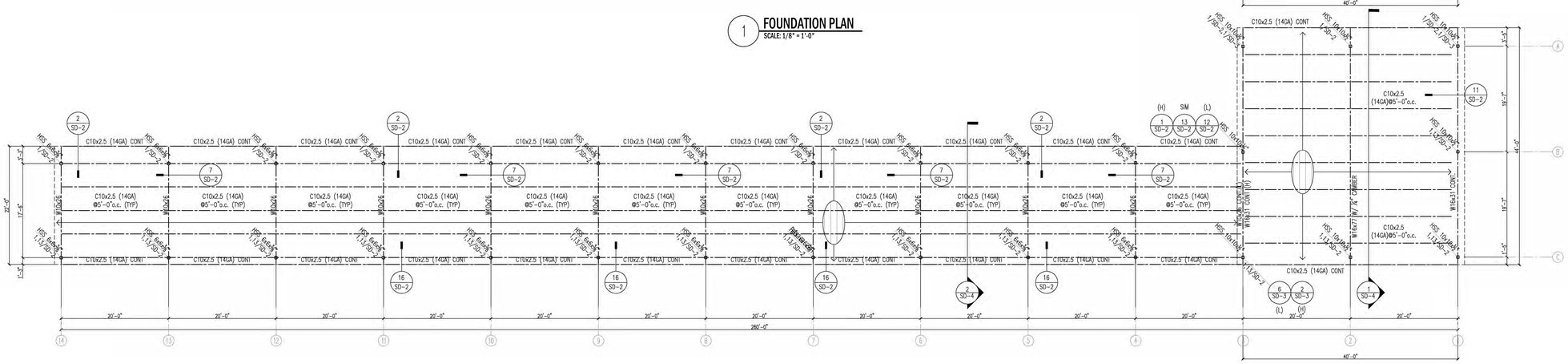

2 **ROOF FRAMING PLAN**
SCALE: 1/8" = 1'-0"

LEGENDS

- INDICATES STEEL POST, SIZE NOTED ON PLAN
- CONC.PAD FOOTING
- CONC. FOOTING
- ROOF
- WOOD BEAM/GIRDER
- ROOF RAFTER
- JOIST/RAFTER SPACING DIRECTION
- METAL DECKING, SEE SCHED.

CONCRETE FOUNDATION SCHED.		
NO.	DESCRIPTION	REINF.
F7	7'x7'x2'(DEPTH)	#6@6"o.c. EA. WAY T&B
F6	6'x6'x2' (DEPTH)	#6@6"o.c. EA. WAY T&B

NO.#	REMARKS	DATE

KTW SOLUTIONS, INC.

T: 310.986.2185
E-MAIL: TKIM@KTW-SOLUTIONS.COM

REGISTERED PROFESSIONAL ENGINEER
TAEWON KIM
No. C80632
Exp. 03/31/2027
STATE OF CALIFORNIA
CIVIL
11/25/2025

DESERT ENGINEERS
CONSULTING ENGINEERS
MECHANICAL, ELECTRICAL, PLUMBING AND STRUCTURAL DESIGN
760 / 568 / 9600
http://DESERTENGINEERS.COM

HEAVY EQUIPMENT COVERED PARKING (CANOPY#1)
GENESIS SOLAR SGN-7209
11995 Wiley's Well Road
Blythe, CA. 92225

DRAWN BY:	
DATE	11/25/25
SCALE	
JOB NO.	
SHEET	S-1
OF	SHEETS

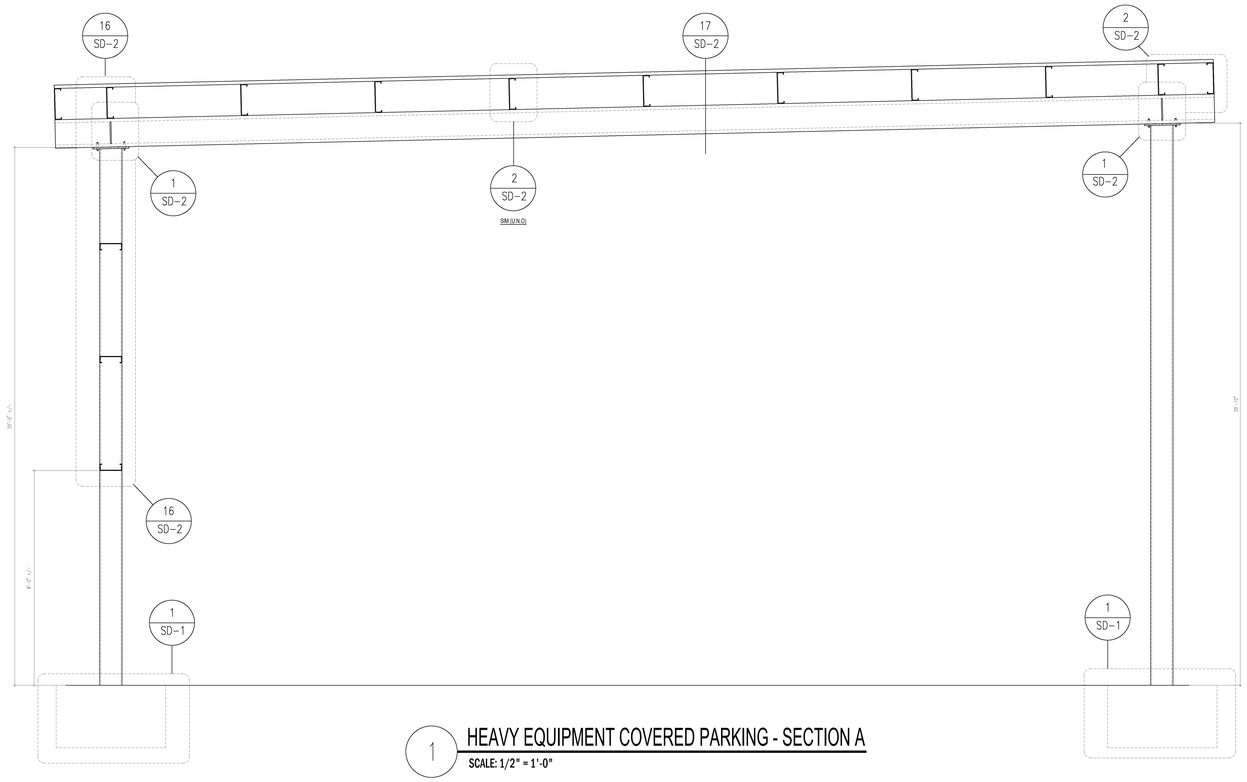

1 HEAVY EQUIPMENT COVERED PARKING - SECTION A

SCALE: 1/2" = 1'-0"

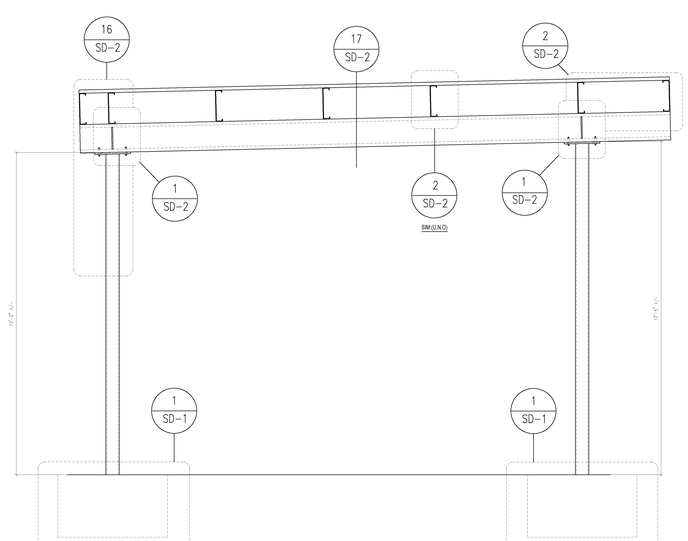

2 HEAVY EQUIPMENT COVERED PARKING - SECTION B

SCALE: 1/2" = 1'-0"

NO.#	REMARKS	DATE

KTW SOLUTIONS, INC.

T: 310.986.2185
E-MAIL: TKIM@KTW-SOLUTIONS.COM

REGISTERED PROFESSIONAL ENGINEER
TAEWON KIM
No. C80632
Exp. 03/31/2027
CIVIL
STATE OF CALIFORNIA

11/25/2025

DESERT ENGINEERS
CONSULTING ENGINEERS
MECHANICAL, ELECTRICAL, PLUMBING AND STRUCTURAL DESIGN
760 / 568 / 9600
http://DESERTENGINEERS.COM

HEAVY EQUIPMENT COVERED PARKING (CANOPY#1)
GENESIS SOLAR SGN-7209
11995 Wiley's Well Road
Blythe, CA. 92225

DRAWN BY:	
DATE	11/25/25
SCALE	
JOB NO.	
SHEET	S-2
OF	SHEETS

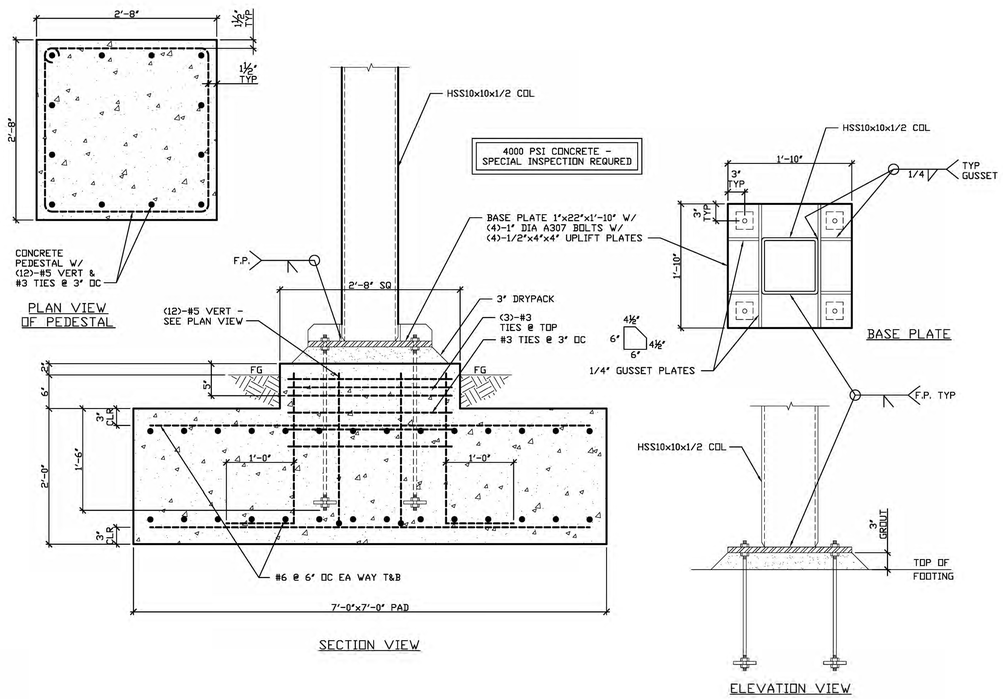

1 FOUNDATION DETAIL

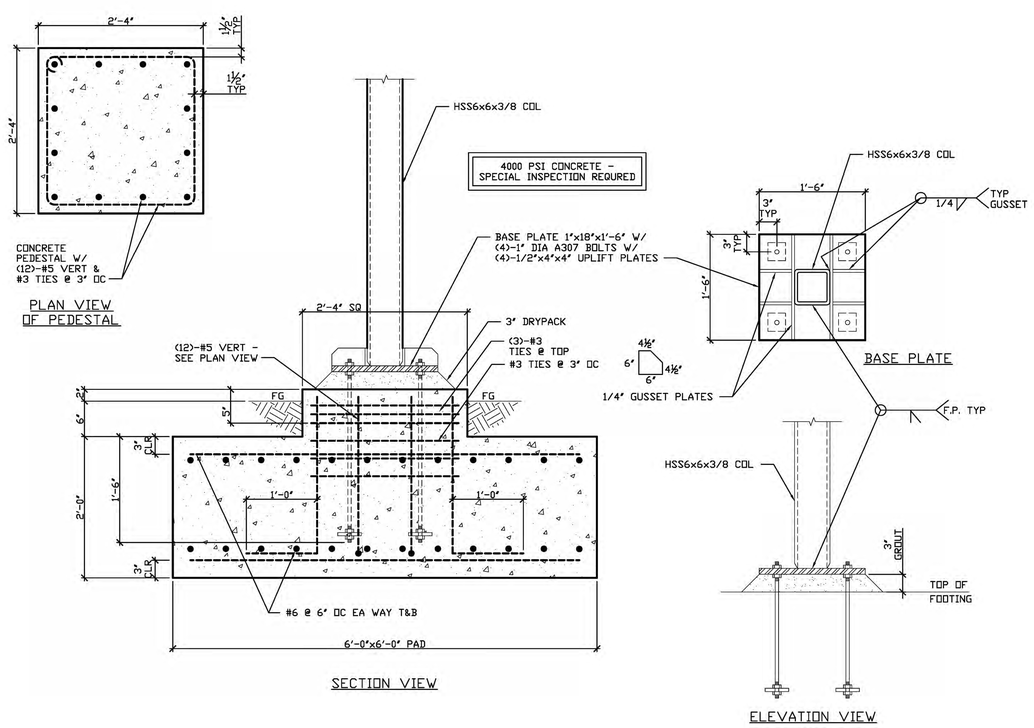

2 FOUNDATION DETAIL

NO.#	REMARKS	DATE

KTW SOLUTIONS, INC.

T: 310.986.2185
E-MAIL: TKIM@KTW-SOLUTIONS.COM

REGISTERED PROFESSIONAL ENGINEER
TAEWON KIM
No. C80632
Exp. 03/31/2027
CIVIL
STATE OF CALIFORNIA
11/25/2025

DESERT ENGINEERS
CONSULTING ENGINEERS
MECHANICAL, ELECTRICAL, PLUMBING AND STRUCTURAL DESIGN
760 / 568 / 9600
http://DESERTENGINEERS.COM

HEAVY EQUIPMENT COVERED PARKING (CANOPY#1)
GENESIS SOLAR SGN-7209
11995 Wiley's Well Road
Blythe, CA. 92225

DRAWN BY:	
DATE	11/25/25
SCALE	
JOB NO.	
SHEET	SD-1
OF	SHEETS

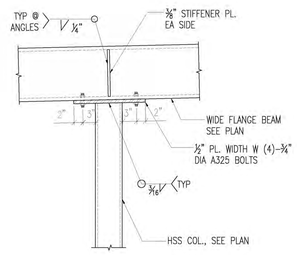

1 FRAMING DETAIL

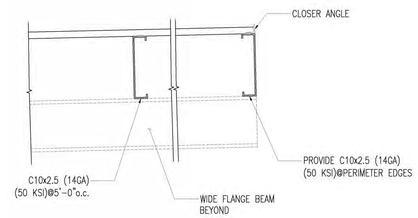

2 FRAMING DETAIL

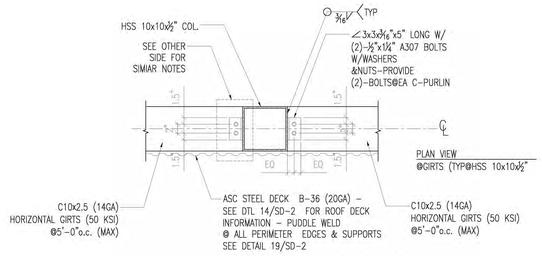

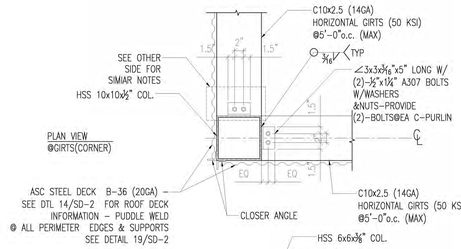

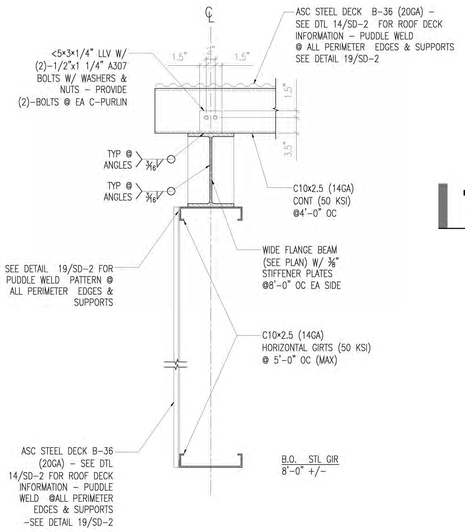

11 FRAMING DETAIL

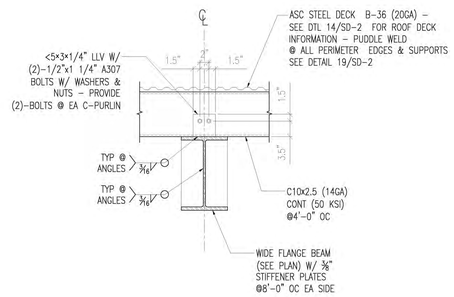

7 FRAMING DETAIL

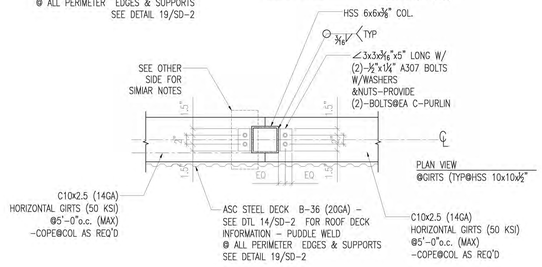

13 FRAMING DETAIL

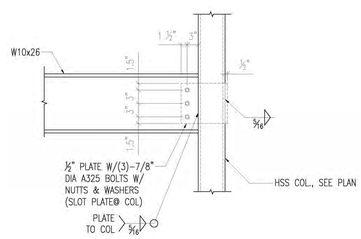

12 FRAMING DETAIL

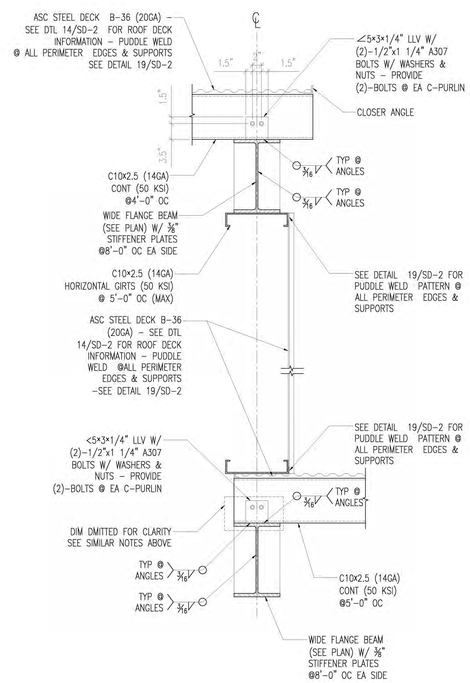

18 FRAMING DETAIL

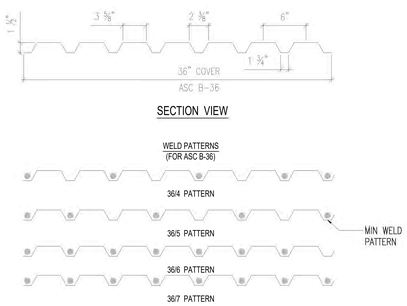

19 FRAMING DETAIL

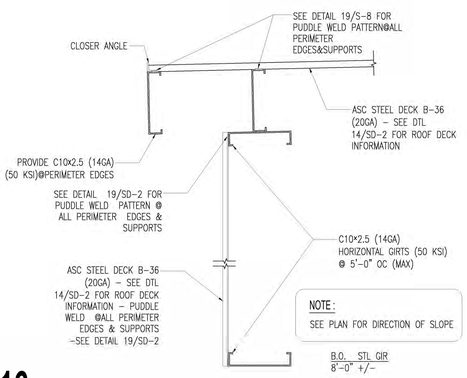

16 FRAMING DETAIL

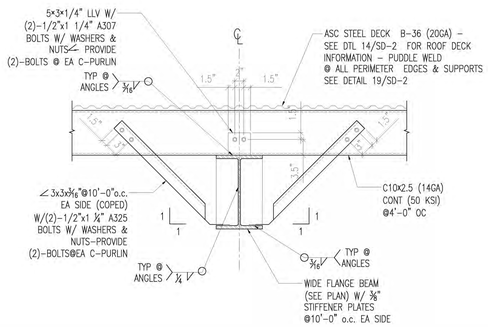

17 FRAMING DETAIL

NO.#	REMARKS	DATE

KTW SOLUTIONS, INC.

T: 310.986.2185
E-MAIL: TKIM@KTW-SOLUTIONS.COM

REGISTERED PROFESSIONAL ENGINEER TAEWON KIM No. C80632 Exp. 03/31/2027 CIVIL STATE OF CALIFORNIA

11/25/2025

DESERT ENGINEERS
CONSULTING ENGINEERS
MECHANICAL, ELECTRICAL, PLUMBING AND STRUCTURAL DESIGN
760 / 568 / 9600
http://DESERTENGINEERS.COM

HEAVY EQUIPMENT COVERED PARKING (CANOPY#1)
GENESIS SOLAR SGN-7209
11995 Wiley's Well Road
Blythe, CA. 92225

DRAWN BY:	
DATE	11/25/25
SCALE	
JOB NO.	
SHEET	SD-2
OF	SHEETS

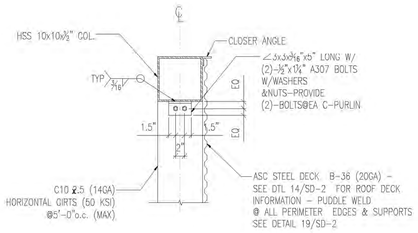

PLAN VIEW @ GIRTS (CORNER)

1 FRAMING DETAIL

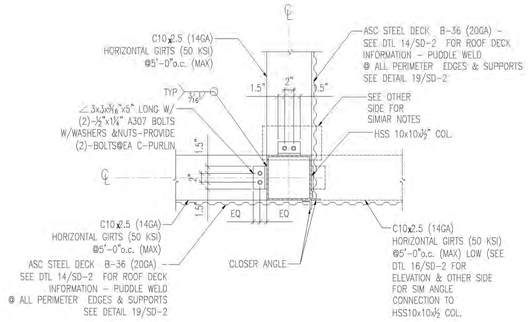

PLAN VIEW @ HIGH GIRTS (CORNER)

2

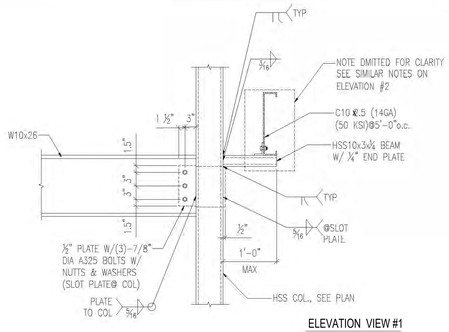

ELEVATION VIEW #1

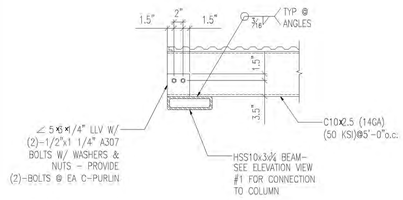

ELEVATION VIEW #2

6 FRAMING DETAIL

ASC Steel Deck

B-36 Roof Deck

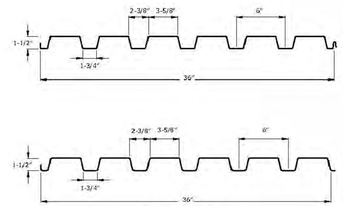

B-36 Nestable

The **B-36 profile** has been enhanced via physical testing to give you the highest diaphragm shear values of any of our prior B-series profiles.

Note: B 35 1/4" – Sacramento

B-36 Section Properties

Gauge	Weight (psf)	I (In4)	S+ (In3)	S– (In3)
22	1.68	0.178	0.18	0.195
20	2.04	0.22	0.235	0.246
18	2.7	0.302	0.321	0.336
16	3.36	0.379	0.407	0.415

1. Section properties are based on minimum 38 ksi steel (Fy).

B-36 Allowable Reactions (plf)

Gauge	Bearing Length 1"	1 1/2"	2"	2 1/2"	3"	3 1/2"	4"
22	416	468	520	572	625	677	729
	1007	1103	1213	1363	1513	1663	1813
20	700	776	853	929	1005	1082	1158
	1495	1617	1739	1897	2088	2280	2472
18	1443	1568	1693	1818	1943	2068	2193
	2734	2909	3084	3258	3436	3710	3985
16	2434	2608	2782	2957	3131	3305	3480
	4350	4578	4806	5034	5262	5490	5786

1. The top value reflects the allowable reaction at the panel end supports.
2. The bottom value reflects the allowable reaction at the interior supports.
3. Values are in pounds per linear foot.

B-36 Allowable Total (DL + LL) Uniform Load (psf)

Span Condition	Gauge		Span 5'0"	5'6"	6'0"	6'6"	7'0"	7'6"	8'0"	8'6"	9'0"	9'6"	10'0"
SINGLE SPAN	22	Stress	109	90	76	65	56	49	43	38	34	30	27
		Deflection	93	70	54	42	34	28	23	19	16	14	12
	20	Stress	143	118	99	85	73	64	56	49	44	40	36
		Deflection	115	87	67	53	42	34	28	23	20	17	14
	18	Stress	195	161	136	115	100	87	76	68	60	54	49
		Deflection	158	119	92	72	58	47	39	32	27	23	20
	16	Stress	247	205	172	146	126	110	97	86	76	69	62
		Deflection	199	149	115	90	72	59	49	40	34	29	25
DOUBLE SPAN	22	Stress	119	98	82	70	60	53	46	41	37	33	30
		Deflection	119	98	82	70	60	53	46	41	37	33	28
	20	Stress	150	124	104	89	76	66	58	52	46	41	37
		Deflection	150	124	104	89	76	66	58	52	46	41	35
	18	Stress	204	169	142	121	104	91	80	71	63	57	51
		Deflection	204	169	142	121	104	91	80	71	63	56	48
	16	Stress	252	209	175	149	129	112	99	87	78	70	63
		Deflection	252	209	175	149	129	112	99	87	78	70	60
TRIPLE SPAN	22	Stress	148	122	103	88	76	66	58	51	46	41	37
		Deflection	148	122	102	80	64	52	43	36	30	26	22
	20	Stress	187	155	130	111	95	83	73	65	58	52	47
		Deflection	187	155	126	99	79	65	53	44	37	32	27
	18	Stress	255	211	177	151	130	113	100	88	79	71	64
		Deflection	255	211	173	136	109	89	73	61	51	44	37
	16	Stress	315	261	219	187	161	140	123	109	97	87	79
		Deflection	315	261	217	171	137	111	92	76	64	55	47

1. Stress based on allowable flexural stress of 22.8 ksi.
2. Deflection based on maximum deflection of L/240.
3. Adequate bearing must be provided.
4. See page 31 for General Notes.

2 Preformed Metal Roof Deck

ASC STEEL DECK INFORMATION SHEET

14 ASC STEEL DECK INFORMATION SHEET

NO.#	REMARKS	DATE

KTW SOLUTIONS, INC.
T: 310.986.2185
E-MAIL: TKIM@KTW-SOLUTIONS.COM

REGISTERED PROFESSIONAL ENGINEER TAEWON KIM No. C80632 Exp. 03/31/2027 CIVIL STATE OF CALIFORNIA
11/25/2025

DESERT ENGINEERS
CONSULTING ENGINEERS
MECHANICAL, ELECTRICAL, PLUMBING AND STRUCTURAL DESIGN
760 / 568 / 9600
http://DESERTENGINEERS.COM

HEAVY EQUIPMENT COVERED PARKING (CANOPY#1)
GENESIS SOLAR SGN-7209
11995 Wiley's Well Road
Blythe, CA. 92225

DRAWN BY:
DATE 11/25/25
SCALE
JOB NO.
SHEET
SD-3
OF SHEETS

AC 11995 Wiley's Well Road

Project Address:

11995 Wiley's Well Road, Blythe, CA 92225
5430 Smokey Mountain Way, Yorba Linda, CA 92887

Structural Calculation

REGISTERED PROFESSIONAL ENGINEER
TAEWON KIM
No. C80632
Exp. 03/31/2027
CIVIL
STATE OF CALIFORNIA

09-30-25

Prepared by

KTW Solutions, Inc.
24328 Vermont Ave Ste 233
Harbor City, CA 90710
(310) 986-2185
Email:tkim@ktw-solutions.com
(310) 986-2185
Email:tkim@ktw-solutions.com

GRAVITY DESIGN

Design Load (Gravity Loads)

Roof				**psf**
	DL	Asphalt shingle	=	4
		Sheathing	=	3
		Framing	=	7
		Misc	=	1
				15
	LL			**20**

Exterior Wall	**20**

**

DL	Dead Load
LL	Live Load
psf	Pound per square feet

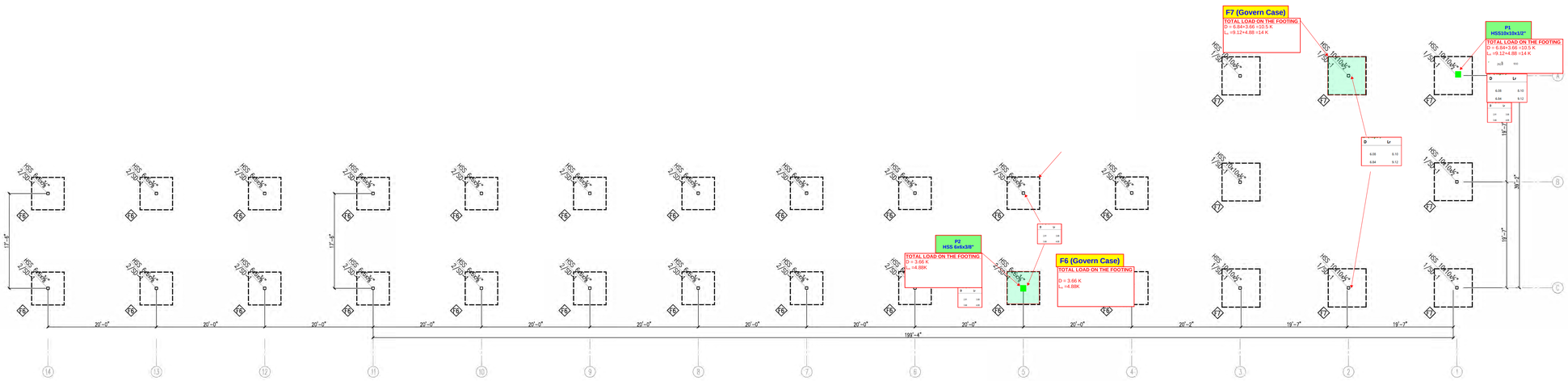

1 FOUNDATION PLAN
SCALE: 1/8" = 1'-0"

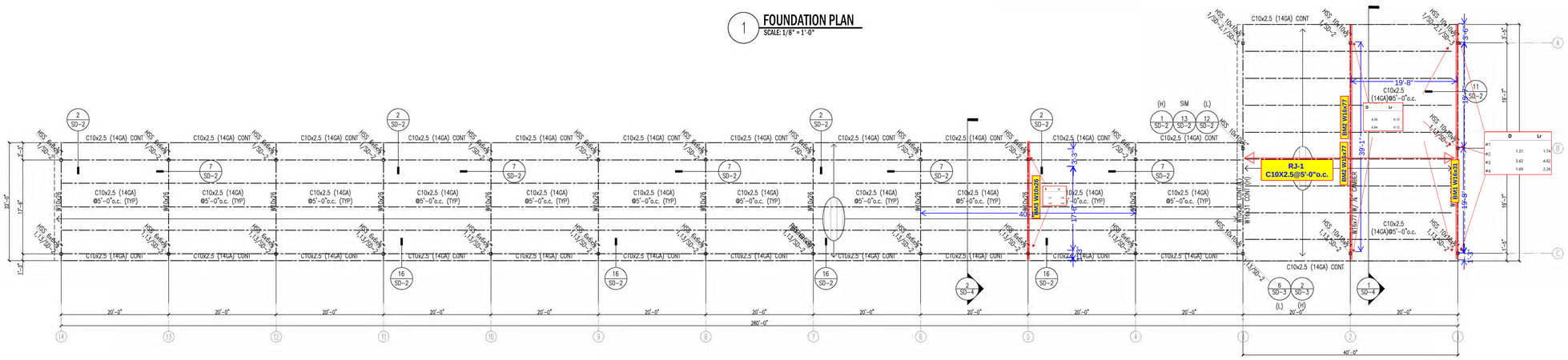

2 ROOF FRAMING PLAN
SCALE: 1/8" = 1'-0"

LEGENDS

- INDICATES STEEL POST, SIZE NOTED ON PLAN
- CONC.PAD FOOTING
- CONC. FOOTING
- ROOF
- WOOD BEAM/GIRDER
- ROOF RAFTER
- JOIST/RAFTER SPACING DIRECTION
- METAL DECKING, SEE SCHED.

CONCRETE FOUNDATION SCHED.		
NO.	DESCRIPTION	REINF.
F7	7'x7'x2'(DEPTH)	#6@6"o.c. EA. WAY T&B
F6	6'x6'x2' (DEPTH)	#6@6"o.c. EA. WAY T&B

NO.#	REMARKS	DATE

KTW SOLUTIONS, INC.

T: 310.986.2185
E-MAIL: TKIM@KTW-SOLUTIONS.COM

REGISTERED PROFESSIONAL ENGINEER TAEWON KIM No. C80632 Exp. 03/31/2027 STRUCTURAL CIVIL STATE OF CALIFORNIA
9/24/2025

REGISTERED PROFESSIONAL ENGINEER DENNIS HURWITZ M21082 Exp. 6/27 MECHANICAL STATE OF CALIFORNIA

DESERT ENGINEERS
CONSULTING ENGINEERS
MECHANICAL, ELECTRICAL, PLUMBING AND STRUCTURAL DESIGN
760 / 568 / 9600
http://DESERTENGINEERS.COM

HEAVY EQUIPMENT COVERED PARKING (CANOPY#2)
GENESIS SOLAR SGN-7209
11995 Wiley's Well Road
Blythe, CA. 92225

DRAWN BY:	
DATE	07/28/25
SCALE	
JOB NO.	
SHEET	S-1
OF	SHEETS

Steel Beam

Project File: 11995 Wiley's Well Road_calc.ec6

LIC# : KW-06020275, Build:20.25.07.09 KTW SOLUTIONS INC. (c) ENERCALC, LLC 1982-2025

DESCRIPTION: BM1

Code References

Governing Code : IBC 2021
Referenced Design Standard(s) : AISC 360-16
Load Combination Set : ASCE 7-16

Material Properties

Analysis Method :Allowable Strength Design
Beam Bracing : Completely Unbraced
Bending Axis : Major Axis Bending

Fy : Steel Yield : 50.0 ksi
E: Modulus : 29,000.0 ksi

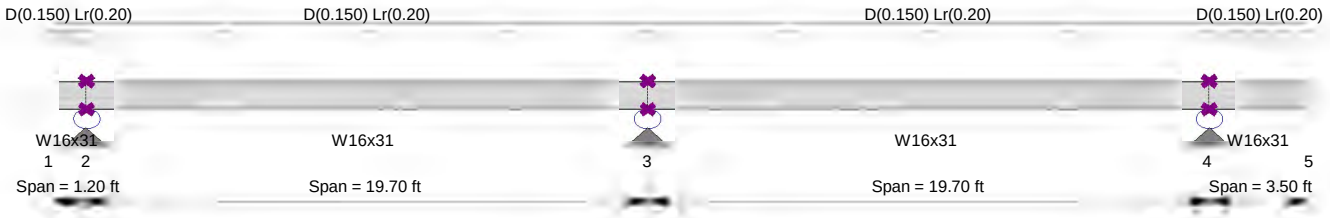

Applied Loads

Service loads entered. Load Factors will be applied for calculations.

Beam self weight NOT internally calculated and added
Load for Span Number 1
Uniform Load : D = 0.0150, Lr = 0.020 ksf, Tributary Width = 10.0 ft, (RJ)
Load for Span Number 2
Uniform Load : D = 0.0150, Lr = 0.020 ksf, Tributary Width = 10.0 ft, (RJ)
Load for Span Number 3
Uniform Load : D = 0.0150, Lr = 0.020 ksf, Tributary Width = 10.0 ft, (RJ)
Load for Span Number 4
Uniform Load : D = 0.0150, Lr = 0.020 ksf, Tributary Width = 10.0 ft, (RJ)

DESIGN SUMMARY

Design OK

Maximum Bending Stress Ratio = **0.216** : 1
Section used for this span **W16x31**
Ma : Applied 16.380 k-ft
Mn / Omega : Allowable 75.846 k-ft
Load Combination +D+Lr
Span # where maximum occurs Span # 2

Maximum Shear Stress Ratio = **0.049** : 1
Section used for this span **W16x31**
Va : Applied 4.266 k
Vn/Omega : Allowable 87.450 k
Load Combination +D+Lr
Location of maximum on span 19.700 ft
Span # where maximum occurs Span # 2

Maximum Deflection

Max Downward Transient Deflection	0.027 in	Ratio =	8,784	>=360	Span: 2 : Lr Only
Max Upward Transient Deflection	-0.006 in	Ratio =	4,721	>=360	Span: 1 : Lr Only
Max Downward Total Deflection	0.047 in	Ratio =	5019	>=240.	Span: 2 : +D+Lr
Max Upward Total Deflection	-0.011 in	Ratio =	2698	>=240.	Span: 1 : +D+Lr

Maximum Forces & Stresses for Load Combinations

Load Combination		Max Stress Ratios		Summary of Moment Values							Summary of Shear Values		
Segment Length	Span #	M	V	Mmax +	Mmax -	Ma Max	Mnx	Mnx/Omega	Cb	Rm	Va Max	Vnx	Vnx/Omega
D Only													
Dsgn. L = 1.20 ft	1	0.001	0.002		-0.11	0.11	225.00	134.73	1.00	1.00	0.18	131.18	87.45
Dsgn. L = 19.70 ft	2	0.093	0.021	4.12	-7.02	7.02	126.66	75.85	2.02	1.00	1.83	131.18	87.45
Dsgn. L = 19.70 ft	3	0.085	0.020	3.63	-7.02	7.02	137.45	82.31	2.19	1.00	1.79	131.18	87.45
Dsgn. L = 3.50 ft	4	0.007	0.006		-0.92	0.92	225.00	134.73	1.00	1.00	0.53	131.18	87.45
+D+Lr													
Dsgn. L = 1.20 ft	1	0.002	0.005		-0.25	0.25	225.00	134.73	1.00	1.00	0.42	131.18	87.45
Dsgn. L = 19.70 ft	2	0.216	0.049	9.62	-16.38	16.38	126.66	75.85	2.02	1.00	4.27	131.18	87.45
Dsgn. L = 19.70 ft	3	0.199	0.048	8.46	-16.38	16.38	137.45	82.31	2.19	1.00	4.17	131.18	87.45
Dsgn. L = 3.50 ft	4	0.016	0.014		-2.14	2.14	225.00	134.73	1.00	1.00	1.23	131.18	87.45
+D+0.750Lr													
Dsgn. L = 1.20 ft	1	0.002	0.004		-0.22	0.22	225.00	134.73	1.00	1.00	0.36	131.18	87.45
Dsgn. L = 19.70 ft	2	0.185	0.042	8.25	-14.04	14.04	126.66	75.85	2.02	1.00	3.66	131.18	87.45
Dsgn. L = 19.70 ft	3	0.171	0.041	7.25	-14.04	14.04	137.45	82.31	2.19	1.00	3.57	131.18	87.45
Dsgn. L = 3.50 ft	4	0.014	0.012		-1.84	1.84	225.00	134.73	1.00	1.00	1.05	131.18	87.45

Steel Beam

Project File: 11995 Wiley's Well Road_calc.ec6

LIC# : KW-06020275, Build:20.25.07.09 KTW SOLUTIONS INC. (c) ENERCALC, LLC 1982-2025

DESCRIPTION: BM1

Maximum Forces & Stresses for Load Combinations

Load Combination		Max Stress Ratios		Summary of Moment Values							Summary of Shear Values		
Segment Length	Span #	M	V	Mmax +	Mmax -	Ma Max	Mnx	Mnx/Omega	Cb	Rm	Va Max	Vnx	Vnx/Omega
+0.60D													
Dsgn. L = 1.20 ft	1	0.000	0.001		-0.06	0.06	225.00	134.73	1.00	1.00	0.11	131.18	87.45
Dsgn. L = 19.70 ft	2	0.056	0.013	2.47	-4.21	4.21	126.66	75.85	2.02	1.00	1.10	131.18	87.45
Dsgn. L = 19.70 ft	3	0.051	0.012	2.18	-4.21	4.21	137.45	82.31	2.19	1.00	1.07	131.18	87.45
Dsgn. L = 3.50 ft	4	0.004	0.004		-0.55	0.55	225.00	134.73	1.00	1.00	0.32	131.18	87.45

Overall Maximum Deflections

Span	Load Combination	Max. "-" Defl	Location in Span	Load Combination	Max. "+" Defl	Location in Span
1		0.0000	0.000	+D+Lr	-0.0107	0.000
2	+D+Lr	0.0471	8.405		0.0000	0.000
3	+D+Lr	0.0390	11.295	+D+Lr	-0.0001	0.263
4		0.0000	11.295	+D+Lr	-0.0232	3.500

Vertical Reactions

Support notation : Far left is #1 Values in KIPS

Load Combination	Support 1	Support 2	Support 3	Support 4	Support 5
Max Upward from all Load Conditions		3.049	8.436	3.950	
Max Upward from Load Combinations		3.049	8.436	3.950	
Max Upward from Load Cases		1.742	4.821	2.257	
D Only		1.307	3.616	1.693	
+D+Lr		3.049	8.436	3.950	
+D+0.750Lr		2.613	7.231	3.386	
+0.60D		0.784	2.169	1.016	
Lr Only		1.742	4.821	2.257	

Steel Beam

Project File: 11995 Wiley's Well Road_calc.ec6

LIC# : KW-06020275, Build:20.25.07.09 KTW SOLUTIONS INC. (c) ENERCALC, LLC 1982-2025

DESCRIPTION: BM2

Code References

Governing Code : IBC 2021
Referenced Design Standard(s) : AISC 360-16
Load Combination Set : ASCE 7-16

Material Properties

Analysis Method :Allowable Strength Design
Beam Bracing : Completely Unbraced
Bending Axis : Major Axis Bending

Fy : Steel Yield : 50.0 ksi
E: Modulus : 29,000.0 ksi

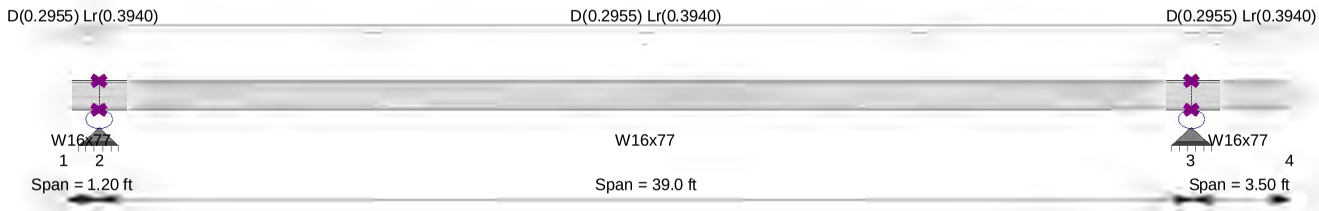

Applied Loads

Service loads entered. Load Factors will be applied for calculations.

Beam self weight NOT internally calculated and added
Load for Span Number 1
Uniform Load : D = 0.0150, Lr = 0.020 ksf, Tributary Width = 19.70 ft, (RJ)
Load for Span Number 2
Uniform Load : D = 0.0150, Lr = 0.020 ksf, Tributary Width = 19.70 ft, (RJ)
Load for Span Number 3
Uniform Load : D = 0.0150, Lr = 0.020 ksf, Tributary Width = 19.70 ft, (RJ)

DESIGN SUMMARY

Design OK

Maximum Bending Stress Ratio = **0.742** : 1
Section used for this span **W16x77**
Ma : Applied 128.733 k-ft
Mn / Omega : Allowable 173.420 k-ft

Load Combination +D+Lr
Span # where maximum occurs Span # 2

Maximum Shear Stress Ratio = **0.090** : 1
Section used for this span **W16x77**
Va : Applied 13.541 k
Vn/Omega : Allowable 150.150 k

Load Combination +D+Lr
Location of maximum on span 39.000 ft
Span # where maximum occurs Span # 2

Maximum Deflection

Max Downward Transient Deflection	0.630 in	Ratio =	742	>=360	Span: 2 : Lr Only
Max Upward Transient Deflection	-0.061 in	Ratio =	468	>=360	Span: 1 : Lr Only
Max Downward Total Deflection	1.103 in	Ratio =	424	>=240.	Span: 2 : +D+Lr
Max Upward Total Deflection	-0.108 in	Ratio =	268	>=240.	Span: 1 : +D+Lr

Maximum Forces & Stresses for Load Combinations

Load Combination		Max Stress Ratios		Summary of Moment Values							Summary of Shear Values		
Segment Length	Span #	M	V	Mmax +	Mmax -	Ma Max	Mnx	Mnx/Omega	Cb	Rm	Va Max	VnxVnx/Omega	
D Only													
Dsgn. L = 1.20 ft	1	0.001	0.002		-0.21	0.21	625.00	374.25	1.00	1.00	0.35	225.23	150.15
Dsgn. L = 39.00 ft	2	0.318	0.039	55.17	-1.81	55.17	289.61	173.42	1.14	1.00	5.80	225.23	150.15
Dsgn. L = 3.50 ft	3	0.005	0.007		-1.81	1.81	625.00	374.25	1.00	1.00	1.03	225.23	150.15
+D+Lr													
Dsgn. L = 1.20 ft	1	0.001	0.006		-0.50	0.50	625.00	374.25	1.00	1.00	0.83	225.23	150.15
Dsgn. L = 39.00 ft	2	0.742	0.090	128.73	-4.22	128.73	289.61	173.42	1.14	1.00	13.54	225.23	150.15
Dsgn. L = 3.50 ft	3	0.011	0.016		-4.22	4.22	625.00	374.25	1.00	1.00	2.41	225.23	150.15
+D+0.750Lr													
Dsgn. L = 1.20 ft	1	0.001	0.005		-0.43	0.43	625.00	374.25	1.00	1.00	0.71	225.23	150.15
Dsgn. L = 39.00 ft	2	0.636	0.077	110.34	-3.62	110.34	289.61	173.42	1.14	1.00	11.61	225.23	150.15
Dsgn. L = 3.50 ft	3	0.010	0.014		-3.62	3.62	625.00	374.25	1.00	1.00	2.07	225.23	150.15
+0.60D													
Dsgn. L = 1.20 ft	1	0.000	0.001		-0.13	0.13	625.00	374.25	1.00	1.00	0.21	225.23	150.15
Dsgn. L = 39.00 ft	2	0.191	0.023	33.10	-1.09	33.10	289.61	173.42	1.14	1.00	3.48	225.23	150.15
Dsgn. L = 3.50 ft	3	0.003	0.004		-1.09	1.09	625.00	374.25	1.00	1.00	0.62	225.23	150.15

Steel Beam

Project File: 11995 Wiley's Well Road_calc.ec6

LIC# : KW-06020275, Build:20.25.07.09 KTW SOLUTIONS INC. (c) ENERCALC, LLC 1982-2025

DESCRIPTION: BM2

Overall Maximum Deflections

Span	Load Combination	Max. "-" Defl	Location in Span	Load Combination	Max. "+" Defl	Location in Span
1		0.0000	0.000	+D+Lr	-0.1076	0.000
2	+D+Lr	1.1026	19.500		0.0000	0.000
3		0.0000	19.500	+D+Lr	-0.3086	3.500

Vertical Reactions

Support notation : Far left is #: Values in KIPS

Load Combination	Support 1	Support 2	Support 3	Support 4
Max Upward from all Load Conditions		14.177	15.954	
Max Upward from Load Combinations		14.177	15.954	
Max Upward from Load Cases		8.101	9.117	
D Only		6.076	6.837	
+D+Lr		14.177	15.954	
+D+0.750Lr		12.152	13.675	
+0.60D		3.646	4.102	
Lr Only		8.101	9.117	

Steel Beam

Project File: 11995 Wiley's Well Road_calc.ec6

LIC# : KW-06020275, Build:20.25.07.09 KTW SOLUTIONS INC. (c) ENERCALC, LLC 1982-2025

DESCRIPTION: BM3

Code References

Governing Code : IBC 2021
Referenced Design Standard(s) : AISC 360-16
Load Combination Set : ASCE 7-16

Material Properties

Analysis Method :Allowable Strength Design
Beam Bracing : Completely Unbraced
Bending Axis : Major Axis Bending

Fy : Steel Yield : 50.0 ksi
E: Modulus : 29,000.0 ksi

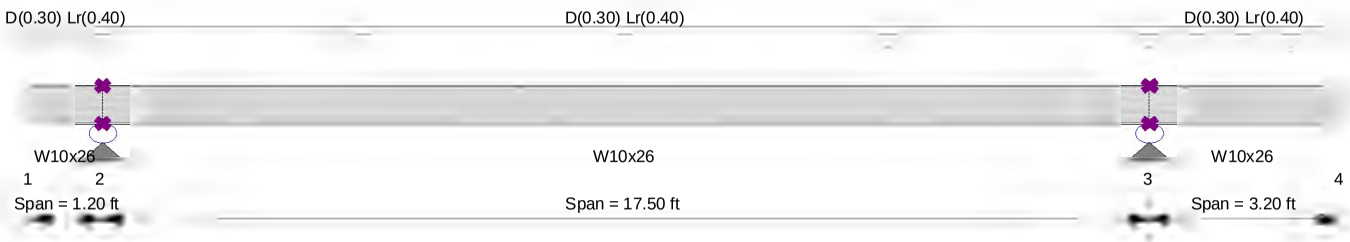

Applied Loads

Service loads entered. Load Factors will be applied for calculations.

Beam self weight NOT internally calculated and added
Load for Span Number 1
Uniform Load : D = 0.0150, Lr = 0.020 ksf, Tributary Width = 20.0 ft, (RJ)
Load for Span Number 2
Uniform Load : D = 0.0150, Lr = 0.020 ksf, Tributary Width = 20.0 ft, (RJ)
Load for Span Number 3
Uniform Load : D = 0.0150, Lr = 0.020 ksf, Tributary Width = 20.0 ft, (RJ)

DESIGN SUMMARY

Design OK

Maximum Bending Stress Ratio = **0.547** : 1
Section used for this span **W10x26**
Ma : Applied 24.775 k-ft
Mn / Omega : Allowable 45.269 k-ft
Load Combination +D+Lr
Span # where maximum occurs Span # 2

Maximum Shear Stress Ratio = **0.118** : 1
Section used for this span **W10x26**
Va : Applied 6.301 k
Vn/Omega : Allowable 53.560 k
Load Combination +D+Lr
Location of maximum on span 17.500 ft
Span # where maximum occurs Span # 2

Maximum Deflection

Max Downward Transient Deflection	0.186 in	Ratio =	1,131	>=360	Span: 2 : Lr Only
Max Upward Transient Deflection	-0.041 in	Ratio =	710	>=360	Span: 1 : Lr Only
Max Downward Total Deflection	0.325 in	Ratio =	646	>=240.	Span: 2 : +D+Lr
Max Upward Total Deflection	-0.071 in	Ratio =	406	>=240.	Span: 1 : +D+Lr

Maximum Forces & Stresses for Load Combinations

Load Combination		Max Stress Ratios		Summary of Moment Values						Summary of Shear Values		
Segment Length	Span #	M	V	Mmax +	Mmax -	Ma Max	Mnx	Mnx/Omega	Cb	Rm	Va Max	VnxVnx/Omega
D Only												
Dsgn. L = 1.20 ft	1	0.003	0.007		-0.22	0.22	130.42	78.09	1.00	1.00	0.36	80.34	53.56
Dsgn. L = 17.50 ft	2	0.235	0.050	10.62	-1.54	10.62	75.60	45.27	1.16	1.00	2.70	80.34	53.56
Dsgn. L = 3.20 ft	3	0.020	0.018		-1.54	1.54	130.42	78.09	1.00	1.00	0.96	80.34	53.56
+D+Lr												
Dsgn. L = 1.20 ft	1	0.006	0.016		-0.50	0.50	130.42	78.09	1.00	1.00	0.84	80.34	53.56
Dsgn. L = 17.50 ft	2	0.547	0.118	24.77	-3.58	24.77	75.60	45.27	1.16	1.00	6.30	80.34	53.56
Dsgn. L = 3.20 ft	3	0.046	0.042		-3.58	3.58	130.42	78.09	1.00	1.00	2.24	80.34	53.56
+D+0.750Lr												
Dsgn. L = 1.20 ft	1	0.006	0.013		-0.43	0.43	130.42	78.09	1.00	1.00	0.72	80.34	53.56
Dsgn. L = 17.50 ft	2	0.469	0.101	21.24	-3.07	21.24	75.60	45.27	1.16	1.00	5.40	80.34	53.56
Dsgn. L = 3.20 ft	3	0.039	0.036		-3.07	3.07	130.42	78.09	1.00	1.00	1.92	80.34	53.56
+0.60D												
Dsgn. L = 1.20 ft	1	0.002	0.004		-0.13	0.13	130.42	78.09	1.00	1.00	0.22	80.34	53.56
Dsgn. L = 17.50 ft	2	0.141	0.030	6.37	-0.92	6.37	75.60	45.27	1.16	1.00	1.62	80.34	53.56
Dsgn. L = 3.20 ft	3	0.012	0.011		-0.92	0.92	130.42	78.09	1.00	1.00	0.58	80.34	53.56

Steel Beam

Project File: 11995 Wiley's Well Road_calc.ec6

LIC# : KW-06020275, Build:20.25.07.09 KTW SOLUTIONS INC. (c) ENERCALC, LLC 1982-2025

DESCRIPTION: BM3

Overall Maximum Deflections

Span	Load Combination	Max. "-" Defl	Location in Span	Load Combination	Max. "+" Defl	Location in Span
1		0.0000	0.000	+D+Lr	-0.0709	0.000
2	+D+Lr	0.3249	8.750		0.0000	0.000
3		0.0000	8.750	+D+Lr	-0.1736	3.200

Vertical Reactions

Support notation : Far left is #: Values in KIPS

Load Combination	Support 1	Support 2	Support 3	Support 4
Max Upward from all Load Conditions		6.789	8.541	
Max Upward from Load Combinations		6.789	8.541	
Max Upward from Load Cases		3.879	4.881	
D Only		2.910	3.660	
+D+Lr		6.789	8.541	
+D+0.750Lr		5.819	7.321	
+0.60D		1.746	2.196	
Lr Only		3.879	4.881	

Steel Column

Project File: 11995 Wiley's Well Road_calc.ec6

LIC# : KW-06020275, Build:20.25.07.09 KTW SOLUTIONS INC. (c) ENERCALC, LLC 1982-2025

DESCRIPTION: P1

Code References

Governing Code : IBC 2021
Referenced Design Standard(s) : AISC 360-16
Load Combinations Used : ASCE 7-16

General Information

Steel Section Name : **HSS10x10x1/2**

Analysis Method :	Allowable Strength
Steel Stress Grade	
Fy : Steel Yield	47.0 ksi
E : Elastic Bending Modulus	29,000.0 ksi

Overall Column Height	21.0 ft
Top & Bottom Fixity	Top Free, Bottom Fixed
Brace condition :	

Unbraced Length for buckling ABOUT X-X Axis = 21.0 ft, K = 1.0
Unbraced Length for buckling ABOUT Y-Y Axis = 21.0 ft, K = 1.0

Applied Loads

Service loads entered. Load Factors will be applied for calculations.

Column self weight included : 1,311.66 lbs * Dead Load Factor
AXIAL LOADS . . .
BM2: Axial Load at 21.0 ft, D = 10.50, LR = 14.0 k
BENDING LOADS . . .
Lat. Point Load at 8.0 ft creating Mx-x, E = 3.554 k

DESIGN SUMMARY

Bending & Shear Check Results

PASS Max. Axial+Bending Stress Ratio = **0.3668** : 1

Load Combination	+1.056D+1.750E	
Location of max.above base	0.0	ft
At maximum location values are . . .		
Pa : Axial	12.471	k
Pn / Omega : Allowable	361.151	k
Ma-x : Applied	-49.756	k-ft
Mn-x / Omega : Allowable	142.360	k-ft
Ma-y : Applied	0.0	k-ft
Mn-y / Omega : Allowable	142.360	k-ft

PASS Maximum Shear Stress Rati **0.04602** : 1

Load Combination	+1.056D+1.750E	
Location of max.above base	0.0	ft
At maximum location values are . . .		
Va : Applied	6.220	k
Vn / Omega : Allowable	135.135	k

Maximum Load Reactions . .

Top along X-X	0.0 k
Bottom along X-X	0.0 k
Top along Y-Y	0.0 k
Bottom along Y-Y	3.554 k

Maximum Load Deflections . . .

Along Y-Y 0.4834 in at 21.0 ft above base
for load combination : E Only

Along X-X 0.0 in at 0.0 ft above base
for load combination :

Load Combination Results

Load Combination	Maximum Axial + Bending Stress Ratios: Stress Ratio	Status	Location	Cbx	Cby	KxLx/Rx	KyLy/Ry	Maximum Shear Ratios: Stress Ratio	Status	Location
D Only	0.033	PASS	0.00 ft	3.00	1.00	65.28	65.28	0.000	PASS	0.00 ft
+D+Lr	0.071	PASS	0.00 ft	3.00	1.00	65.28	65.28	0.000	PASS	0.00 ft
+D+0.750Lr	0.062	PASS	0.00 ft	3.00	1.00	65.28	65.28	0.000	PASS	0.00 ft
+0.60D	0.020	PASS	0.00 ft	3.00	1.00	65.28	65.28	0.000	PASS	0.00 ft
+1.056D+1.750E	0.367	PASS	0.00 ft	3.00	1.00	65.28	65.28	0.046	PASS	0.00 ft
+1.042D+1.313E	0.279	PASS	0.00 ft	3.00	1.00	65.28	65.28	0.035	PASS	0.00 ft
+0.5441D+1.750E	0.358	PASS	0.00 ft	3.00	1.00	65.28	65.28	0.046	PASS	0.00 ft

Maximum Reactions

Note: Only non-zero reactions are listed.

Load Combination	Axial (k) @ Base	Rx (k) @ Base	Rx (k) @ Top	Ry (k) @ Base	Ry (k) @ Top	Mx (k-ft) @ Base	Mx (k-ft) @ Top	My (k-ft) @ Base	My (k-ft) @ Top
D Only	11.812								
+D+Lr	25.812								
+D+0.750Lr	22.312								
+0.60D	7.087								
+D+0.70E	11.812			-2.488		19.902			
+D+0.5250E	11.812			-1.866		14.927			

Steel Column

Project File: 11995 Wiley's Well Road_calc.ec6

LIC# : KW-06020275, Build:20.25.07.09 KTW SOLUTIONS INC. (c) ENERCALC, LLC 1982-2025

DESCRIPTION: P1

Maximum Reactions

Note: Only non-zero reactions are listed.

Load Combination	Axial (k) @ Base	Rx (k) @ Base	Rx (k) @ Top	Ry (k) @ Base	Ry (k) @ Top	Mx (k-ft) @ Base	Mx (k-ft) @ Top	My (k-ft) @ Base	My (k-ft) @ Top
+0.60D+0.70E	7.087			-2.488		19.902			
Lr Only	14.000								
E Only				-3.554		28.432			

Extreme Reactions

Item	Extreme Value	Axial (k) @ Base	Rx (k) @ Base	Rx (k) @ Top	Ry (k) @ Base	Ry (k) @ Top	Mx (k-ft) @ Base	Mx (k-ft) @ Top	My (k-ft) @ Base	My (k-ft) @ Top
Axial, Base Max		25.812								
Axial, Base Min										
Rx, Base Max										
Rx, Base Min										
Ry, Base Max										
Ry, Base Min					-3.554					
Mx, Base Max							28.432			
Mx, Base Min										
My, Base Max										
My, Base Min										

Maximum Deflections for Load Combinations

Load Combination	Max. Deflection in X dir		Distance		Max. Deflection in Y dir		Distance	
D Only	0.0000	in	0.000	ft	0.000	in	0.000	ft
+D+Lr	0.0000	in	0.000	ft	0.000	in	0.000	ft
+D+0.750Lr	0.0000	in	0.000	ft	0.000	in	0.000	ft
+0.60D	0.0000	in	0.000	ft	0.000	in	0.000	ft
+D+0.70E	0.0000	in	0.000	ft	0.338	in	21.000	ft
+D+0.5250E	0.0000	in	0.000	ft	0.254	in	21.000	ft
+0.60D+0.70E	0.0000	in	0.000	ft	0.338	in	21.000	ft
Lr Only	0.0000	in	0.000	ft	0.000	in	0.000	ft
E Only	0.0000	in	0.000	ft	0.480	in	20.859	ft

Steel Section Properties : HSS10x10x1/2

Depth	=	10.000	in	I xx	=	256.00	in^4	J	= 412.000 in^4
Design Thick	=	0.465	in	S xx	=	51.20	in^3		
Width	=	10.000	in	R xx	=	3.860	in		
Wall Thick	=	0.500	in	Zx	=	60.700	in^3		
Area	=	17.200	in^2	I yy	=	256.000	in^4	C	= 84.200 in^3
Weight	=	62.460	plf	S yy	=	51.200	in^3		
				R yy	=	3.860	in		

Ycg = 0.000 in

Steel Column

Project File: 11995 Wiley's Well Road_calc.ec6

LIC# : KW-06020275, Build:20.25.07.09 KTW SOLUTIONS INC. (c) ENERCALC, LLC 1982-2025

DESCRIPTION: P1

Sketches

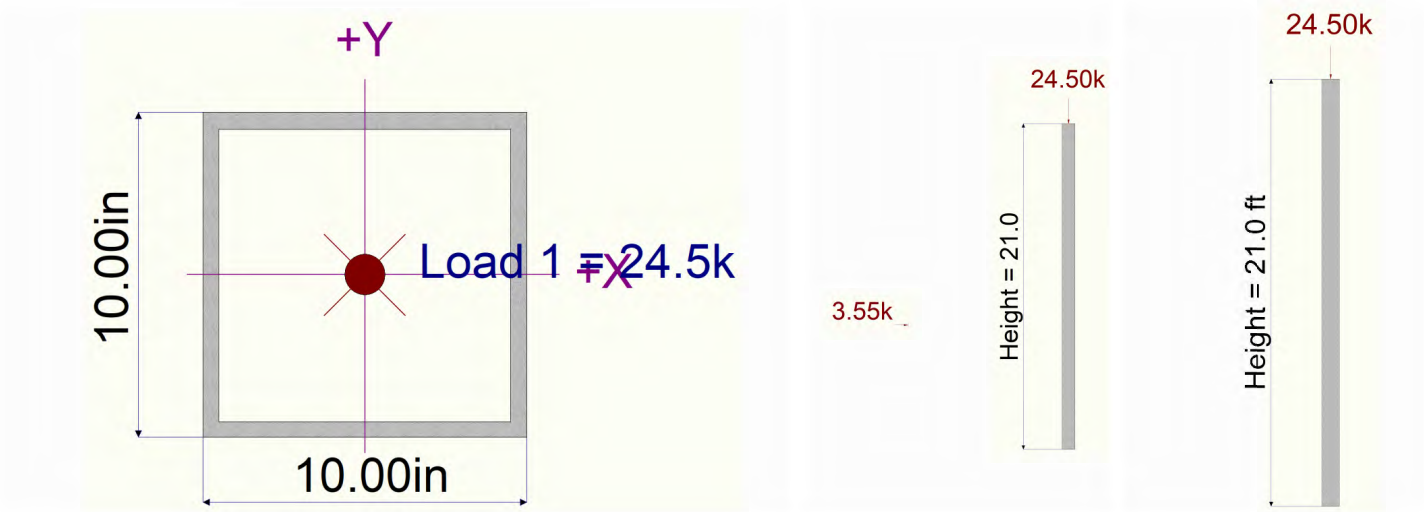

Steel Column

Project File: 11995 Wiley's Well Road_calc.ec6

LIC# : KW-06020275, Build:20.25.07.09 KTW SOLUTIONS INC. (c) ENERCALC, LLC 1982-2025

DESCRIPTION: P2

Code References

Governing Code : IBC 2021
Referenced Design Standard(s) : AISC 360-16
Load Combinations Used : ASCE 7-16

General Information

Steel Section Name : **HSS6x6x3/8**

Analysis Method :	Allowable Strength
Steel Stress Grade	
Fy : Steel Yield	47.0 ksi
E : Elastic Bending Modulus	29,000.0 ksi

Overall Column Height	12.0 ft
Top & Bottom Fixity	Top Free, Bottom Fixed
Brace condition :	

Unbraced Length for buckling ABOUT X-X Axis = 12.0 ft, K = 1.0
Unbraced Length for buckling ABOUT Y-Y Axis = 12.0 ft, K = 1.0

Applied Loads

Service loads entered. Load Factors will be applied for calculations.

Column self weight included : 329.760 lbs * Dead Load Factor
AXIAL LOADS . . .
BM3: Axial Load at 12.0 ft, D = 3.660, LR = 4.880 k
BENDING LOADS . . .
Lat. Point Load at 0.0 ft creating Mx-x, E = 3.078 k

DESIGN SUMMARY

Bending & Shear Check Results

PASS Max. Axial+Bending Stress Ratio = **0.05469** : 1

Load Combination	+D+Lr
Location of max.above base	0.0 ft
At maximum location values are . . .	
Pa : Axial	8.870 k
Pn / Omega : Allowable	162.175 k
Ma-x : Applied	0.0 k-ft
Mn-x / Omega : Allowable	37.056 k-ft
Ma-y : Applied	0.0 k-ft
Mn-y / Omega : Allowable	37.056 k-ft

PASS Maximum Shear Stress Rati **0.0** : 1

Load Combination	0.0
Location of max.above base	0.0 ft
At maximum location values are . . .	
Va : Applied	0.0 k
Vn / Omega : Allowable	0.0 k

Maximum Load Reactions . .

Top along X-X	0.0 k
Bottom along X-X	0.0 k
Top along Y-Y	0.0 k
Bottom along Y-Y	3.078 k

Maximum Load Deflections . . .

Along Y-Y 0.0 in at 0.0ft above base
for load combination :

Along X-X 0.0 in at 0.0ft above base
for load combination :

Load Combination Results

Load Combination	Maximum Axial + Bending Stress Ratios: Stress Ratio	Status	Location	Cbx	Cby	KxLx/Rx	KyLy/Ry	Maximum Shear Ratios: Stress Ratio	Status	Location
D Only	0.025	PASS	0.00 ft	1.00	1.00	63.16	63.16	0.000	PASS	0.00 ft
+D+Lr	0.055	PASS	0.00 ft	1.00	1.00	63.16	63.16	0.000	PASS	0.00 ft
+D+0.750Lr	0.047	PASS	0.00 ft	1.00	1.00	63.16	63.16	0.000	PASS	0.00 ft
+0.60D	0.015	PASS	0.00 ft	1.00	1.00	63.16	63.16	0.000	PASS	0.00 ft
+1.056D+1.750E	0.026	PASS	0.00 ft	1.00	1.00	63.16	63.16	0.000	PASS	0.00 ft
+1.042D+1.313E	0.026	PASS	0.00 ft	1.00	1.00	63.16	63.16	0.000	PASS	0.00 ft
+0.5441D+1.750E	0.013	PASS	0.00 ft	1.00	1.00	63.16	63.16	0.000	PASS	0.00 ft

Maximum Reactions

Note: Only non-zero reactions are listed.

Load Combination	Axial (k) @ Base	Rx (k) @ Base	Rx (k) @ Top	Ry (k) @ Base	Ry (k) @ Top	Mx (k-ft) @ Base	Mx (k-ft) @ Top	My (k-ft) @ Base	My (k-ft) @ Top
D Only	3.990								
+D+Lr	8.870								
+D+0.750Lr	7.650								
+0.60D	2.394								
+D+0.70E	3.990			-2.155		-0.000			
+D+0.5250E	3.990			-1.616		-0.000			

Steel Column

Project File: 11995 Wiley's Well Road_calc.ec6

LIC# : KW-06020275, Build:20.25.07.09 KTW SOLUTIONS INC. (c) ENERCALC, LLC 1982-2025

DESCRIPTION: P2

Maximum Reactions

Note: Only non-zero reactions are listed.

Load Combination	Axial (k) @ Base	Rx (k) @ Base	Rx (k) @ Top	Ry (k) @ Base	Ry (k) @ Top	Mx (k-ft) @ Base	Mx (k-ft) @ Top	My (k-ft) @ Base	My (k-ft) @ Top
+0.60D+0.70E	2.394			-2.155		-0.000			
Lr Only	4.880								
E Only				-3.078		-0.000			

Extreme Reactions

Item	Extreme Value	Axial (k) @ Base	Rx (k) @ Base	Rx (k) @ Top	Ry (k) @ Base	Ry (k) @ Top	Mx (k-ft) @ Base	Mx (k-ft) @ Top	My (k-ft) @ Base	My (k-ft) @ Top
Axial, Base Max		8.870								
Axial, Base Min										
Rx, Base Max										
Rx, Base Min										
Ry, Base Max										
Ry, Base Min					-3.078					
Mx, Base Max										
Mx, Base Min							-0.000			
My, Base Max										
My, Base Min										

Maximum Deflections for Load Combinations

Load Combination	Max. Deflection in X dir	Distance	Max. Deflection in Y dir	Distance
D Only	0.0000 in	0.000 ft	0.000 in	0.000 ft
+D+Lr	0.0000 in	0.000 ft	0.000 in	0.000 ft
+D+0.750Lr	0.0000 in	0.000 ft	0.000 in	0.000 ft
+0.60D	0.0000 in	0.000 ft	0.000 in	0.000 ft
+D+0.70E	0.0000 in	0.000 ft	0.000 in	0.000 ft
+D+0.5250E	0.0000 in	0.000 ft	0.000 in	0.000 ft
+0.60D+0.70E	0.0000 in	0.000 ft	0.000 in	0.000 ft
Lr Only	0.0000 in	0.000 ft	0.000 in	0.000 ft
E Only	0.0000 in	0.000 ft	0.000 in	0.000 ft

Steel Section Properties : HSS6x6x3/8

Depth	=	6.000 in	I xx	=	39.50 in^4	J	=	64.600 in^4
Design Thick	=	0.349 in	S xx	=	13.20 in^3			
Width	=	6.000 in	R xx	=	2.280 in			
Wall Thick	=	0.375 in	Zx	=	15.800 in^3			
Area	=	7.580 in^2	I yy	=	39.500 in^4	C	=	22.100 in^3
Weight	=	27.480 plf	S yy	=	13.200 in^3			
			R yy	=	2.280 in			

Ycg = 0.000 in

Steel Column

Project File: 11995 Wiley's Well Road_calc.ec6

LIC# : KW-06020275, Build:20.25.07.09 KTW SOLUTIONS INC. (c) ENERCALC, LLC 1982-2025

DESCRIPTION: P2

Sketches

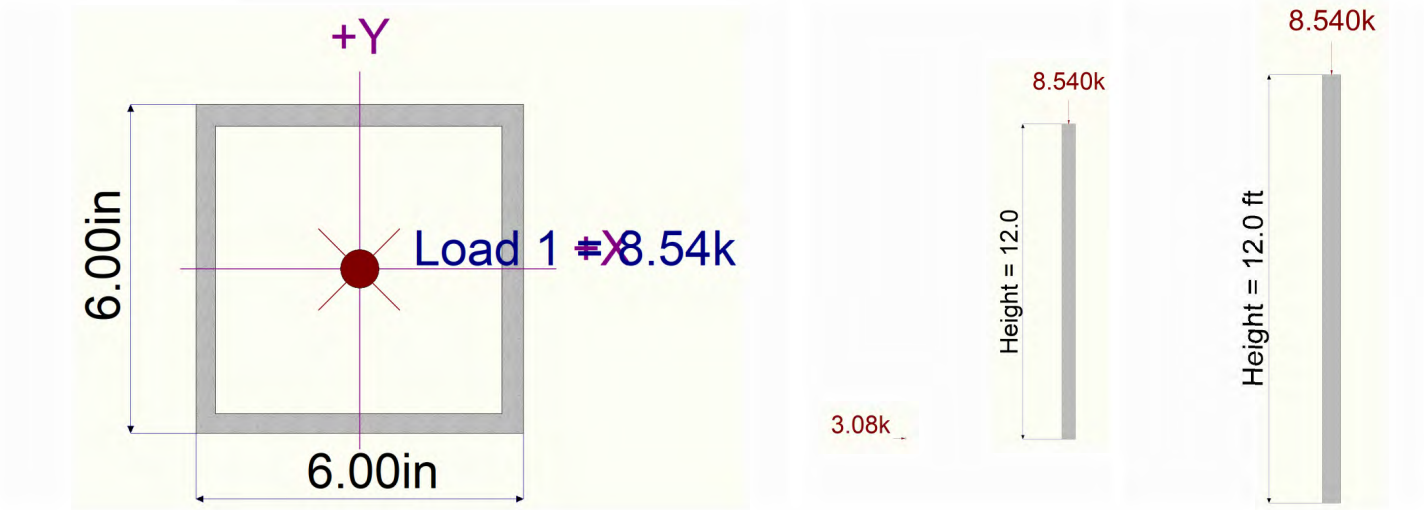

General Footing

Project File: 11995 Wiley's Well Road_calc.ec6

LIC# : KW-06020275, Build:20.25.07.09 KTW SOLUTIONS INC. (c) ENERCALC, LLC 1982-2025

DESCRIPTION: F7

Code References

Calculations per ACI 318-19, IBC 2021
Load Combinations Used : ASCE 7-16

General Information

Material Properties

f'c : Concrete 28 day strength	=	2.50	ksi
fy : Rebar Yield	=	60.0	ksi
Ec : Concrete Elastic Modulus	=	2.0	ksi
Concrete Density	=	145.0	pcf
φ Values Flexure	=	0.90	
Shear	=	0.750	

Analysis Settings

Min Steel % Bending Reinf.	=	
Min Allow % Temp Reinf.	=	0.00180
Min. Overturning Safety Factor	=	1.0 : 1
Min. Sliding Safety Factor	=	1.0 : 1
Add Ftg Wt for Soil Pressure	:	Yes
Use ftg wt for stability, moments & shears	:	Yes
Add Pedestal Wt for Soil Pressure	:	No
Use Pedestal wt for stability, mom & shear	:	No

Soil Design Values

Allowable Soil Bearing	=	1.50	ksf
Soil Density	=	110.0	pcf
Increase Bearing By Footing Weight	=	No	
Soil Passive Resistance (for Sliding)	=	250.0	pcf
Soil/Concrete Friction Coeff.	=	0.250	

Increases based on footing Depth

Footing base depth below soil surface	=	2.0	ft
Allow press. increase per foot of depth	=		ksf
when footing base is below	=		ft

Increases based on footing plan dimension

Allowable pressure increase per foot of depth	=		ksf
when max. length or width is greater than	=		ft

Dimensions

Width parallel to X-X Axis	=	7.0	ft
Length parallel to Z-Z Axis	=	7.0	ft
Footing Thickness	=	12.0	in

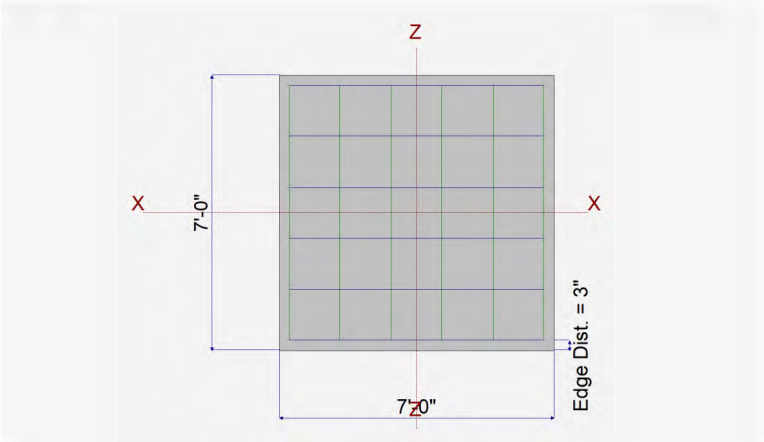

Pedestal dimensions...

px : parallel to X-X Axis	=		in
pz : parallel to Z-Z Axis	=		in
Height	=		in

Bandwidth Distribution Check (ACI 15.4.4.2)

Direction Requiring Closer Separation		n/a
# Bars required within zone		n/a
# Bars required on each side of zone		n/a

Bottom Reinforcing

Bars parallel to X-X Axis (resisting Z Flexure)

Number of Bars	=		6
Reinforcing Bar Size	=	#	6

Bars parallel to Z-Z Axis (resisting X Flexure)

Number of Bars	=		6
Reinforcing Bar Size	=	#	6

Rebar Centerline to Edge of Concrete...

at Bottom of footing	=	3.0	in

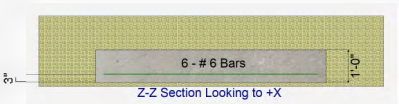

General Footing

Project File: 11995 Wiley's Well Road_calc.ec6

LIC# : KW-06020275, Build:20.25.07.09 KTW SOLUTIONS INC. (c) ENERCALC, LLC 1982-2025

DESCRIPTION: F7

Applied Loads

		D	Lr	L	S	W	E	H	
P : Column Load	=	10.50	14.0						k
OB : Overburden	=								ksf
M-xx	=								k-ft
M-zz	=								k-ft
V-x	=								k
V-z	=								k

DESIGN SUMMARY

Design OK

	Min. Ratio	Item	Applied	Capacity	Governing Load Combination
PASS	0.5033	Soil Bearing	0.7550 ksf	1.50 ksf	+D+Lr about Z-Z axis
PASS	n/a	Overturning - X-X	0.0 k-ft	0.0 k-ft	No Overturning
PASS	n/a	Overturning - Z-Z	0.0 k-ft	0.0 k-ft	No Overturning
PASS	n/a	Sliding - X-X	0.0 k	0.0 k	No Sliding
PASS	n/a	Sliding - Z-Z	0.0 k	0.0 k	No Sliding
PASS	n/a	Uplift	0.0 k	0.0 k	No Uplift
PASS	0.3013	Z Flexure (+X) Bot Tens	4.375 k-ft/ft	14.521 k-ft/ft	+1.20D+1.60Lr
PASS	0.3013	Z Flexure (-X) Bot Tens	4.375 k-ft/ft	14.521 k-ft/ft	+1.20D+1.60Lr
PASS	0.687	Min Steel X Flexure Bottom	0.259 in2/ft	0.377 in2/ft	n/a
PASS	0.3013	X Flexure (+Z) Bot Tens	4.375 k-ft/ft	14.521 k-ft/ft	+1.20D+1.60Lr
PASS	0.3013	X Flexure (-Z) Bot Tens	4.375 k-ft/ft	14.521 k-ft/ft	+1.20D+1.60Lr
PASS	0.687	Min Steel Z Flexure Bottom	0.259 in2/ft	0.377 in2/ft	n/a
PASS	0.0	Z Flexure (+X) Top Tens	0 k-ft/ft	0.0 k-ft/ft	
PASS	0.0	Z Flexure (-X) Top Tens	0 k-ft/ft	0.0 k-ft/ft	
PASS	0.000	Min Steel X Flexure Top	0.000 in2/ft	0.000 in2/ft	n/a
PASS	0.0	X Flexure (+Z) Top Tens	0 k-ft/ft	0.0 k-ft/ft	
PASS	0.0	X Flexure (-Z) Top Tens	0 k-ft/ft	0.0 k-ft/ft	
PASS	0.000	Min Steel Z Flexure Top	0.000 in2/ft	0.000 in2/ft	n/a
PASS	0.3967	1-way Shear (+X)	18.056 psi	45.514 psi	+1.20D+1.60Lr
PASS	0.3967	1-way Shear (-X)	18.056 psi	45.514 psi	+1.20D+1.60Lr
PASS	0.3967	1-way Shear (+Z)	18.056 psi	45.514 psi	+1.20D+1.60Lr
PASS	0.3967	1-way Shear (-Z)	18.056 psi	45.514 psi	+1.20D+1.60Lr
PASS	0.7130	2-way Punching	106.944 psi	150.0 psi	+1.20D+1.60Lr

Detailed Results

Soil Bearing

Rotation Axis & Load Combination...	Gross Allowable	Xecc (in)	Zecc (in)	Actual Soil Bearing Stress @ Location Bottom, -Z	Top, +Z	Left, -X	Right, +X	Actual / Allow Ratio
X-X, D Only	1.50	n/a	0.0	0.4693	0.4693	n/a	n/a	0.313
X-X, +D+Lr	1.50	n/a	0.0	0.7550	0.7550	n/a	n/a	0.503
X-X, +D+0.750Lr	1.50	n/a	0.0	0.6836	0.6836	n/a	n/a	0.456
X-X, +0.60D	1.50	n/a	0.0	0.2816	0.2816	n/a	n/a	0.188
Z-Z, D Only	1.50	0.0	n/a	n/a	n/a	0.4693	0.4693	0.313
Z-Z, +D+Lr	1.50	0.0	n/a	n/a	n/a	0.7550	0.7550	0.503
Z-Z, +D+0.750Lr	1.50	0.0	n/a	n/a	n/a	0.6836	0.6836	0.456
Z-Z, +0.60D	1.50	0.0	n/a	n/a	n/a	0.2816	0.2816	0.188

Overturning Stability

Rotation Axis & Load Combination...	Overturning Moment	Resisting Moment	Stability Ratio	Status
Footing Has NO Overturning				

All units k

Sliding Stability

Force Application Axis Load Combination...	Sliding Force	Resisting Force	Stability Ratio	Status
Footing Has NO Sliding				

General Footing

Project File: 11995 Wiley's Well Road_calc.ec6

LIC# : KW-06020275, Build:20.25.07.09 KTW SOLUTIONS INC. (c) ENERCALC, LLC 1982-2025

DESCRIPTION: F7

Footing Tension on Bottom

Flexure Axis & Load Combination	Mu k-ft	Side	Tension Surface	As Req'd in^2	Gvrn. As in^2	Actual As in^2	Phi*Mn k-ft	Status
X-X, +1.40D	1.838	+Z	Bottom	0.2592	ACI 7.6.1.1	0.3771	14.521	OK
X-X, +1.40D	1.838	-Z	Bottom	0.2592	ACI 7.6.1.1	0.3771	14.521	OK
X-X, +1.20D+0.50Lr	2.450	+Z	Bottom	0.2592	ACI 7.6.1.1	0.3771	14.521	OK
X-X, +1.20D+0.50Lr	2.450	-Z	Bottom	0.2592	ACI 7.6.1.1	0.3771	14.521	OK
X-X, +1.20D	1.575	+Z	Bottom	0.2592	ACI 7.6.1.1	0.3771	14.521	OK
X-X, +1.20D	1.575	-Z	Bottom	0.2592	ACI 7.6.1.1	0.3771	14.521	OK
X-X, +1.20D+1.60Lr	4.375	+Z	Bottom	0.2592	ACI 7.6.1.1	0.3771	14.521	OK
X-X, +1.20D+1.60Lr	4.375	-Z	Bottom	0.2592	ACI 7.6.1.1	0.3771	14.521	OK
X-X, +0.90D	1.181	+Z	Bottom	0.2592	ACI 7.6.1.1	0.3771	14.521	OK
X-X, +0.90D	1.181	-Z	Bottom	0.2592	ACI 7.6.1.1	0.3771	14.521	OK
Z-Z, +1.40D	1.838	-X	Bottom	0.2592	ACI 7.6.1.1	0.3771	14.521	OK
Z-Z, +1.40D	1.838	+X	Bottom	0.2592	ACI 7.6.1.1	0.3771	14.521	OK
Z-Z, +1.20D+0.50Lr	2.450	-X	Bottom	0.2592	ACI 7.6.1.1	0.3771	14.521	OK
Z-Z, +1.20D+0.50Lr	2.450	+X	Bottom	0.2592	ACI 7.6.1.1	0.3771	14.521	OK
Z-Z, +1.20D	1.575	-X	Bottom	0.2592	ACI 7.6.1.1	0.3771	14.521	OK
Z-Z, +1.20D	1.575	+X	Bottom	0.2592	ACI 7.6.1.1	0.3771	14.521	OK
Z-Z, +1.20D+1.60Lr	4.375	-X	Bottom	0.2592	ACI 7.6.1.1	0.3771	14.521	OK
Z-Z, +1.20D+1.60Lr	4.375	+X	Bottom	0.2592	ACI 7.6.1.1	0.3771	14.521	OK
Z-Z, +0.90D	1.181	-X	Bottom	0.2592	ACI 7.6.1.1	0.3771	14.521	OK
Z-Z, +0.90D	1.181	+X	Bottom	0.2592	ACI 7.6.1.1	0.3771	14.521	OK

One Way Shear X

Load Combination...	Vu @ -X	Vu @ +X	Vu:Max	Phi Vn	Vu / Phi*Vn	Status
+1.40D	7.58 psi	7.58 psi	7.58 psi	45.51 psi	0.17	OK
+1.20D+0.50Lr	10.11 psi	10.11 psi	10.11 psi	45.51 psi	0.22	OK
+1.20D	6.50 psi	6.50 psi	6.50 psi	45.51 psi	0.14	OK
+1.20D+1.60Lr	18.06 psi	18.06 psi	18.06 psi	45.51 psi	0.40	OK
+0.90D	4.88 psi	4.88 psi	4.88 psi	45.51 psi	0.11	OK

One Way Shear Z

Load Combination...	Vu @ -Z	Vu @ +Z	Vu:Max	Phi Vn	Vu / Phi*Vn	Status
+1.40D	7.58 psi	7.58 psi	7.58 psi	45.51 psi	0.17	OK
+1.20D+0.50Lr	10.11 psi	10.11 psi	10.11 psi	45.51 psi	0.22	OK
+1.20D	6.50 psi	6.50 psi	6.50 psi	45.51 psi	0.14	OK
+1.20D+1.60Lr	18.06 psi	18.06 psi	18.06 psi	45.51 psi	0.40	OK
+0.90D	4.88 psi	4.88 psi	4.88 psi	45.51 psi	0.11	OK

Two-Way "Punching" Shear

All units k

Load Combination...	Vu	Phi*Vn	Vu / Phi*Vn	Status
+1.40D	44.92 psi	150.00 psi	0.30	OK
+1.20D+0.50Lr	59.89 psi	150.00 psi	0.40	OK
+1.20D	38.50 psi	150.00 psi	0.26	OK
+1.20D+1.60Lr	106.94 psi	150.00 psi	0.71	OK
+0.90D	28.88 psi	150.00 psi	0.19	OK

General Footing

Project File: 11995 Wiley's Well Road_calc.ec6

LIC# : KW-06020275, Build:20.25.07.09 KTW SOLUTIONS INC. (c) ENERCALC, LLC 1982-2025

DESCRIPTION: F6

Code References

Calculations per ACI 318-19, IBC 2021
Load Combinations Used : ASCE 7-16

General Information

Material Properties

f'c : Concrete 28 day strength	=	2.50	ksi
fy : Rebar Yield	=	60.0	ksi
Ec : Concrete Elastic Modulus	=	2.0	ksi
Concrete Density	=	145.0	pcf
φ Values Flexure	=	0.90	
Shear	=	0.750	

Analysis Settings

Min Steel % Bending Reinf.	=	
Min Allow % Temp Reinf.	=	0.00180
Min. Overturning Safety Factor	=	1.0 : 1
Min. Sliding Safety Factor	=	1.0 : 1
Add Ftg Wt for Soil Pressure	:	Yes
Use ftg wt for stability, moments & shears	:	Yes
Add Pedestal Wt for Soil Pressure	:	No
Use Pedestal wt for stability, mom & shear	:	No

Soil Design Values

Allowable Soil Bearing	=	1.50	ksf
Soil Density	=	110.0	pcf
Increase Bearing By Footing Weight	=	No	
Soil Passive Resistance (for Sliding)	=	250.0	pcf
Soil/Concrete Friction Coeff.	=	0.250	

Increases based on footing Depth

Footing base depth below soil surface	=	2.0	ft
Allow press. increase per foot of depth	=		ksf
when footing base is below	=		ft

Increases based on footing plan dimension

Allowable pressure increase per foot of depth	=		ksf
when max. length or width is greater than	=		ft

Dimensions

Width parallel to X-X Axis	=	6.0	ft
Length parallel to Z-Z Axis	=	6.0	ft
Footing Thickness	=	12.0	in

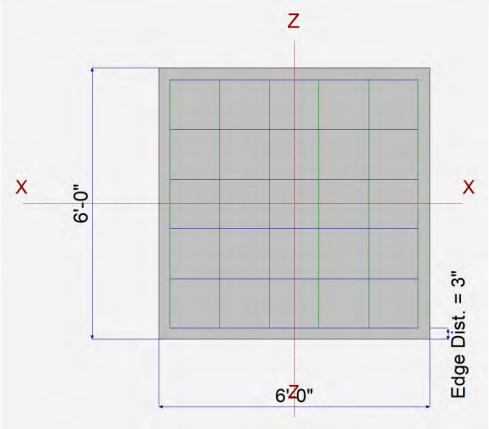

Pedestal dimensions...

px : parallel to X-X Axis	=		in
pz : parallel to Z-Z Axis	=		in
Height	=		in

Bandwidth Distribution Check (ACI 15.4.4.2)

Direction Requiring Closer Separation		n/a
# Bars required within zone		n/a
# Bars required on each side of zone		n/a

Bottom Reinforcing

Bars parallel to X-X Axis (resisting Z Flexure)

Number of Bars	=		6.0
Reinforcing Bar Size	=	#	6

Bars parallel to Z-Z Axis (resisting X Flexure)

Number of Bars	=		6.0
Reinforcing Bar Size	=	#	6

Rebar Centerline to Edge of Concrete...

at Bottom of footing	=		3.0 in

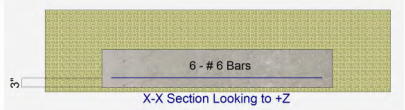

General Footing

Project File: 11995 Wiley's Well Road_calc.ec6

LIC# : KW-06020275, Build:20.25.07.09 KTW SOLUTIONS INC. (c) ENERCALC, LLC 1982-2025

DESCRIPTION: F6

Applied Loads

		D	Lr	L	S	W	E	H	
P : Column Load	=	3.660	4.880						k
OB : Overburden	=								ksf
M-xx	=								k-ft
M-zz	=								k-ft
V-x	=								k
V-z	=								k

DESIGN SUMMARY

Design OK

	Min. Ratio	Item	Applied	Capacity	Governing Load Combination
PASS	0.3281	Soil Bearing	0.4922 ksf	1.50 ksf	+D+Lr about Z-Z axis
PASS	n/a	Overturning - X-X	0.0 k-ft	0.0 k-ft	No Overturning
PASS	n/a	Overturning - Z-Z	0.0 k-ft	0.0 k-ft	No Overturning
PASS	n/a	Sliding - X-X	0.0 k	0.0 k	No Sliding
PASS	n/a	Sliding - Z-Z	0.0 k	0.0 k	No Sliding
PASS	n/a	Uplift	0.0 k	0.0 k	No Uplift
PASS	0.09080	Z Flexure (+X) Bot Tens	1.525 k-ft/ft	16.795 k-ft/ft	+1.20D+1.60Lr
PASS	0.09080	Z Flexure (-X) Bot Tens	1.525 k-ft/ft	16.795 k-ft/ft	+1.20D+1.60Lr
PASS	0.589	Min Steel X Flexure Bottom	0.259 in2/ft	0.440 in2/ft	n/a
PASS	0.09080	X Flexure (+Z) Bot Tens	1.525 k-ft/ft	16.795 k-ft/ft	+1.20D+1.60Lr
PASS	0.09080	X Flexure (-Z) Bot Tens	1.525 k-ft/ft	16.795 k-ft/ft	+1.20D+1.60Lr
PASS	0.589	Min Steel Z Flexure Bottom	0.259 in2/ft	0.440 in2/ft	n/a
PASS	0.0	Z Flexure (+X) Top Tens	0 k-ft/ft	0.0 k-ft/ft	
PASS	0.0	Z Flexure (-X) Top Tens	0 k-ft/ft	0.0 k-ft/ft	
PASS	0.000	Min Steel X Flexure Top	0.000 in2/ft	0.000 in2/ft	n/a
PASS	0.0	X Flexure (+Z) Top Tens	0 k-ft/ft	0.0 k-ft/ft	
PASS	0.0	X Flexure (-Z) Top Tens	0 k-ft/ft	0.0 k-ft/ft	
PASS	0.000	Min Steel Z Flexure Top	0.000 in2/ft	0.000 in2/ft	n/a
PASS	0.1454	1-way Shear (+X)	6.966 psi	47.914 psi	+1.20D+1.60Lr
PASS	0.1493	1-way Shear (-X)	7.154 psi	47.914 psi	+1.20D+1.60Lr
PASS	0.1454	1-way Shear (+Z)	6.966 psi	47.914 psi	+1.20D+1.60Lr
PASS	0.1493	1-way Shear (-Z)	7.154 psi	47.914 psi	+1.20D+1.60Lr
PASS	0.2474	2-way Punching	37.112 psi	150.0 psi	+1.20D+1.60Lr

Detailed Results

Soil Bearing

Rotation Axis & Load Combination...	Gross Allowable	Xecc (in)	Zecc (in)	Actual Soil Bearing Stress @ Location Bottom, -Z	Top, +Z	Left, -X	Right, +X	Actual / Allow Ratio
X-X, D Only	1.50	n/a	0.0	0.3567	0.3567	n/a	n/a	0.238
X-X, +D+Lr	1.50	n/a	0.0	0.4922	0.4922	n/a	n/a	0.328
X-X, +D+0.750Lr	1.50	n/a	0.0	0.4583	0.4583	n/a	n/a	0.306
X-X, +0.60D	1.50	n/a	0.0	0.2140	0.2140	n/a	n/a	0.143
Z-Z, D Only	1.50	0.0	n/a	n/a	n/a	0.3567	0.3567	0.238
Z-Z, +D+Lr	1.50	0.0	n/a	n/a	n/a	0.4922	0.4922	0.328
Z-Z, +D+0.750Lr	1.50	0.0	n/a	n/a	n/a	0.4583	0.4583	0.306
Z-Z, +0.60D	1.50	0.0	n/a	n/a	n/a	0.2140	0.2140	0.143

Overturning Stability

Rotation Axis & Load Combination...	Overturning Moment	Resisting Moment	Stability Ratio	Status
Footing Has NO Overturning				

All units k

Sliding Stability

Force Application Axis Load Combination...	Sliding Force	Resisting Force	Stability Ratio	Status
Footing Has NO Sliding				

General Footing

Project File: 11995 Wiley's Well Road_calc.ec6

LIC# : KW-06020275, Build:20.25.07.09 KTW SOLUTIONS INC. (c) ENERCALC, LLC 1982-2025

DESCRIPTION: F6

Footing Tension on Bottom

Flexure Axis & Load Combination	Mu k-ft	Side	Tension Surface	As Req'd in^2	Gvrn. As in^2	Actual As in^2	Phi*Mn k-ft	Status
X-X, +1.40D	0.6405	+Z	Bottom	0.2592	ACI 7.6.1.1	0.440	16.795	OK
X-X, +1.40D	0.6405	-Z	Bottom	0.2592	ACI 7.6.1.1	0.440	16.795	OK
X-X, +1.20D+0.50Lr	0.8540	+Z	Bottom	0.2592	ACI 7.6.1.1	0.440	16.795	OK
X-X, +1.20D+0.50Lr	0.8540	-Z	Bottom	0.2592	ACI 7.6.1.1	0.440	16.795	OK
X-X, +1.20D	0.5490	+Z	Bottom	0.2592	ACI 7.6.1.1	0.440	16.795	OK
X-X, +1.20D	0.5490	-Z	Bottom	0.2592	ACI 7.6.1.1	0.440	16.795	OK
X-X, +1.20D+1.60Lr	1.525	+Z	Bottom	0.2592	ACI 7.6.1.1	0.440	16.795	OK
X-X, +1.20D+1.60Lr	1.525	-Z	Bottom	0.2592	ACI 7.6.1.1	0.440	16.795	OK
X-X, +0.90D	0.4118	+Z	Bottom	0.2592	ACI 7.6.1.1	0.440	16.795	OK
X-X, +0.90D	0.4118	-Z	Bottom	0.2592	ACI 7.6.1.1	0.440	16.795	OK
Z-Z, +1.40D	0.6405	-X	Bottom	0.2592	ACI 7.6.1.1	0.440	16.795	OK
Z-Z, +1.40D	0.6405	+X	Bottom	0.2592	ACI 7.6.1.1	0.440	16.795	OK
Z-Z, +1.20D+0.50Lr	0.8540	-X	Bottom	0.2592	ACI 7.6.1.1	0.440	16.795	OK
Z-Z, +1.20D+0.50Lr	0.8540	+X	Bottom	0.2592	ACI 7.6.1.1	0.440	16.795	OK
Z-Z, +1.20D	0.5490	-X	Bottom	0.2592	ACI 7.6.1.1	0.440	16.795	OK
Z-Z, +1.20D	0.5490	+X	Bottom	0.2592	ACI 7.6.1.1	0.440	16.795	OK
Z-Z, +1.20D+1.60Lr	1.525	-X	Bottom	0.2592	ACI 7.6.1.1	0.440	16.795	OK
Z-Z, +1.20D+1.60Lr	1.525	+X	Bottom	0.2592	ACI 7.6.1.1	0.440	16.795	OK
Z-Z, +0.90D	0.4118	-X	Bottom	0.2592	ACI 7.6.1.1	0.440	16.795	OK
Z-Z, +0.90D	0.4118	+X	Bottom	0.2592	ACI 7.6.1.1	0.440	16.795	OK

One Way Shear X

Load Combination...	Vu @ -X	Vu @ +X	Vu:Max	Phi Vn	Vu / Phi*Vn	Status
+1.40D	3.01 psi	2.93 psi	3.01 psi	47.91 psi	0.06	OK
+1.20D+0.50Lr	4.01 psi	3.90 psi	4.01 psi	47.91 psi	0.08	OK
+1.20D	2.58 psi	2.51 psi	2.58 psi	47.91 psi	0.05	OK
+1.20D+1.60Lr	7.15 psi	6.97 psi	7.15 psi	47.91 psi	0.15	OK
+0.90D	1.93 psi	1.88 psi	1.93 psi	47.91 psi	0.04	OK

One Way Shear Z

Load Combination...	Vu @ -Z	Vu @ +Z	Vu:Max	Phi Vn	Vu / Phi*Vn	Status
+1.40D	3.01 psi	2.93 psi	3.01 psi	47.91 psi	0.06	OK
+1.20D+0.50Lr	4.01 psi	3.90 psi	4.01 psi	47.91 psi	0.08	OK
+1.20D	2.58 psi	2.51 psi	2.58 psi	47.91 psi	0.05	OK
+1.20D+1.60Lr	7.15 psi	6.97 psi	7.15 psi	47.91 psi	0.15	OK
+0.90D	1.93 psi	1.88 psi	1.93 psi	47.91 psi	0.04	OK

Two-Way "Punching" Shear

All units k

Load Combination...	Vu	Phi*Vn	Vu / Phi*Vn	Status
+1.40D	15.59 psi	150.00 psi	0.10	OK
+1.20D+0.50Lr	20.78 psi	150.00 psi	0.14	OK
+1.20D	13.36 psi	150.00 psi	0.09	OK
+1.20D+1.60Lr	37.11 psi	150.00 psi	0.25	OK
+0.90D	10.02 psi	150.00 psi	0.07	OK

LATERAL DESIGN

Announcement
ASCE 7-22 is now available.

Wileys Wl Rd, Blythe, CA 92225, USA

Latitude, Longitude: 33.6110475, -114.9017655

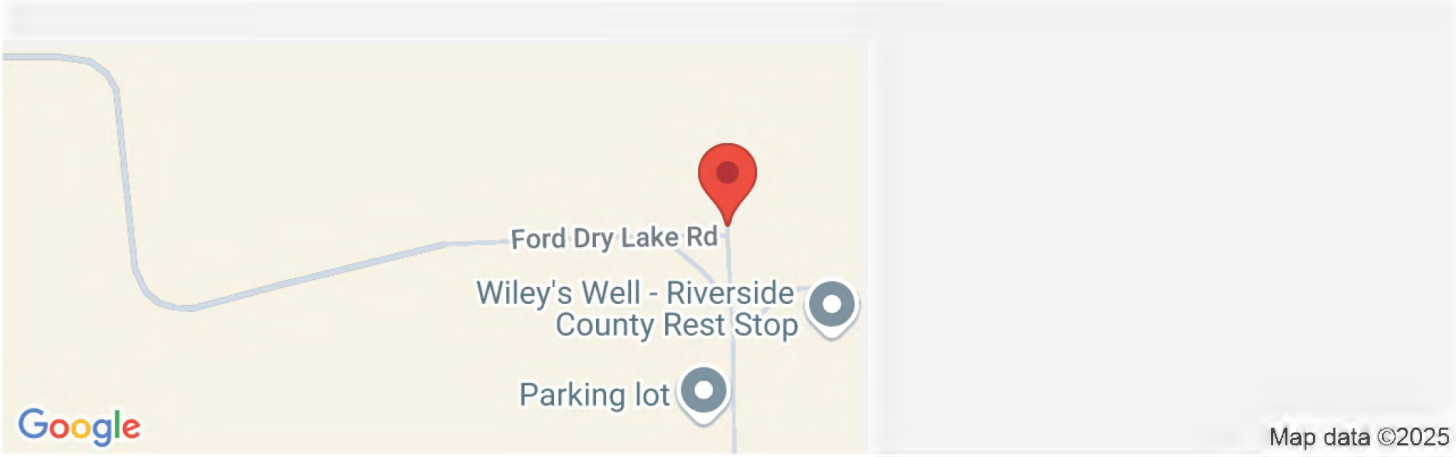

Date	8/4/2025, 7:51:31 AM
Design Code Reference Document	ASCE7-16
Risk Category	II
Site Class	D - Default (See Section 11.4.3)

Type	Value	Description
S_S	0.406	MCE_R ground motion. (for 0.2 second period)
S_1	0.19	MCE_R ground motion. (for 1.0s period)
S_{MS}	0.599	Site-modified spectral acceleration value
S_{M1}	0.421	Site-modified spectral acceleration value
S_{DS}	0.399	Numeric seismic design value at 0.2 second SA
S_{D1}	0.281	Numeric seismic design value at 1.0 second SA

Type	Value	Description
SDC	D	Seismic design category
F_a	1.475	Site amplification factor at 0.2 second
F_v	2.221	Site amplification factor at 1.0 second
PGA	0.179	MCE_G peak ground acceleration
F_{PGA}	1.441	Site amplification factor at PGA
PGA_M	0.258	Site modified peak ground acceleration
T_L	8	Long-period transition period in seconds
SsRT	0.406	Probabilistic risk-targeted ground motion. (0.2 second)
SsUH	0.428	Factored uniform-hazard (2% probability of exceedance in 50 years) spectral acceleration
SsD	1.5	Factored deterministic acceleration value. (0.2 second)
S1RT	0.19	Probabilistic risk-targeted ground motion. (1.0 second)
S1UH	0.202	Factored uniform-hazard (2% probability of exceedance in 50 years) spectral acceleration.
S1D	0.6	Factored deterministic acceleration value. (1.0 second)
PGAd	0.5	Factored deterministic acceleration value. (Peak Ground Acceleration)

Seismic Load

BUILDING CODE

2022 CALIFORNIA BUILDING CODE W/ LOCAL AMENDMENTS

Maximum Short Period Response:	S_S =	0.406	g (USGS)	
Maximum 1 Second Period Response:	S_1 =	0.19	g (USGS)	
Site Coefficient	F_a =	1.475	(USGS)	
Site Coefficient	F_v =	2.2	(USGS)	
MCE Spectral Response Acc for Short Period:	S_{MS} =	0.599	g (= F_a x S_s)	
MCE Spectral Response Acc for Short Period:	S_{M1} =	0.422	g (= F_v x S_1)	
Site Class:		D	(No Soils Report)	
Risk Category :		II	T 1.5-1	
Seismic Design Category:		D	Sec 11.6	
Important Factor:	I_e =	1.0	T 1.5-2	
5% Damped Design Spectral Response Acc at Short Period:	S_{DS} =	0.399	g (Eq 11.4-3)	(=2/3 x SMS)
5% Damped Design Spectral Response Acc at 1s Period:	S_{D1} =	0.281	g (Eq 11.4-4)	(=2/3 x SM1)
	T_a =	0.104	(C_t x H_n^x)	(Eq. 12.8-7)
	H_n =	9	ft	
Seismic Force Resisting System:		Steel Cantilever Column.		
Response Modification Factor:	R =	2.5	2.5	T 12.2-1
Overstrength Factor:	Ω_o=	2.5	2.5	T 12.2-1
Deflection Amplification Factor:	C_d =	2.5	2.5	T 12.2-1
Redundancey Factor:	ρ =	1.3		Sec. 12. 3. 4
Base Shear Coefficient: S_{DS} * I_e/R =	C_S =	0.16		g (LRFD)
$C_{S(Max.)}$ =S_{D1}/(T*(R/I_e)) =		1.08		
$C_{S(Min.)}$ =0.5*S_1/(R/I_e) =		0.04		
0.7*C_S =		0.11	g (ASD)	

KEYMAP - SEISMIC

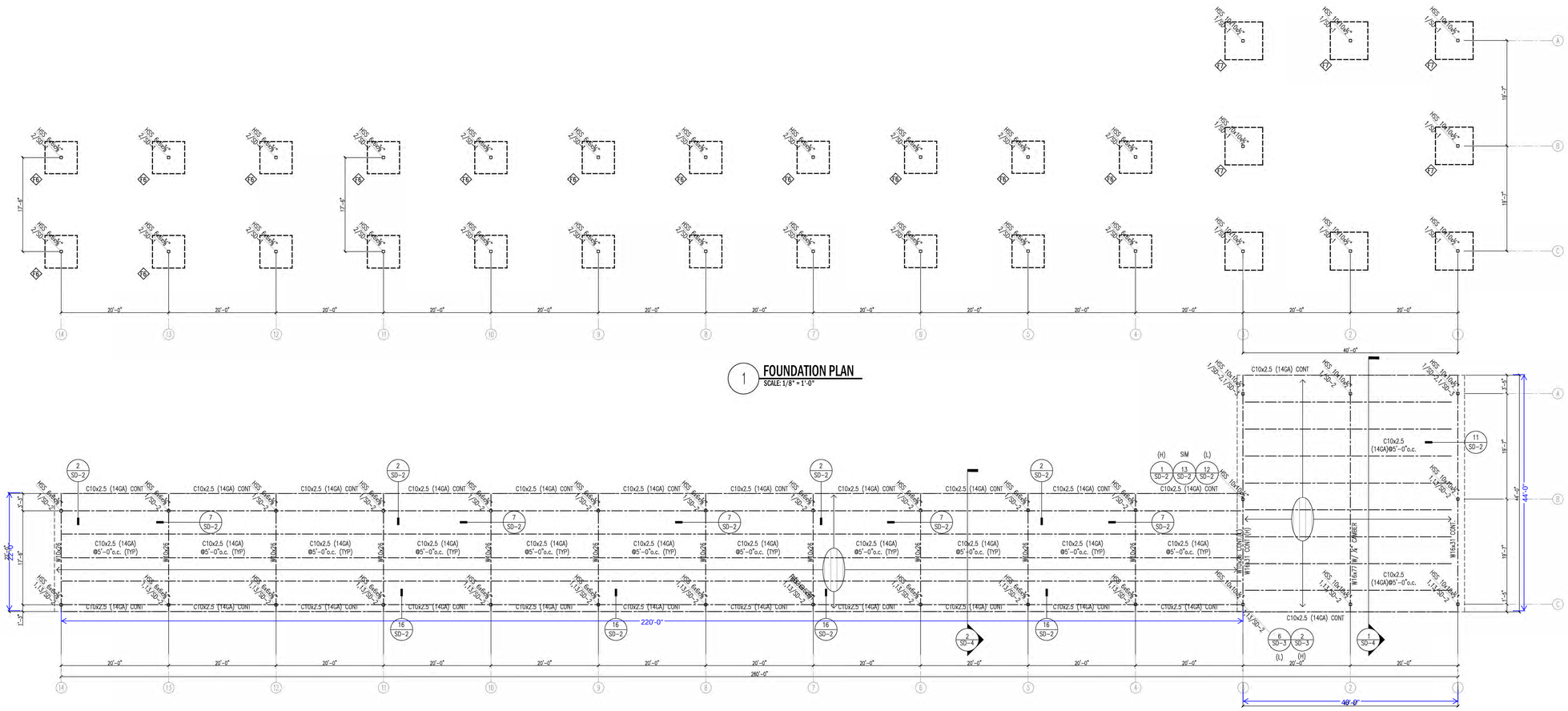

1 FOUNDATION PLAN
SCALE: 1/8" = 1'-0"

2 ROOF FRAMING PLAN
SCALE: 1/8" = 1'-0"

LEGENDS

- INDICATES STEEL POST, SIZE NOTED ON PLAN
- CONC.PAD FOOTING
- CONC. FOOTING
- ROOF
- WOOD BEAM/GIRDER
- ROOF RAFTER
- JOIST/RAFTER SPACING DIRECTION
- METAL DECKING, SEE SCHED.

CONCRETE FOUNDATION SCHED.		
NO.	DESCRIPTION	REINF.
F7	7'x7'x2'(DEPTH)	#6@6"o.c. EA. WAY T&B
F6	6'x6'x2' (DEPTH)	#6@6"o.c. EA. WAY T&B

NO.#	REMARKS	DATE

KTW SOLUTIONS, INC.

T: 310.986.2185
E-MAIL: TKIM@KTW-SOLUTIONS.COM

REGISTERED PROFESSIONAL ENGINEER TAEWON KIM No. C80632 Exp. 03/31/2027 STRUCTURAL CIVIL STATE OF CALIFORNIA

9/24/2025

REGISTERED PROFESSIONAL ENGINEER DENIS HURWITZ M21082 Exp. 6/27 MECHANICAL STATE OF CALIFORNIA

DESERT ENGINEERS
CONSULTING ENGINEERS
MECHANICAL, ELECTRICAL, PLUMBING AND STRUCTURAL DESIGN
760 / 568 / 9600
http://DESERTENGINEERS.COM

HEAVY EQUIPMENT COVERED PARKING (CANOPY#2)
GENESIS SOLAR SGN-7209
11995 Wiley's Well Road
Blythe, CA. 92225

DRAWN BY:	
DATE	07/28/25
SCALE	
JOB NO.	
SHEET	S-1
OF	SHEETS

KEYMAP - SEISMIC AREA

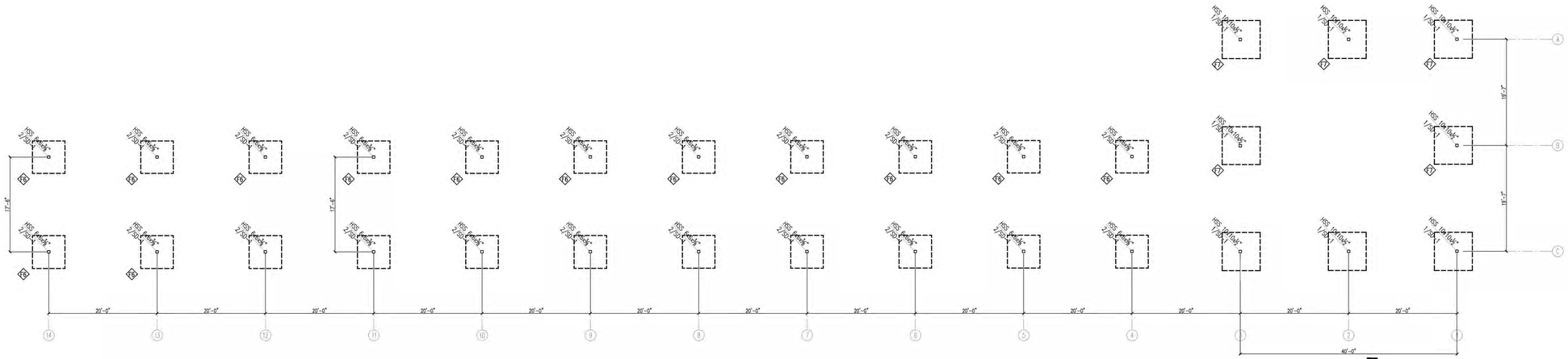

1 FOUNDATION PLAN
SCALE: 1/8" = 1'-0"

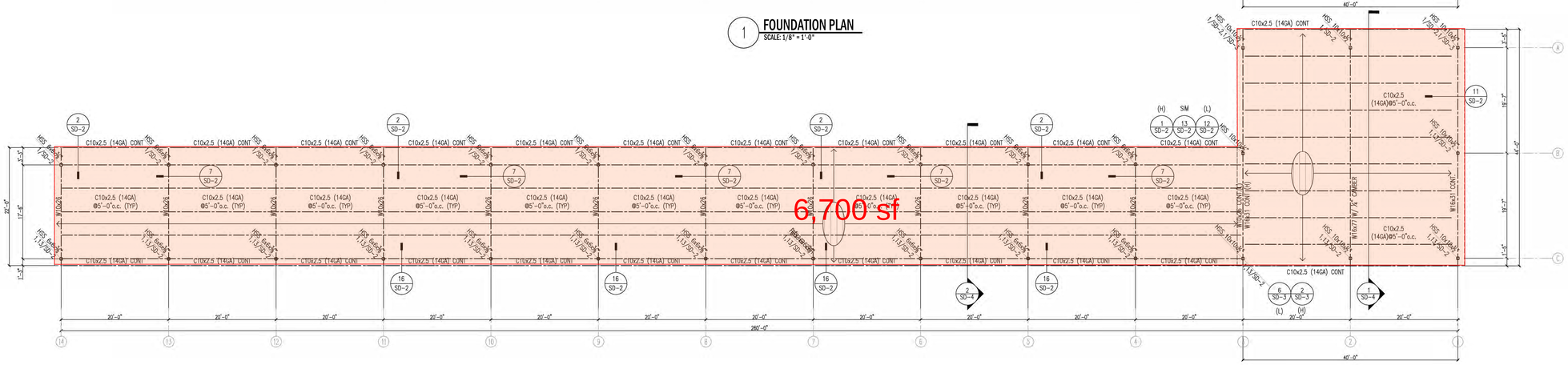

2 ROOF FRAMING PLAN
SCALE: 1/8" = 1'-0"

LEGENDS

- INDICATES STEEL POST, SIZE NOTED ON PLAN
- CONC.PAD FOOTING
- CONC. FOOTING
- ROOF
- WOOD BEAM/GIRDER
- ROOF RAFTER
- JOIST/RAFTER SPACING DIRECTION
- METAL DECKING, SEE SCHED.

CONCRETE FOUNDATION SCHED.		
NO.	DESCRIPTION	REINF.
P7	7'x7'x2'(DEPTH)	#6@6"o.c. EA. WAY T&B
P8	6'x6'x2' (DEPTH)	#6@6"o.c. EA. WAY T&B

NO.#	REMARKS	DATE

KTW SOLUTIONS, INC.

T: 310.986.2185
E-MAIL: TKIM@KTW-SOLUTIONS.COM

REGISTERED PROFESSIONAL ENGINEER TAEWON KIM No. C80632 Exp. 03/31/2027 CIVIL STATE OF CALIFORNIA
9/24/2025

REGISTERED PROFESSIONAL ENGINEER DENIS HURWITZ M21082 Exp. 6/27 MECHANICAL STATE OF CALIFORNIA

DESERT ENGINEERS
CONSULTING ENGINEERS
MECHANICAL, ELECTRICAL, PLUMBING AND STRUCTURAL DESIGN
760 / 566 / 9400
http://DESERTENGINEERS.COM

HEAVY EQUIPMENT COVERED PARKING (CANOPY#2)
GENESIS SOLAR SGN-7209
11995 Wiley's Well Road
Blythe, CA. 92225

DRAWN BY:	
DATE	07/28/25
SCALE	
JOB NO.	
SHEET	S-1
OF	SHEETS

Design Load (Sesmic Load)

VERTICAL DISTRIBUTION OF SEISMIC FORCES

k = 1 an exponent related to the structure period

C_s = 0.11

BASE SHEAR = 5.1 kips

BASE SHEAR = 9.9 kips

$$C_{vx} = \frac{w_x h_x^k}{\sum_{i=1}^{n} w_i h_i^k}$$

C_{vx} =

LEVEL X	h_x *(ft)*	h_x *(ft)*	h_x^k *(ft)*	*Area* *(ft²)*	*DL* *(psf)*	W_x *(kips)*	$W_x \times h_x^k$	$\frac{W_x \times h_x^k}{\Sigma wi \times h_i^k}$	F_x *(kips)*	F_x *(psf)*	*Accu.* F_x *(psf)*
Roof	21	21	21	1837	25	45.9	964	1.00	5.1	**2.8**	**2.8**
						45.9	964	1.00	5.1		

LEVEL X	h_x *(ft)*	h_x *(ft)*	h_x^k *(ft)*	*Area* *(ft²)*	*DL* *(psf)*	W_x *(kips)*	$W_x \times h_x^k$	$\frac{W_x \times h_x^k}{\Sigma wi \times h_i^k}$	F_x *(kips)*	F_x *(psf)*	*Accu.* F_x *(psf)*
Roof	12	12	12	3553	25	88.8	1066	1.00	9.9	**2.8**	**2.8**
				5390		88.8	1066	1.00	9.9		

Design Load (Sesmic Load)

HORIZONTAL DISTRIBUTION OF SEISMIC FORCES

Roof							
Grid	1		3	3		14	
Seismic Load		2.8			2.8		
Depth		40			220		
Length		44			22		
Shear Force	2459		2459	6763		6763	Sum 4919
Design Shear	**2459**		**2459**	**6763**		**6763**	**4919**
Diap. Force	61		61	31		31	

Roof							
Grid	A		C	B		C	
Seismic Load		2.8			2.8		
Depth		44			22		
Length		40			220		
Shear Force	2459		2459	6763		6763	Sum 4919
Design Shear	**2459**		**2459**	**6763**		**6763**	**4919**
Diap. Force	56		56	307		307	

Cantilever Column

Cs = 0.13

ρ = 1.3

Wall Weight, W_w = 20

S_{DS} = 1.162

Grid Line		*Seismic Force to Shearwall, F_w (lbs)*	*No. of Columns*	*Seismic Force to Shearwall, F_w (lbs)*	*Cs/cs*	*Seismic Force to Shearwall, F_w (lbs)*
Roof (EW)						
1		**2459**	3	3197	1	1066
3		**9222**	3	11989	1	3996
14		**6763**	2	7861	1	3931
A		**2459**	3	3197	1	1066
B		**6763**	10	7861	1	786
C		**2459**	11	3197	1	291