DOCKETED	
Docket Number:	01-AFC-24C
Project Title:	Palomar Energy Project Compliance
TN #:	265488
Document Title:	HRSG Isolation Valves
Description:	N/A
Filer:	Jason Dobbs
Organization:	San Diego Gas and Electric
Submitter Role:	Applicant
Submission Date:	8/8/2025 3:46:16 PM
Docketed Date:	8/8/2025

PETITION FOR NEW PROJECT APPROVAL TO INSTALL HRSG ISOLATION VALVES AT THE PALOMAR ENERGY CENTER (01-AFC-24C)

By:

SAN DIEGO GAS & ELECTRIC (SDG&E) SAN DIEGO, CALIFORNIA

Submitted to:

CALIFORNIA ENERGY COMMISSION (CEC)

August 8, 2025

PETITION FOR NEW PROJECT APPROVAL TO INSTALL HRSG ISOLATION VALVES AT THE PALOMAR ENERGY CENTER (01-AFC-24C)

1.0 INTRODUCTION

San Diego Gas & Electric (SDG&E or "the applicant") is filing this petition for a proposed project design as described in the Final Decision for the Palomar Energy Center (PEC), Docket 01-AFC-24 pursuant to 20 Cal. Code Regs. Section 1769(a)(1). PEC is a combined cycle power plant with 2 Heat Recovery Steam Generator (HRSG) units that provide high pressure steam to the Steam Turbine Generator (STG) for operation. The HRSG's are designed with a connected Hot Reheat (HRH) and Cold Reheat (CRH) steam system. SDG&E is proposing to install isolation valves for both HRSGs and erect working platforms to access the valves at PEC. The valves and working platforms will ensure system reliability and minimize operational down time. No changes in Conditions of Certification are necessary.

2.0 DESCRIPTION OF PROPOSED MODIFICATION (Sec. 1769(a)(1)(A))

Further details of the proposed facilities are as follows:

<u>HRSG Isolation Valve Installation</u>. SDG&E is filing this petition for a proposed project design to install 2 isolation valves for the HRH system, install 2 isolation valves for the CRH system, and install working platforms for each of the new valves to support inspection, maintenance and repair of the valves. This will allow operations and maintenance crews to isolate an individual HRSG in the event of HRH steam system equipment failure and perform repairs while maintaining operational availability of the non-impacted HRSG. SDG&E is proposing to install the mentioned valve and working platforms to support system reliability. No changes in Conditions of Certification are necessary. Project information (drawings) of the new systems are attached in Appendix 1.

3.0 NECESSITY (Sec. 1769(a)(1)(B))

The installation of the HRSG Isolation Valves will improve facility reliability.

4.0 TIMING (Sec. 1769(a)(1)(C) and (D))

SDG&E assumed ownership of the PEC about three years after issuance of the Final Decision and certification to Palomar Energy, LLC. Since taking ownership of the plant in 2006, SDG&E has continued to review the engineering and design of the plant in order to better serve the needs of SDG&E ratepayers. SDG&E has also benefited from experience gained operating the plant since assuming ownership. This "fine tuning" could not have taken place during the licensing proceeding because SDG&E was not the applicant, the plant was not yet operating, and Palomar Energy brought its own objectives to the development of the project for the merchant market. The addition of this expansion does not change or undermine the assumptions, rationale, findings, or other bases of the Final Decision. The change complies with all laws, ordinances, regulations and standards and does not have a significant environmental impact, as further described below.

5.0 ANALYSIS OF THE EFFECT OF THE MODIFICATIONS ON THE ENVIRONMENT (Sec. 1769(a)(1)(E))

The requested equipment change will have no significant effects on any of the technical areas analyzed in the August 2003 Final Commission Decision. Please see Table 1 below.

Table 1

Review of Effects of Installation and Operation of Nitrogen Concentrator System

TECHNICAL AREA	**SIGNIFICANT ENVIRONMENTAL IMPACT (Y/N)?**		**NOTES**
AIR QUALITY		N	no change
CULTURAL RESOURCES		N	Area for construction is prior filled area
EFFICIENCY		N	No impact
GEOLOGICAL HAZARDS		N	No change
HAZARDOUS MATERIALS HANDLING		N	No change
LAND USE		N	No change
NOISE		N	No Change
PALEONTOLOGICAL RESOURCES		N	Area for construction is prior filled area
BIOLOGICAL RESOURCES		N	Area previously disturbed.

Petition for Change (HRSG Isolation Valves) August 8, 2025

TECHNICAL AREA	SIGNIFICANT ENVIRONMENTAL IMPACT (Y/N)?		NOTES
PUBLIC HEALTH		N	no change
RELIABILITY		N	Improve
SOCIOECONOMICS		N	No change
SOILS		N	No change
TRAFFIC AND TRANSPORTATION		N	Construction traffic minimal
T-LINE SAFETY AND NUISANCE		N	No change
TRANSMISSION SYSTEM ENGINEERING		N	No change
VISUAL RESOURCES		N	No Change
WASTE MANAGEMENT		N	No change
WATER RESOURCES		N	No change
WORKER SAFETY		N	No change

6.0 COMPLIANCE WITH LAWS, ORDINANCES, REGULATIONS AND STANDARDS (LORS) (Sec. 1769(a)(1)(F))

The proposed improvements will not affect compliance with any other LORS requirement. Therefore, the proposed modification is not anticipated to impact SDG&E's ability to comply with the applicable LORS, as listed in Appendix A of the Commission Final Decision.

7.0 POTENTIAL EFFECTS ON PUBLIC AND NEARBY PROPERTY OWNERS (Sec. 1769(a)(1)(G and I))

The requested expansion will not have any environmental impacts and will comply with all applicable LORS. Thus, the proposed equipment change is not anticipated to affect nearby property owners or parties in the application proceedings or the public

8.0 LIST OF PROPERTY OWNERS (Sec. 1769(a)(1)(H))

A list of property owners 1,000 feet of the plant site has previously been provided to the Commission CPM.

9.0 SUMMARY OF REQUEST

As demonstrated above, the HRSG Isolation Valves and work platforms will not have an adverse effect on the public or the environment. The change will not affect compliance with the applicable LORS. Accordingly, SDG&E requests that the Energy Commission Staff expedite review of this petition, and request Commission approval of the proposed modified conditions in accordance with Title 20 CCR Section 1769.

Respectfully Submitted,

Jason T. Dobbs
Generation Compliance Advisor

Dated: August 8, 2025

APPENDIX 1 (PROJECT INFORMATION)

NPS	REF NO	ØA	B	C	D	E	ØF	ØG	J	K	Cv	VALVE	ACTUAT	TOTAL
												WEIGHT (LB)		
24	8890-268	19.00	55.00	94.63	114.69	150.00	3.00	3.75	13.44	82.32	29682	11270	450	11720
DN											Kv	WEIGHT (KG)		
600		483	1397	2404	2913	3810	76	95	341	2091	25675	5112	204	5316

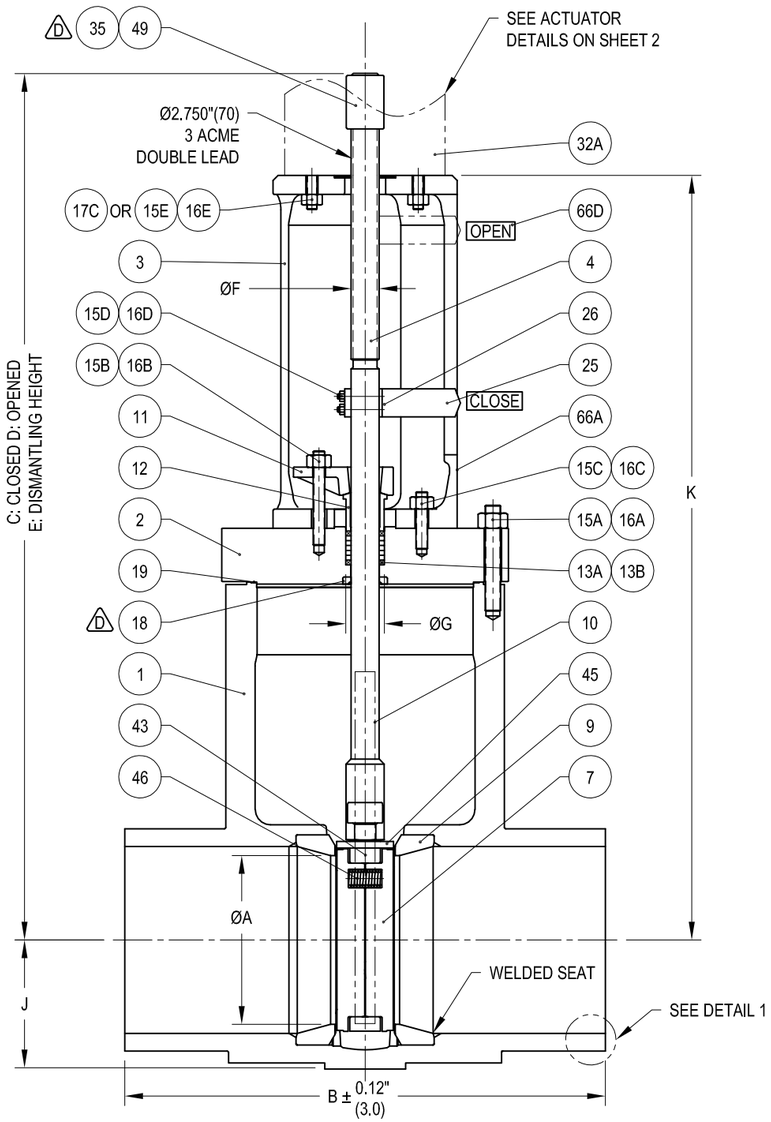

ITEM	NPS	FIGURE NUMBER	TAG NUMBER	DESIGN CONDITIONS
143,144,145,146	24	B24-2144B-67US-M	YV03254, YV03234	450 PSIG @ 1067°F

VELAN MADE IN B16 CASE 18

SIZE:	CLASS:	MAX.P/T:
BODY:	STEM:	PSIG @ 100°F
DISC:	SEAT:	bar @ 38°C
		AO:
FIG:		MOD:

66A NAME PLATE

66B

TAG PLATE PERMANENTLY ATTACHED TO VALVE

66E

CAUTION!

THIS VALVE IS POSITION SEATED, NOT TORQUE SEATED.
TO SET IT IN CLOSED POSITION:
-ALIGN THE TORQUE ARM WITH THE "CLOSE" ARROW.
-BRING THE STROKE LIMITER, LOCATED ABOVE THE STEM DRIVE NUT, IN CONTACT WITH IT AND LOCK IT IN POSITION
(FOR MOTOR ACTUATED VALVES, BACK-UP THE LIMITER ABOUT A QUARTER-TURN AND LOCK)

STROKE LIMITER PLATE

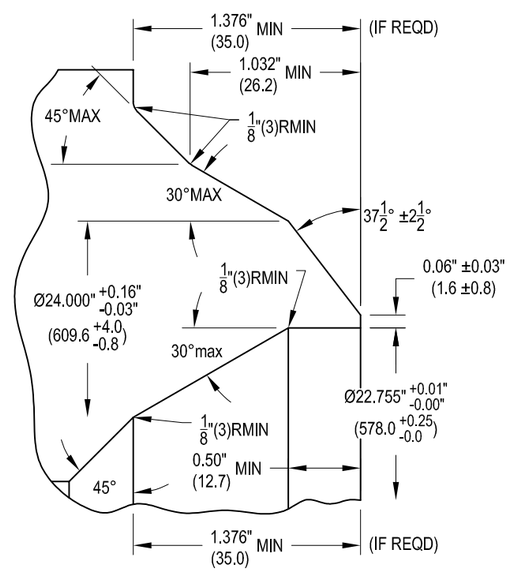

BUTTWELD END MACHINING
24" SCH 40 t: 0.688" (17.5)
PER ASME B16.25, FIG. 2C

MATERIAL LIST

PART	DESCRIPTION	QTY	MATERIAL	MATL SPEC	REMARKS
1	BODY	1	F91 TY 2	ASTM A182	
D 2	BONNET	1	F91 TY 2	ASTM A182	
3	YOKE	1	WCB	ASTM A216	
4	STEM	1	616HT	ASTM A565	
7	DISC	2	F91	ASTM A182	CoCr FACE
9	SEAT	2	F91	ASTM A182	CoCr FACE
10	DISC GUIDE	2	GR 91 / F91	ASTM A387 / A182	
11	PACKING FLANGE	1	WCB	ASTM A216	ALT: GR 70 / A516
12	GLAND BUSHING	1	304 / 316	ASTM A479	
13A	PACKING RING (END)	2	BRAIDED GRAPHITE		NO TEFLON
13B	PACKING RING (INT)	5	DIE-FORMED FLEXIBLE GRAPHITE		
15A	STUD	20	GR B7	ASTM A193	
15B	STUD	2	GR B7	ASTM A193	
15C	STUD	8	GR B7	ASTM A193	
15D	STUD	4	GR B7	ASTM A193	
15E	STUD	8	GR B7	ASTM A193	ALT: 17C (CAP SCREW)
16A	NUT	20	GR 2H	ASTM A194	
16B	NUT	2	GR 2H	ASTM A194	
16C	NUT	8	GR 2H	ASTM A194	
16D	NUT	4	GR 2H	ASTM A194	
16E	NUT	8	GR 2H	ASTM A194	ALT: 17C (CAP SCREW)
17C	HSH CAP SCREW	8	ALLOY STEEL	ASTM A574	ALT: 15E / 16E (STUD / NUT)
D 18	BACKSEAT	1	F91	ASTM A182	CoCr FACE
19	GASKET	1	SS / GRAPHITE		SPIRAL WOUND
25	TORQUE ARM	1	CS	ASTM A36 / A108	ALT: GR 70 / A516
26	KEY	1	STEEL	AISI 4140	
32A	ELECTRIC ACTUATOR	1	LIMITORQUE	MODEL: MXb-40 / V35	FA25
32B	ELECTRIC ACTUATOR	2	LIMITORQUE	MODEL: MXb-05	FA10 (FOR BYPASS)
D 35	SET SCREW	1	STEEL	COMMERCIAL	
43	DISC CARRIER	1	GR 22 / F91	ASTM A387 / A182	CoCr FACE
45	RETAINING PLATE	1	616HT	ASTM A565	ALT: XM-19 / A182
46	SPRING	3	INCONEL X750	AMS 5699	HEAT TREAT PER PARA 3.3.4.1
D 49	STROKE LIMITER	1	410	ASTM A479	COND. 2
50	STEM COVER	1	GR A / GR B	ASTM A53 / A106	
65	BY-PASS VALVE	2	F91	ASTM A182	W05-8/9076Z-34US-M
66A	NAME PLATE	1	302 / 304	ASTM A240	
66B	TAG PLATE	1	302 / 304	ASTM A240	
66D	POSITION INDICATOR PLATE	2	302 / 304	ASTM A240	
D 66E	STROKE LIMITER PLATE	1	302 / 304	ASTM A240	
98	ELBOW	3	F91	ASTM A182	Ø1" 6000#
99	TEE CONNECTION	1	F91	ASTM A182	Ø1" 6000#
132	EQUALIZER/BY-PASS PIPING	SET	P91	ASTM A335	Ø1" SCH 80
139	GUSSET	4	GR 91	ASTM A387	2 EACH.

NOTE:
1. VALVES DESIGNED IN ACCORDANCE WITH ASME B16.34 AND B16 CASE 18 FOR F91 TY 2 MATERIAL.
2. ALL DIMENSIONS SHOWN IN PARENTHESIS ( ) ARE IN MM.
3. VALVE ORIGINALLY SUPPLIED ON VELAN DWG. "P012-410420-E05".

SEE SHEET 2 FOR REVISION DESCRIPTION

CUST NAME: FERGUSON INDUSTRIAL
CUST ORDER NO: G2648-699

PROJECT NAME:
SAN DIEGO PALOMAR ENERGY, CA, USA

VELAN

BOLTED BONNET PARALLEL SLIDE VALVE (FORGED)
C / W ELECTRIC ACTUATOR

VELAN REF: 050-0055288
SCALE: NTS
NPS: 24 (DN 600)
CLASS: 600 (PN 100)

THIS DOCUMENT AND ALL INFORMATION HEREIN IS THE PROPERTY OF VELAN. IT IS CONFIDENTIAL, SUBJECT TO RETURN UPON REQUEST AND SHALL NOT BE REPRODUCED OR IMPARTED TO A THIRD PARTY.
CE DOCUMENT ET TOUS LES RENSEIGNEMENTS QU'IL RENFERME SONT LA PROPRIÉTÉ DE VELAN. IL S'AGIT D'UN DOCUMENT CONFIDENTIEL, À REMETTRE SUR DEMANDE, QUI NE DOIT PAS ÊTRE COPIÉ OU TRANSMIS À UN TIERS.

DWG NUMBER: 050-0055288-002
REV: D
SHT: 1 OF 2

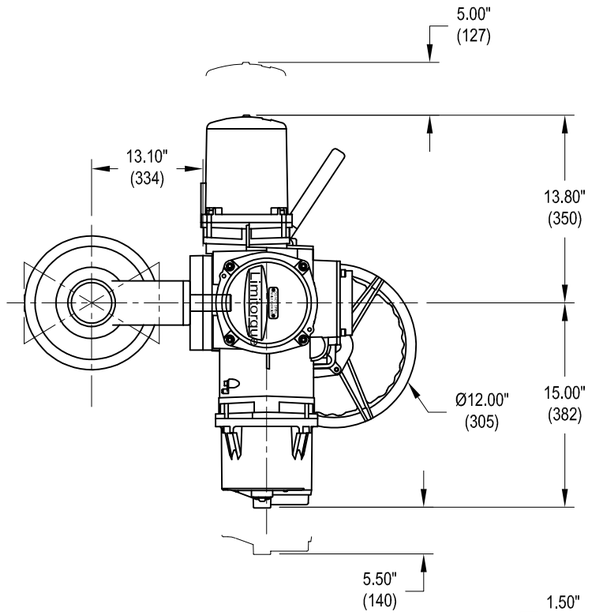

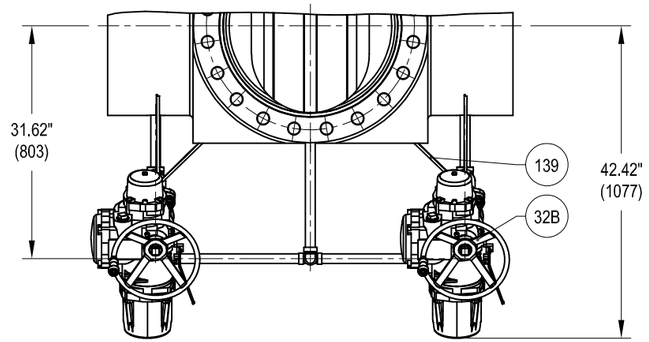

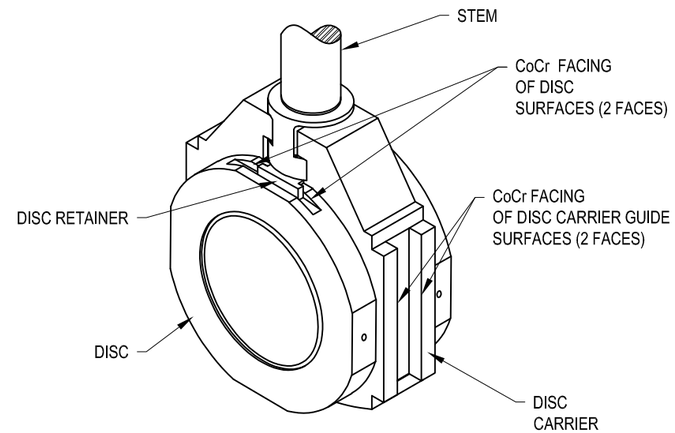

DETAIL 2
DETAIL OF DISC / DISC GUIDE
HARDFACING REQUIREMENTS

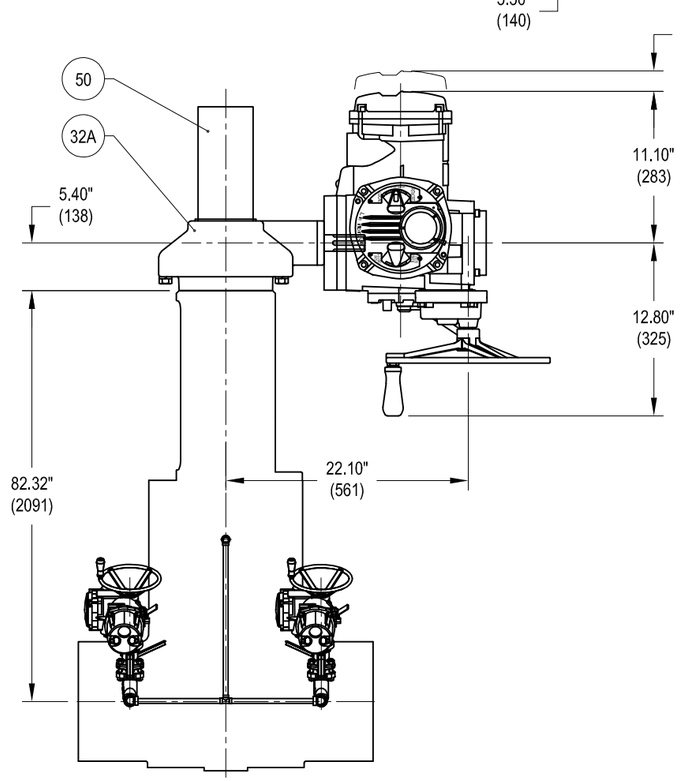

ACTUATOR OUTLINE DIMENSIONS

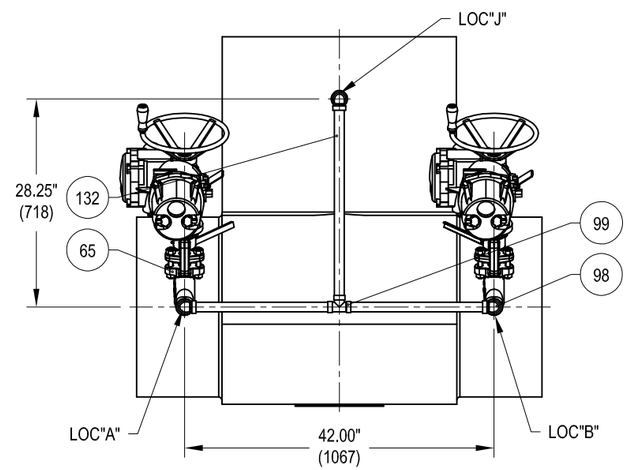

EQUALIZER AND BYPASS ARRANGEMENT
(REF NO.: 9439-B79)

REV	REVISION DESCRIPTION	DRAWN	APVD	IR CERT
		YYYY-MM-DD		
D	PART 2: 'CoCr BACKSEAT' REMOVED; PARTS 18, 35, 49 & 66E ADDED; PART 66F REMOVED.	G.IALAMOV 2025-05-21	E. CHOI 2025-05-21	D.PATEL 2025-05-21
C	PART 2: 'CoCr BACKSEAT' ADDED TO REMARKS; PART 10: 'CoCr FACE' REMOVED; PART 18 REMOVED (INTEGRAL BACKSEAT); PARTS 35, 49 & 66E REMOVED (NO STROKE LIMITER NEEDED); PART 66F ADDED; DETAIL 2 REVISED (H/F DETAIL).	G.IALAMOV 2025-04-29	E. CHOI 2025-04-29	D. MAULIK 2025-05-06
B	PART 46: PARA 3.3.4.1 WAS 3.3.3.1; ADDED PART 139; EQUALIZER AND BYPASS ARRANGEMENT: VIEW UPDATED, REFERENCE NO WAS TBA & ADDED DIMENSIONS.	G.IALAMOV 2025-04-01	E. CHOI 2025-04-01	D.PATEL 2025-04-08
A	NPS 24 WAS 26; DIM 'J' WAS 15.62"; BODY PROFILE REVISED TO OPEN DIE BODY.	G.IALAMOV 2025-02-06	E.CHOI 2025-02-06	D.PATEL 2025-02-06
-	FIRST ISSUE	G.IALAMOV 2025-01-02	E.CHOI 2025-01-06	D.PATEL 2025-01-07

VELAN

THIS DOCUMENT AND ALL INFORMATION HEREIN IS THE PROPERTY OF VELAN, IT IS CONFIDENTIAL, SUBJECT TO RETURN UPON REQUEST AND SHALL NOT BE REPRODUCED OR IMPARTED TO A THIRD PARTY. CE DOCUMENT ET TOUS LES RENSEIGNEMENTS QU'IL RENFERME SONT LA PROPRIÉTÉ DE VELAN. IL S'AGIT D'UN DOCUMENT CONFIDENTIEL, À REMETTRE SUR DEMANDE, QUI NE DOIT PAS ÊTRE COPIÉ OU TRANSMIS À UN TIERS.

SCALE	DWG NUMBER	REV D
NTS	050-0055288-002	SHT 2 OF 2

NPS	REF NO	ØA	B	C	D	E	ØF	ØG	J	K	Cv	VALVE	ACTUAT	TOTAL
												WEIGHT (LB)		
20	9799-789	16.50	47.00	89.69	107.06	140.00	2.75	3.75	12.63	74.75	22000	5900	450	6350
DN											Kv	WEIGHT (KG)		
500		419	1194	2278	2719	3556	70	95	321	1899	19030	2676	204	2880

NOTE:
1. VALVES DESIGNED IN ACCORDANCE WITH ASME B16.34.
2. ALL DIMENSIONS SHOWN IN PARENTHESIS ( ) ARE IN MM.
3. VALVE ORIGINALLY SUPPLIED ON VELAN DWG. "P012-410420-E04".

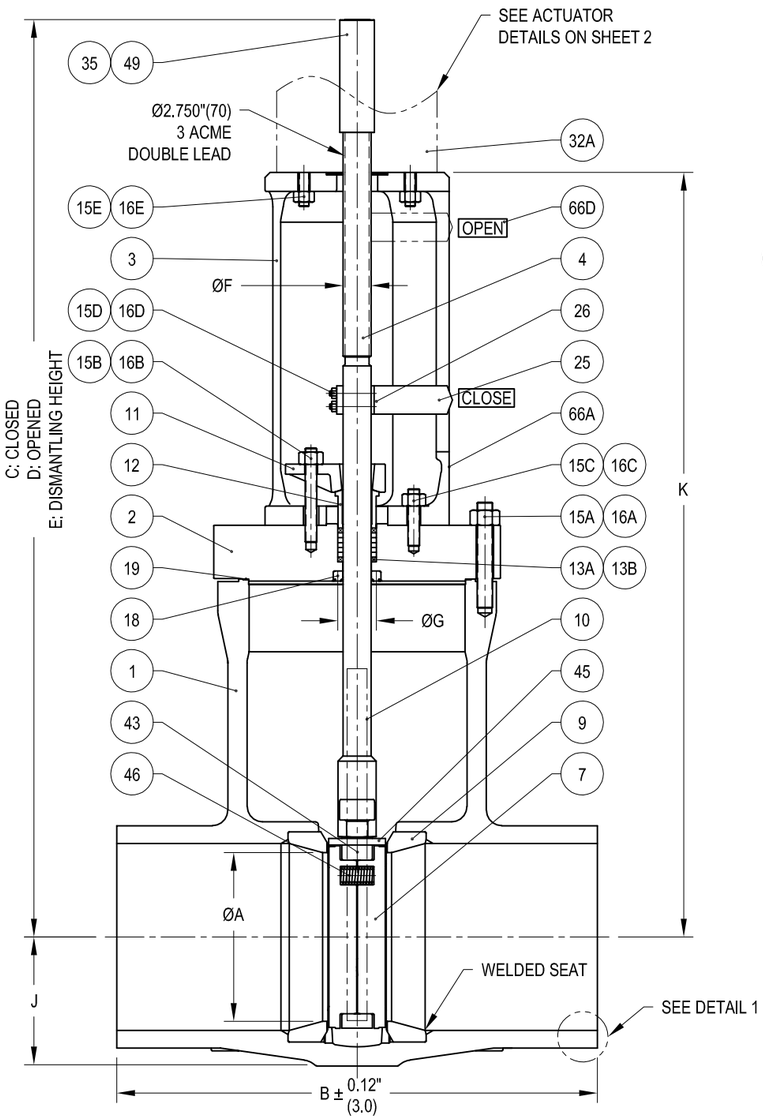

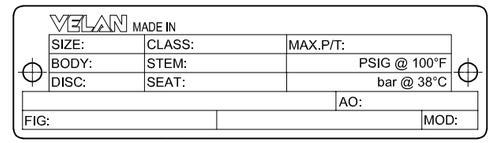

66A NAME PLATE

66B TAG PLATE PERMANENTLY ATTACHED TO VALVE

66E CAUTION!
THIS VALVE IS POSITION SEATED, NOT TORQUE SEATED.
TO SET IT IN CLOSED POSITION:
-ALIGN THE TORQUE ARM WITH THE "CLOSE" ARROW.
-BRING THE STROKE LIMITER, LOCATED ABOVE THE STEM DRIVE NUT, IN CONTACT WITH IT AND LOCK IT IN POSITION (FOR MOTOR ACTUATED VALVES, BACK-UP THE LIMITER ABOUT A QUARTER-TURN AND LOCK)

STROKE LIMITER PLATE

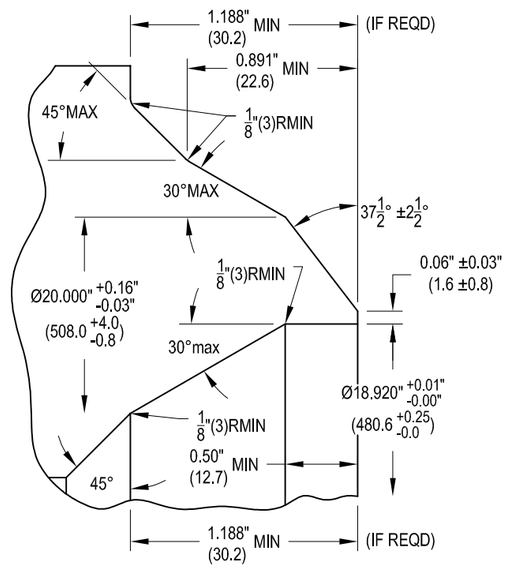

BUTTWELD END MACHINING
20" SCH 40 t: 0.594" (15.1)
PER ASME B16.25, FIG 2C

MATERIAL LIST

PART	DESCRIPTION	QTY	MATERIAL	MATL SPEC	REMARKS
1	BODY	1	WCB	ASTM A216	
2	BONNET	1	CS	ASTM A105	
3	YOKE	1	WCB	ASTM A216	
4	STEM	1	410	ASTM A479	COND. 2
7	DISC	2	CS	ASTM A105	CoCr FACE
9	SEAT	2	CS / GR B	ASTM A105 / A106	CoCr FACE
10	DISC GUIDE	2	GR 70	ASTM A516	
11	PACKING FLANGE	1	WCB	ASTM A216	ALT: GR 70 / A516
12	GLAND BUSHING	1	CS	ASTM A36 / A108	
13A	PACKING RING (END)	2	BRAIDED GRAPHITE		
13B	PACKING RING (INT)	5	DIE-FORMED FLEXIBLE GRAPHITE		
15A	STUD	24	GR B7	ASTM A193	
15B	STUD	2	GR B7	ASTM A193	
15C	STUD	8	GR B7	ASTM A193	
15D	STUD	4	GR B7	ASTM A193	
15E	STUD	8	GR B7	ASTM A193	
16A	NUT	24	GR 2H	ASTM A194	
16B	NUT	2	GR 2H	ASTM A194	
16C	NUT	8	GR 2H	ASTM A194	
16D	NUT	4	GR 2H	ASTM A194	
16E	NUT	8	GR 2H	ASTM A194	
18	BACKSEAT	1	CS	ASTM A105	CoCr FACE
19	GASKET	1	347 & GRAPHITE		SPIRAL WOUND
25	TORQUE ARM	1	CS	ASTM A36 / A108	ALT: GR 70 / A516
26	KEY	1	STEEL	AISI 4140	
32A	ELECTRIC ACTUATOR	1	LIMITORQUE	MODEL: MXb-40 / V35	FA25
32B	ELECTRIC ACTUATOR	2	LIMITORQUE	MODEL: MXb-05	FA10 (FOR BYPASS)
35	SET SCREW	1	STEEL	COMMERCIAL	
43	DISC CARRIER	1	GR 70	ASTM A516	CoCr FACE
45	RETAINING PLATE	1	410	ASTM A479	COND. 2
46	SPRING	3	302	ASTM A313	
49	STROKE LIMITER	1	410	ASTM A479	COND. 2
50	STEM COVER	1	GR A / GR B	ASTM A53 / A106	
65	BY-PASS VALVE	2	CS	ASTM A105	W05-8/9076Z-02TS-M
66A	NAME PLATE	1	302 / 304	ASTM A240	
66B	TAG PLATE	1	302 / 304	ASTM A240	
66D	POSITION INDICATOR PLATE	2	302 / 304	ASTM A240	
66E	STROKE LIMITER PLATE	1	302 / 304	ASTM A240	
99	TEE CONNECTION	1	CS	ASTM A105	Ø1" 6000#
132	EQUALIZER/BY-PASS PIPING	SET	GR B	ASTM A106	Ø1" SCH 80
139	GUSSET	4	CS	ASTM A36 / 44W	2 EACH.

REV	REVISION DESCRIPTION	DRAWN	APVD	IR CERT
		YYYY-MM-DD		
B	PART 10: "CoCr FACE" REMOVED; PART 43: "CoCr FACE" ADDED.	G.IALAMOV 2025-04-29	E. CHOI 2025-04-29	D. MAULIK 2025-05-06
A	ADDED PART 139; EQUALIZER AND BYPASS ARRANGEMENT: VIEW UPDATED, REFERENCE NO WAS TBA & ADDED DIMENSIONS.	G.IALAMOV 2025-04-01	E. CHOI 2025-04-01	D.PATEL 2025-04-08
-	FIRST ISSUE	G.IALAMOV 2025-01-02	E.CHOI 2025-01-06	D.PATEL 2025-01-07

CUST NAME: FERGUSON INDUSTRIAL
CUST ORDER NO: G2648-699

PROJECT NAME:
SAN DIEGO PALOMAR ENERGY, CA, USA

VELAN

BOLTED BONNET PARALLEL SLIDE VALVE (CAST)
C / W ELECTRIC ACTUATOR

VELAN REF: 050-0055288
SCALE: NTS
NPS: 20 (DN 500)
CLASS: 600 (PN 100)

THIS DOCUMENT AND ALL INFORMATION HEREIN IS THE PROPERTY OF VELAN. IT IS CONFIDENTIAL, SUBJECT TO RETURN UPON REQUEST AND SHALL NOT BE REPRODUCED OR IMPARTED TO A THIRD PARTY.
CE DOCUMENT ET TOUS LES RENSEIGNEMENTS QU'IL RENFERME SONT LA PROPRIÉTÉ DE VELAN. IL S'AGIT D'UN DOCUMENT CONFIDENTIEL, À REMETTRE SUR DEMANDE, QUI NE DOIT PAS ÊTRE COPIÉ OU TRANSMIS À UN TIERS.

DWG NUMBER: 050-0055288-001
REV: B
SHT: 1 OF 2

ITEM	NPS	FIGURE NUMBER	TAG NUMBER	DESIGN CONDITIONS
70, 71, 72, 73	20	B22-2144C-02TS-M	YV03154, YV03134	495 PSIG @ 775°F

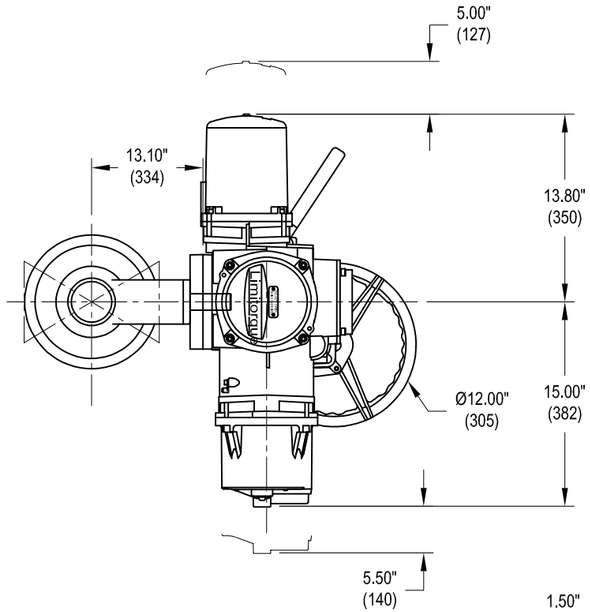

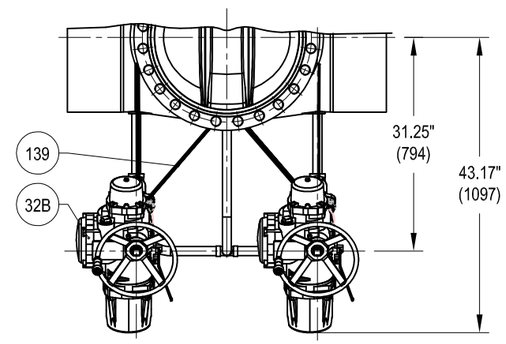

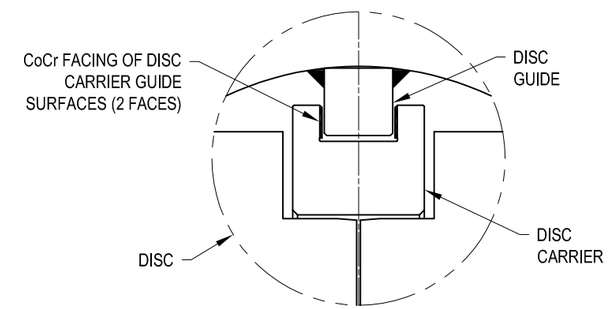

DETAIL OF DISC / DISC GUIDE HARDFACING
REQUIREMENTS

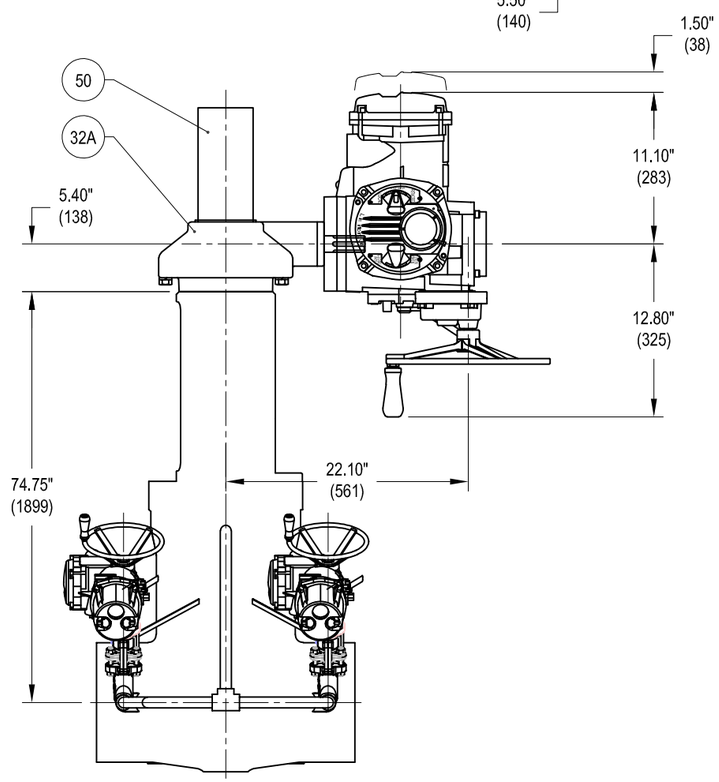

ACTUATOR OUTLINE DIMENSIONS

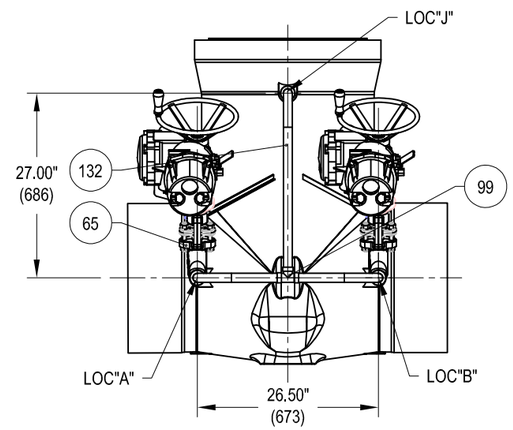

EQUALIZER AND BYPASS ARRANGEMENT
(REF NO.: 9439-B75)

VELAN

THIS DOCUMENT AND ALL INFORMATION HEREIN IS THE PROPERTY OF VELAN, IT IS CONFIDENTIAL, SUBJECT TO RETURN UPON REQUEST AND SHALL NOT BE REPRODUCED OR IMPARTED TO A THIRD PARTY. CE DOCUMENT ET TOUS LES RENSEIGNEMENTS QU'IL RENFERME SONT LA PROPRIÉTÉ DE VELAN, IL S'AGIT D'UN DOCUMENT CONFIDENTIEL, À REMETTRE SUR DEMANDE, QUI NE DOIT PAS ÊTRE COPIÉ OU TRANSMIS À UN TIERS.

SCALE	DWG NUMBER	REV A
NTS	050-0055288-001	SHT 2 OF 2

PROJECT INFORMATION

PROJECT DATA

PROJECT DESCRIPTION:
ADD 2 NEW EXTERIOR MAINTENANCE PLATFORMS ON THE STEAM TURBINE PIPE RACK AND 1 NEW EXTERIOR MAINTENANCE PLATFORM TO EACH HRSG PIPE RACK (4 PLATFORMS TOTAL).

APPLICANT/OWNER:
SEMPRA UTILITIES – PALOMAR ENERGY CENTER
2300 HARVESON PLACE, SD1473
ESCONDIDO, CA 92029

APPLICANT'S REPRESENTATIVE/ENGINEER:
MARTIN AND LIBBY
4452 GLACIER AVE
SAN DIEGO, CA 92120
TEL: (619) 280–9307
FAX: (619) 284–3533
CONTACT:
EMAIL:

ASSESSOR'S PARCEL NUMBER:
232–591–01–00

APPLICABLE CODES

WORK SHALL BE IN COMPLIANCE WITH THE FOLLOWING APPLICABLE CODES:

1. 2007 CALIFORNIA BUILDING CODE (CBC) BASED ON THE 2006 EDITION OF THE INTERNATIONAL BUILDING CODE (IBC).
2. 2007 CALIFORNIA PLUMBING CODE (CPC) BASED ON THE 2006 UNIFORM PLUMBING CODE (UPC).
3. 2007 CALIFORNIA MECHANICAL CODE (CMC) BASED ON THE 2006 UNIFORM MECHANICAL CODE (UMC).
4. 2007 CALIFORNIA ELECTRICAL CODE (CEC) BASED ON THE 2005 NATIONAL ELECTRICAL CODE (NEC).
5. 2007 CALIFORNIA FIRE CODE (CFC) 2007 EDITION BASED ON THE 2006 UFC.

CONSULTANTS

OWNER:
SEMPRA UTILITIES – PALOMAR ENERGY CENTER
2300 HARVESON PLACE, SD1473
ESCONDIDO, CA 92029

STRUCTURAL ENGINEER:
MARTIN AND LIBBY
4452 GLACIER AVE
SAN DIEGO, CA 92120
TEL: (619) 280–9307
FAX: (619) 284–3533
CONTACT:
EMAIL:

SHEET INDEX

SHEET NUMBER	DESCRIPTION	REV	DATE
	ARCHITECTURAL SITE DRAWINGS		
T-1	TITLE SHEET		
T-2	(N) PLATFORM LOCATION PLAN		
	STRUCTURAL DRAWINGS		
S-1	GENERAL NOTES		
S-2	TYPICAL DETAILS		
S-3	PIPE RACK PLATFORM LOCATION PLAN		
S-4	PLANS		
S-5	PLANS		
S-6	ELEVATIONS		

VICINITY MAP

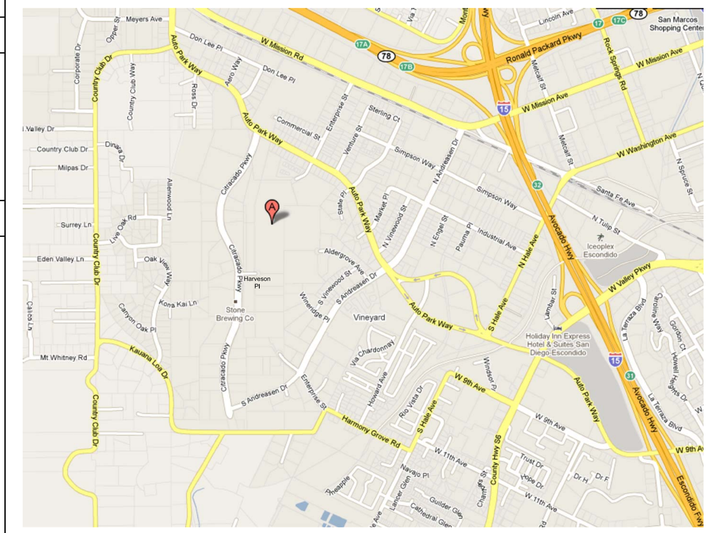

VICINITY MAP
NOT TO SCALE

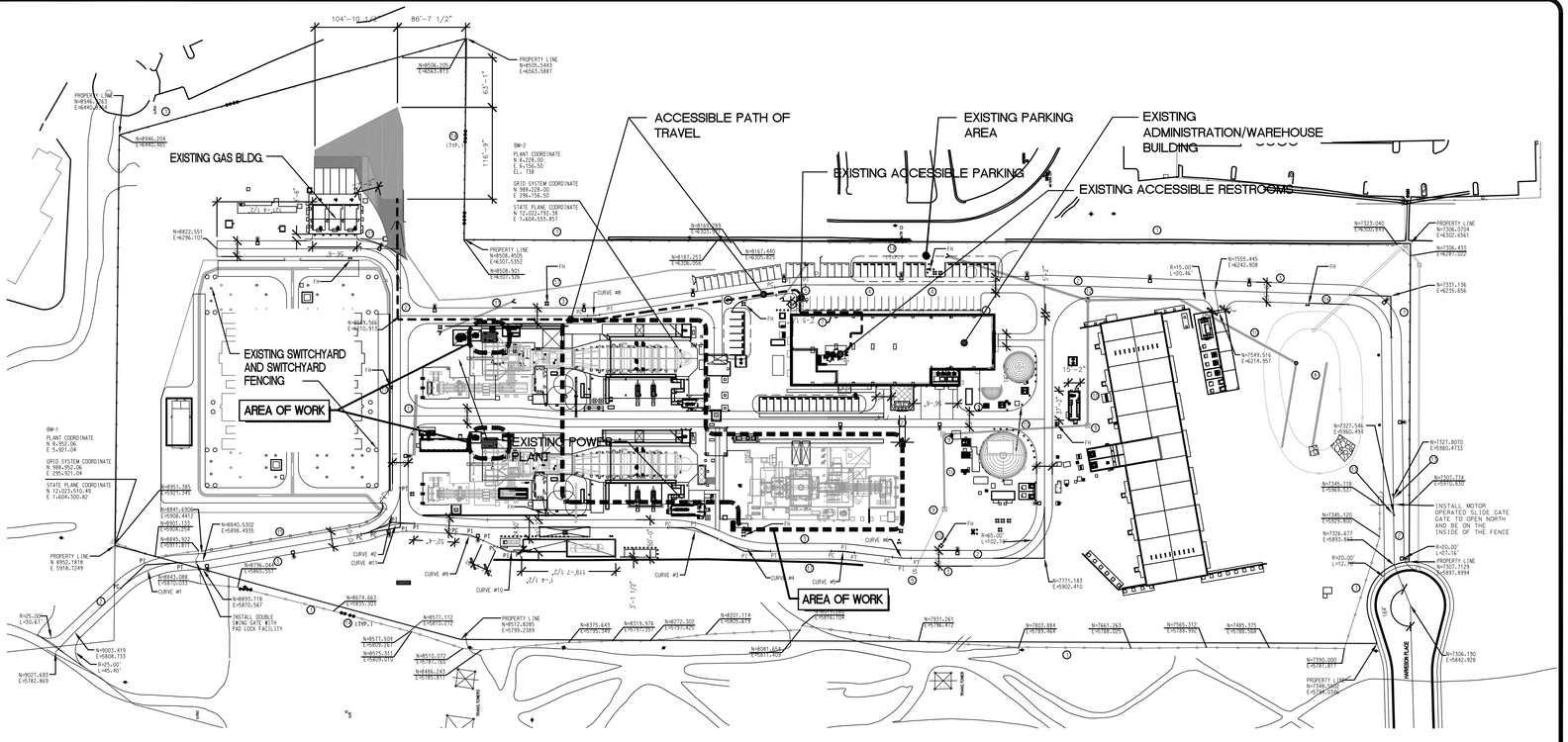

SITE PLAN
SCALE: 1" = 40'–0"

SITE SUMMARY

SITE GROSS AREA: 20.44 ACRES

ZONING: S–P SPECIAL DISTRICTS – VINEYARD/TIER 1

MAX. BUILDING HEIGHT ALLOWED: –

PROPOSED BUILDING HEIGHT:

SETBACKS
FRONT: 10'–0"
SIDE: 10'–0"
REAR: 15'–0"

SCOPE: CONSTRUCT PLATFORM TO PROVIDE ACCESS FOR MAINTENANCE VARIOUS COMPONENTS AT HRSG AND STEAM TURBINE.

TYPE OF CONSTRUCTION: III–B

SPRINKLERS: NO

OCCUPANCY: F–1

OCCUPANCY LOAD: 2

NOT FOR CONSTRUCTION
THESE DRAWINGS HAVE BEEN PRINTED PRIOR TO ISSUANCE OF A BUILDING PERMIT AND ARE SUBJECT TO CHANGE.

REV	DATE	DESCRIPTION	BY
0	1/29/2025	ISSUED FOR CLIENT REVIEW	JAS

MARTIN & LIBBY
STRUCTURAL ENGINEERS
4452 Glacier Avenue
San Diego, CA 92120
Ph (619) 280–9307
F (619) 284–3533
Job No 7584

TITLE SHEET
STEAM VALVE ACCESS PLATFORMS
PALOMAR ENERGY CENTER
ESCONDIDO, CA

SCALE: AS NOTED
DRAWN: RBH
DESIGNED: JAS
CHECKED: DRL
JOB NO: 7584
DATE: 1/24/25
SHEET NUMBER: T–1

1/29/25 * 3:43 pm * 7584 PALOMAR.dwg

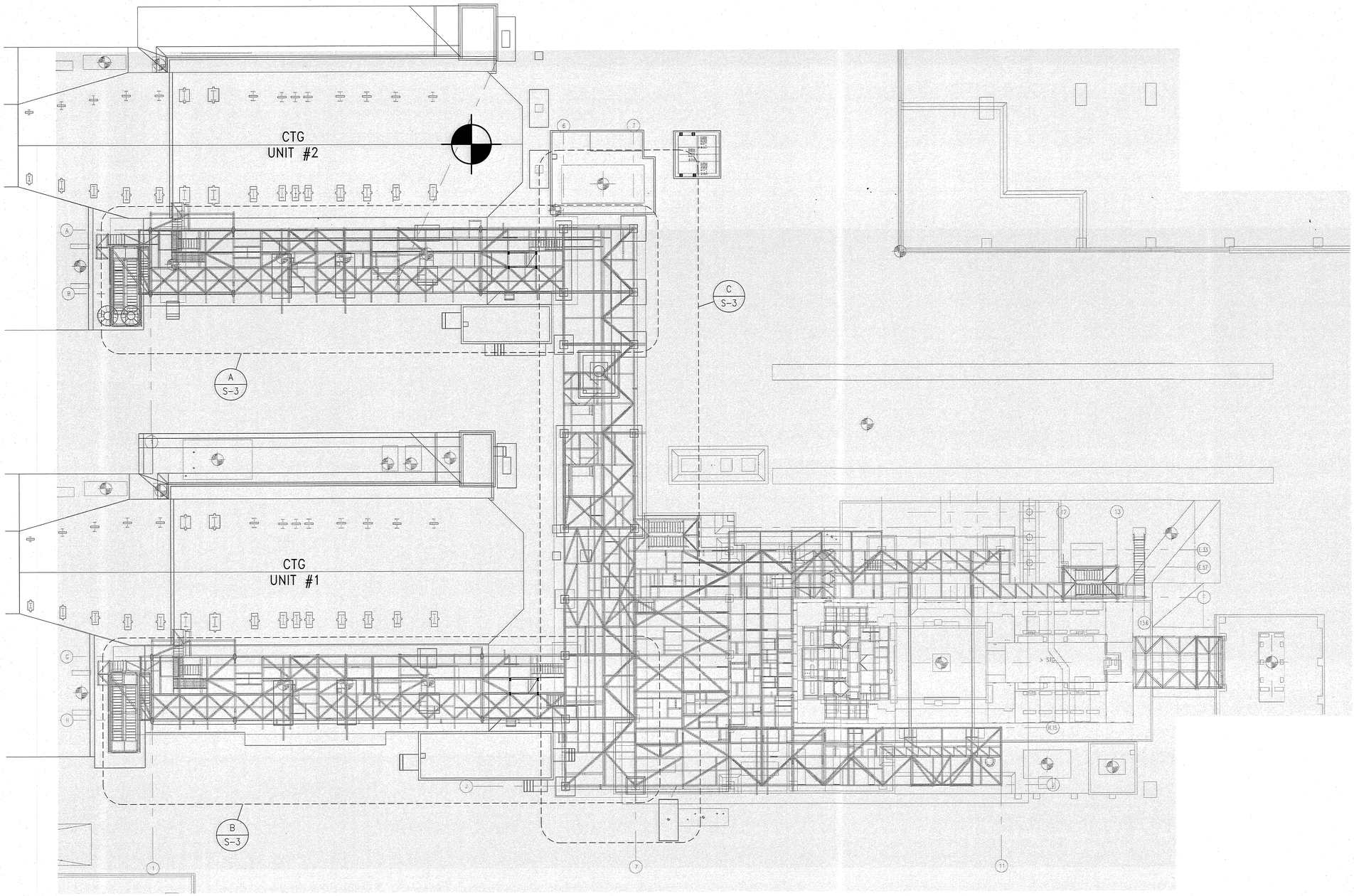

LOCATION PLAN

SCALE: 1/16" = 1'-0"

BIBB REFERENCE DWG 2004-005-ST-000A (REV 3)

N

NOT FOR CONSTRUCTION
THESE DRAWINGS HAVE BEEN PRINTED PRIOR TO ISSUANCE OF A BUILDING PERMIT AND ARE SUBJECT TO CHANGE.

REV	DATE	DESCRIPTION	BY
0	1/29/2025	ISSUED FOR CLIENT REVIEW	JAS

MARTIN & LIBBY
STRUCTURAL ENGINEERS
4452 Glacier Avenue
San Diego, CA 92120
Ph (619) 280-9307
F (619) 284-3533
Job No 7584

(N) PLATFORM LOCATION PLAN

STEAM VALVE ACCESS PLATFORMS

PALOMAR ENERGY CENTER
ESCONDIDO, CA

SCALE	AS NOTED
DRAWN	RBH
DESIGNED	JAS
CHECKED	DRL
JOB NO	7584
DATE	1/24/25
SHEET NUMBER	T-2

1/29/25 * 3:47 pm * 7584 PALOMAR.dwg

GENERAL

1. THE CONTRACTOR SHALL VERIFY ALL DIMENSIONS, ELEVATIONS AND CONDITIONS AT THE JOB SITE BEFORE STARTING WORK, AND SHALL NOTIFY THE STRUCTURAL ENGINEER IMMEDIATELY OF ANY DISCREPANCIES.

2. NOTES AND DETAILS ON THE DRAWINGS SHALL TAKE PRECEDENCE OVER THESE STANDARD NOTES AND TYPICAL DETAILS IN CASE OF CONFLICT.

3. DIMENSIONS SHALL TAKE PRECEDENCE OVER SCALED DRAWINGS.

4. ALL MATERIALS AND WORKMANSHIP SHALL BE PERFORMED IN ACCORDANCE WITH LOCAL STANDARDS AND THE APPLICABLE PROVISIONS OF THE 2010 CALIFORNIA BUILDING CODE (CBC) AS AMMENDED BY THE CITY OF ESCONDIDO.

5. WHERE NO CONSTRUCTION DETAILS ARE SHOWN OR NOTED FOR ANY PART OF THE WORK, SUCH DETAILS SHALL BE THE SAME AS FOR SIMILAR WORK SHOWN ON THE DRAWINGS. MEMBER SIZES ARE GENERALLY FOUND ON PLANS. DETAILS AND SECTIONS GENERALLY REFER TO GENERIC ELEMENTS.

6. THE CONTRACT STRUCTURAL DRAWINGS AND SPECIFICATIONS REPRESENT THE FINISHED STRUCTURE, UNLESS OTHERWISE INDICATED. THEY DO NOT INDICATE THE METHOD OF CONSTRUCTION. THE CONTRACTOR SHALL PROVIDE ALL MEASURES NECESSARY TO PROTECT THE STRUCTURE, WORKMEN, AND OTHER PERSONS DURING CONSTRUCTION. SUCH MEASURES SHALL INCLUDE, BUT NOT BE LIMITED TO, BRACING, SHORING FOR CONSTRUCTION EQUIPMENT, SHORING FOR THE BUILDING, SHORING FOR EARTH BANKS, FORMS, SCAFFOLDING, PLANKING, SAFETY NETS, SUPPORT AND BRACING FOR CRANES AND GIN POLES, ETC. THE CONTRACTOR SHALL SUPERVISE AND DIRECT THE WORK AND HE OR SHE SHALL BE SOLELY RESPONSIBLE FOR ALL CONSTRUCTION MEANS, METHODS, TECHNIQUES, SEQUENCES AND PROCEDURES. OBSERVATION VISITS TO THE SITE BY THE ENGINEER SHALL NOT CONSTITUTE INSPECTION OF THE ABOVE ITEMS.

7. NOTIFY THE STRUCTURAL ENGINEER WHEN DRAWINGS BY OTHERS SHOW OPENINGS, POCKETS, ETC., NOT SHOWN ON THE STRUCTURAL DRAWINGS, BUT WHICH ARE LOCATED IN THE STRUCTURAL MEMBERS.

8. ALL SPECIFICATION AND CODES NOTED SHALL BE THE LATEST APPROVED EDITIONS AND REVISIONS BY THE GOVERNMENTAL AGENCY HAVING JURISDICTION OVER THIS PROJECT.

9. CONSTRUCTION MATERIALS SHALL BE SPREAD OUT WHEN PLACED ON FRAMED FLOORS OR ROOFS. THE CONSTRUCTION MATERIAL LOAD SHALL NOT EXCEED THE DESIGN LIVE LOAD PER SQUARE FOOT. PROVIDE ADEQUATE SHORING AND/OR BRACING WHERE STRUCTURE HAS NOT ATTAINED DESIGN STRENGTH.

PAINTING

1. ANY EXISTING PAINTED SURFACES DAMAGED DURING CONSTRUCTION SHALL BE REPAIRED FOLLOWING 'SPECIFICATIONS FOR GENERAL PAINTING BIBB SPEC 980.'

   COLOR: SHERWIN WILLIAMS SW1022, CUBIST GRAY (OR EQUAL).

DESIGN CRITERIA

1. LIVE LOADS:

   PLATFORMS & STAIRS 100 PSF

2. EARTHQUAKE DESIGN DATA:

SEISMIC PARAMETER	RECOMMENDED VALUE	ASCE 7–05
SEISMIC IMPORTANCE FACTOR	1.25	SEC 11.5.1
S_S	1.060	SEC 11.4.1
S_1	0.396	SEC 11.4.1
SITE CLASS	D	TABLE 20.3–1
S_{DS}	0.76	SEC 11.4.4
S_{D1}	0.425	SEC 11.4.4
SEISMIC DESIGN CATEGORY	D	TABLE 11.6–1
COMPONENT RESPONSE MODIFICATION FACTOR Rp, O.M.F.	3.5	TABLE 15.4–1
COMPONENT RESPONSE MODIFICATION FACTOR Rp, B.F.	3.25	
SEISMIC DESIGN FORCE Fp, O.M.F.	0.271W	SEC 12.8
B.F.	0.292W	

LATITUDE: 33.1174207
LONGITUDE: –117.1194284

SUMMARY OF SPECIAL INSPECTION

1	CONCRETE	13.1	VERIFY SOIL CONDITIONS ARE SUBSTANTIALLY IN CONFORMANCE WITH THE SOIL INVESTIGATION REPORT.
2	BOLTS INSTALLED IN CONCRETE	13.2	VERIFY THAT FOUNDATION EXCAVATIONS EXTEND TO PROPER DEPTH AND BEARING STRATA.
3	CONCRETE MOMENT–RESISTING SPACE FRAME	13.3	PROVIDE SOIL COMPACTION TEST RESULTS, DEPTHS OF FILL, RELATIVE DENSITY, BEARING VALUES.
4	REINFORCING STEEL AND PRESTRESSING STEEL	13.4	PROVIDE SOIL EXPANSION TEST RESULTS, EXPANSION INDEX, RECOMMENDATIONS FOR FOUNDATIONS, ON–GRADE FLOOR SLAB DESIGN FOR EACH BUILDING SITE.
5	ALL STRUCTURAL WELDING	14	SMOKE CONTROL SYSTEM.
5.1	WELDING REINFORCING STEEL	15	SPECIAL CASES (DESCRIBE).
5.2	WELD TESTING DUCTILE MOMENT–RESISTING STEEL FRAME	16	OFF–SITE FABRICATION OF BUILDING COMPONENTS.
5.3	WELDING REINFORCING STEEL	17	OTHER SPECIAL INSPECTIONS AS REQUIRED BY DESIGNER.
6	HIGH–STRENGTH BOLTING		
7	STRUCTURAL MASONRY		
8	REINFORCED GYPSUM CONCRETE		
9	INSULATING CONCRETE FILL		
10	SPRAY–APPLIED FIREPROOFING		
11	DEEP FOUNDATIONS (PILING, DRILLED & CAISSONS)		
12	SHOTCRETE		

NO	DESCRIPTION OF TYPE OF INSPECTION REQUIRED, LOCATION, REMARKS, ETC	DESIGN STRENGTH
1	POST INSTALLED ANCHOR	SEE "EXPANSION ANCHORS" NOTES
5	ALL STRUCTURAL STEEL WELDING	E70XX
6	HIGH STRENGTH BOLTING	A325N
16	ALL STRUCTURAL STEEL SHOP WELDING (UNLESS DONE IN AN APPROVED FABRICATORS SHOP PER 1701.7, CBC)	E70XX

A. SPECIAL INSPECTION SHALL BE IN ACCORDANCE WITH FOLLOWING:

   1. STRUCTURAL STEEL AND HIGH STRENGTH BOLTING PER SECTION 1704.3 AND PER TABLE 1704.3.

   2. POST–INSTALLED ANCHORS: SPECIAL INSPECTION IS REQUIRED IN ACCORDANCE WITH SECTION 1704.13 OF THE 2007 CBC. INSTALLATION SHALL FOLLOW PROCEDURE GIVEN IN PRODUCT'S APPROVED EVALUATION/TEST REPORT.

B. THE SPECIAL INSPECTIONS LISTED ARE IN ADDITION TO THE CALLED INSPECTIONS REQUIRED BY SECTION 109 OF THE CBC, AS AMENDED.

C. CONTINUOUS INSPECTION IS ALWAYS REQUIRED DURING THE PERFORMANCE OF THE WORK UNLESS OTHERWISE SPECIFIED. WHEN WORK IN MORE THAN ONE CATEGORY OF WORK REQUIRING SPECIAL INSPECTION IS TO BE PERFORMED SIMULTANEOUSLY, OR THE GEOGRAPHIC LOCATION OF THE WORK IS SUCH THAT IT CANNOT BE CONTINUOUSLY OBSERVED IN ACCORDANCE WITH THE PROVISIONS OF CBC SECTION 1704, IT IS THE OWNER OR OWNER'S AGENT'S RESPONSIBILITY TO EMPLOY A SUFFICIENT NUMBER OF INSPECTORS TO ASSURE THAT ALL THE WORK IS INSPECTED IN ACCORDANCE WITH THOSE PROVISIONS.

D. THE SPECIAL INSPECTORS MUST BE CERTIFIED BY THE CITY OF ESCONDIDO TO PERFORM THE TYPE OF INSPECTION SPECIFIED.

E. IT IS THE RESPONSIBILITY OF THE CONTRACTOR TO NOTIFY THE SPECIAL INSPECTOR OR INSPECTION AGENCY AT LEAST ONE WORKING DAY PRIOR TO PERFORMING ANY WORK THAT REQUIRES SPECIAL INSPECTION.

F. SPECIALLY INSPECTED WORK THAT IS INSTALLED OR COVERED WITHOUT THE APPROVAL OF THE SPECIAL INSPECTOR IS SUBJECT TO REMOVAL OR EXPOSURE.

G. THE SPECIAL INSPECTOR SHALL SUBMIT IN WRITING A REPORT OF OBSERVATIONS AND TESTING FOR EACH INSPECTION TO THE S.E.O.R.

H. A CERTIFICATE OF SATISFACTORY COMPLETION OF WORK REQUIRING SPECIAL INSPECTION MUST BE COMPLETED AND SUBMITTED TO THE S.E.O.R.

I. AN APPLICATION FOR OFF–SITE FABRICATION MUST BE SUBMITTED TO THE S.E.O.R. FOR APPROVAL PRIOR TO FABRICATION.

SUMMARY OF SPECIAL INSPECTION (CONT.)

TABLE 1704.3
REQUIRED VERIFICATION AND INSPECTION OF STEEL CONSTRUCTION

VERIFICATION AND INSPECTION	CONTIN–UOUS	PERI–ODIC	REFERENCED STANDARD*	IBC REFERENCE
1. MATERIAL VERIFICATION OF HIGH–STRENGTH BOLTS, NUTS AND WASHERS:				
a. IDENTIFICATION MARKINGS TO CONFORM TO ASTM STANDARDS SPECIFIED IN THE APPROVED CONSTRUCTION DOCUMENTS.	–	X	APPLICABLE ASTM MATERIAL SPECIFI–CATIONS; AISC 360, SECTION A3.3	–
b. MANUFACTURER'S CERTIFICATE OF COMPLIANCE REQUIRED.	–	X	–	–
2. INSPECTION OF HIGH–STRENGTH BOLTING:				
a. BEARING–TYPE CONNECTIONS.	–	X	AISC 360, SECTION M2.5	1704.3.3
3. MATERIAL VERIFICATION OF STRUCTURAL STEEL:				
a. IDENTIFICATION MARKINGS TO CONFORM TO ASTM STANDARDS SPECIFIED IN THE APPROVED CONSTRUCTION DOCUMENTS.	–	–	ASTM A 6 OR ASTM A 568	1708.4
b. MANUFACTURERS' CERTIFIED MILL TEST REPORTS.	–	–	ASTM A 6 OR ASTM A 568	
4. MATERIAL VERIFICATION OF WELD FILLER MATERIALS:				
a. IDENTIFICATION MARKINGS TO CONFORM TO AWS SPECIFICATION IN THE APPROVED CONSTRUCTION DOCUMENTS.	–	–	AISC 360, SECTION A3.5	–
b. MANUFACTURER'S CERTIFICATE OF COMPLIANCE REQUIRED.	–	–	–	–
5. INSPECTION OF WELDING:				
a. STRUCTURAL STEEL:				
1) COMPLETE AND PARTIAL PENETRATION GROOVE WELDS.	X	–	AWS D1.1	1704.3.1
2) MULTIPASS FILLET WELDS.	X	–		
3) SINGLE–PASS FILLET WELDS > 5/16".	X	–		
4) SINGLE–PASS FILLET WELDS ≤ 5/16".	–	X		
5) FLOOR AND ROOF DECK WELDS.	–	X	AWS D1.3	–
6. INSPECTION OF STEEL FRAME JOINT DETAILS FOR COMPLIANCE WITH APPROVED CONSTRUCTION DOCUMENTS:		X	–	1704.3.2
a. DETAILS SUCH AS BRACING AND STIFFENING.	–	–		
b. MEMBER LOCATIONS.	–	–		
c. APPLICATION OF JOINT DETAILS AT EACH CONNECTION.	–			

FOR SI: 1 INCH = 25.4 mm.
a. WHERE APPLICABLE, SEE ALSO SECTION 1707.1, SPECIAL INSPECTION FOR SEISMIC RESISTANCE.

STRUCTURAL STEEL

1. ALL STRUCTURAL STEEL SHALL CONFORM TO THE FOLLOWING AND SHALL BE FABRICATED ACCORDING TO AISC PRACTICE AND SPECIFICATIONS FOR BUILDINGS (UNLESS OTHERWISE SPECIFIED).

   A. MATERIAL OF STRUCTURAL ELEMENTS

      - STEEL BEAMS – ASTM A992, GRADE 50, Fy = 50 KSI
      - STRUCTURAL HOLLOW TUBES – ASTM A500, GRADE B, Fy = 46 KSI
      - CHANNELS, PLATES, ANGLES – ASTM A36, Fy = 36 KSI
      - STEEL PIPE – ASTM 53, GRADE B, Fy = 35 KSI

2. BOLTS SHALL CONFORM TO ASTM A325 OR F1852, UNO. ALL BOLTS SHALL BE INSTALLED WITH CUT STEEL WASHERS. BOLT HOLES SHALL BE 1/16–INCH LARGER THAN THE NOMINAL SIZE OF THE BOLT. 4

3. ALL WELDING SHALL BE PERFORMED BY CERTIFIED OPERATORS UNDER THE SUPERVISION OF AN APPROVED FABRICATOR USING THE ELECTRIC SHIELDED ARC PROCESS AS FORMULATED BY THE AMERICAN WELDING SOCIETY.

4. STEEL SHALL BE IDENTIFIED BY HEAT OR MELT NUMBERS AND SHALL BE ACCOMPANIED BY TEST REPORTS.

STRUCTURAL STEEL (CONT)

5. AISC STANDARD BEAM CONNECTIONS SHALL BE USED FOR CONNECTIONS NOT SHOWN (AISC 9TH EDITION OR EQUAL) USING 5/8–INCH BOLTS.

6. ALL STEEL SHALL BE FABRICATED TO FIT TOGETHER PLUMB AND TRUE IN THE FIELD WITHOUT ALTERATION.

7. WELDING ELECTRODES FOR MANUAL SHIELDED METAL–ARC WELDING SHALL CONFORM TO SPECIFICATIONS FOR MILD STEEL COVERED ARC WELDING ELECTRODES, AWS A5.1, OR SPECIFICATION FOR LOW–ALLOY STEEL COVERED ARC– WELDING ELECTRODES AWS A5.5. ELECTRODES SHALL BE E70 SERIES.

8. ELECTRODES USED IN THE GAS METAL ARC PROCESS SHALL CONFORM TO SPECIFICATION FOR MILD STEEL ELECTRODES FOR GAS METAL–ARC WELDING AWS A5.18.

9. REFER TO SPECIAL INSPECTION NOTES FOR WELDING REQUIREMENTS.

10. ALL WELDS USED IN PRIMARY MEMBERS AND CONNECTIONS IN THE SEISMIC FORCE RESISTING SYSTEM SHALL BE MADE WITH A FILLER METAL THAT HAS A MINIMUM CHARPY V–NOTCH TOUGHNESS OF 20 FT–LBS AT MINUS 20° F, AS DETERMINED BY AWS CLASSIFICATION OR MANUFACTURER CERTIFICATION.

11. AN ERECTION PLAN PREPARED BY A REGISTERED CIVIL OR STRUCTURAL ENGINEER SHALL BE SUBMITTED TO THE S.E.O.R. WHICH SHALL INCORPORATE ALL LOCAL, STATE AND FEDERAL SAFETY REQUIREMENTS. THIS PLAN IS SUBMITTED TO VERIFY ITS EXISTENCE NOT FOR A SAFETY REVIEW, ALL RESPONSIBILITY FOR SAFETY REMAINS WITH THE CONTRACTOR.

12. EXCEPT AS SUBSEQUENTLY NOTED, ALL HIGH STRENGTH BOLTS SHALL BE PRETENSIONED, AS DEFINED IN SECTION 4.2 OF THE RESEARCH COUNCIL ON STRUCTURAL CONNECTIONS (RCSC) SPECIFICATION. 4

EXPANSION ANCHORS

1. ALL ANCHORS SHALL BE ICC APPROVED.

2. ALL ANCHORS SHALL BE INSTALLED IN STRICT ACCORDANCE WITH MANUFACTURER'S APPROVED RESEARCH REPORT(ICC–ESR).

3. ANCHORS SHALL BE: HILTI KB–TZ . . . ESR–1917

4. CONCRETE IN WHICH ANCHORS ARE INSTALLED SHALL BE NORMAL WEIGHT WITH A MINIMUM 28 DAY COMPRESSIVE STRENGTH OF 3,000 P.S.I.

5. ANCHOR DIAMETER REFERS TO THE THREAD SIZE FOR THE WEDGE CATEGORIES.

6. TEST EQUIPMENT (INCLUDING TORQUE WRENCHES) IS TO BE CALIBRATED BY AN APPROVED TESTING LABORATORY IN ACCORDANCE WITH STANDARD RECOGNIZED PROCEDURES.

7. TEST 50 PERCENT OR ALTERNATE BOLTS IN A GROUP FOR EACH PIECE OF EQUIPMENT.

8. THE FOLLOWING CRITERIA APPLY FOR THE ACCEPTANCE OF INSTALLED ANCHORS:

   TORQUE WRENCH METHOD: THE APPLICABLE TEST TORQUE MUST BE REACHED WITHIN THE FOLLOWING LIMITS: WEDGE TYPE: ONE–HALF (1/2) TURN OF THE NUT.

TEST VALUES

NORMAL WEIGHT CONCRETE

ANCHOR DIA (IN)	WEDGE TORQUE (FT–LBS)
1/2	40
3/4	110

9. TESTING SHOULD OCCUR A MINIMUM OF 24 HOURS AFTER INSTALLATION OF THE SUBJECT ANCHORS.

10. IF THE MANUFACTURER'S RECOMMENDED INSTALLATION TORQUE IS LESS THAN THE TEST TORQUE NOTED IN THE TABLE, THE MANUFACTURER'S RECOMMENDED INSTALLATION TORQUE SHOULD BE USED IN LIEU OF THE TABULATED VALUES.

11. ALL TESTS SHALL BE PERFORMED IN THE PRESENCE OF THE SPECIAL INSPECTOR.

12. WHEN INSTALLING DRILLED–IN ANCHORS IN EXISTING NON–PRESTRESSED REINFORCED CONCRETE USE CARE AND CAUTION TO AVOID CUTTING OR DAMAGING THE EXISTING REINFORCING BARS.

13. UNLESS OTHERWISE SHOWN, PROVIDE A MINIMUM OF 6x DIAMETER EDGE DISTANCES AND 12xDIAMETER SPACING OF ANCHORS.

EXPANSION ANCHORS (CONT)

14. FOR EXTERIOR USE DRILLED IN ANCHORS SHALL BE STAINLESS STEEL.

MISCELLANEOUS METALS

1. MISCELLANEOUS METALS SHALL INCLUDE ITEMS MANUFACTURED AND SHOP FORMED OR FABRICATED ITEMS NOT SPECIFIED ELSEWHERE.

2. WELDING SHALL COMPLY WITH AWS PROCEDURES, AND WELDERS MUST BE CERTIFIED.

3. STEEL SHAPES, PLATES AND BARS – ASTM A36.

4. FURNISH ALL NECESSARY ANCHORAGE DEVICES, AND FASTENERS FOR COMPLETE INSTALLATION.

5. VERIFY FIELD CONDITIONS SO THAT ITEMS CAN BE INSTALLED WITHOUT CUTTING AND FITTING IN THE FIELD.

6. FIT EXPOSED CONNECTIONS ACCURATELY TO FORM TIGHT JOINTS.

7. TOUCH UP GALVANIZED SURFACES DAMAGED OR FIELD FITTED.

8. PLATFORM DECKING AND STAIRS:

   A. MANUFACTURED WELDED STEEL GRATING FASTENING TO SUPPORT STEEL
      1 1/4"x3/16" OR 2 1/4"x3/16" @ 1 3/16" O.C.
      (SERRATED GALVANIZED GRATING MATCH EXISTING)
   B. CLIPS TO SECURE GRATING SHALL BE SIMILAR TO 'GRATING FASTENER INC' MODEL GG GALVANIZED W/SADDLE CLIP TOPS TO MATCH EXISTING CONDITIONS.

9. LADDER:

   ALL FIXED LADDERS SHALL CONFORM TO OSHA REGULATIONS (STANDARDS –29 CFR) SECTION 1910.27.

   A. SHOP FABRICATED OF SHAPES, AS INDICATED.

10. RAILINGS:

   A. GALVANIZED 1 1/2" STD. PIPE CONSTRUCTION.
   B. WELD ALL INTERSECTIONS ALL AROUND.
   C. CLOSE ALL ENDS.
   D. GRIND SMOOTH SO THAT THERE ARE NO ROUGH EDGES.

GALVANIZATION

1. ALL STRUCTURAL STEEL & MISCELLANEOUS METALS INCLUDING PLATES SHALL BE HOT DIPPED GALVANIZED. ALL BOLTS, NUTS AND WASHER SHALL BE GALVANIZED. ALL STEEL GRATING, UNLESS OTHERWISE NOTED, SHALL BE GALVANIZED. GALVANIZING SHALL BE DONE IN CONFORMANCE WITH ASTM A123 GRADE 60 OR ASTM A153 CLASS C AS APPROPRIATE. ALL DAMAGED GALVANIZED SURFACES SHALL BE REPAIRED WITH GALVA–GUARD ZINC TOUCH–UP SOLDER BY COMINCO LTD OR SCE APPROVED EQUAL.

ABBREVIATIONS

&	AND	(N)	NEW
@	AT		
ADDL	ADDITIONAL	OPP	OPPOSITE
BM	BEAM	PL	PLATE
B.O.	BOTTOM OF		
BTM	BOTTOM	SCHED	SCHEDULE
		S.E.O.R.	STRUCTURAL ENGINEER OF RECORD
CL	CENTERLINE		
CONN	CONNECTION	SIM	SIMILAR
		S.O.G.	SLAB ON GRADE
DIA (ø)	DIAMETER	STD	STANDARD
		STIFF	STIFFEN(ER)
(E)	EXISTING		
EL	ELEVATION	T.O.C.	TOP OF CONCRETE
EMBED	EMBED(ED)	T.O.G.	TOP OF GRATE
		T.O. PL	TOP OF PLATE
FLNG	FLANGE	T.O.S.	TOP OF STEEL
F.V.	FIELD VERIFY	TYP	TYPICAL
GALV	GALVANIZED	U.O.N.	UNLESS OTHERWISE NOTED
HRSG	HET RECOVERY STEAM GENERATOR	W/	WITH
		W.F.	WIDE FLANGE
		W.P.	WORK POINT
INFO	INFORMATION		
MAX	MAXIMUM		
MIN	MINIMUM		

NOT FOR CONSTRUCTION
THESE DRAWINGS HAVE BEEN PRINTED PRIOR TO ISSUANCE OF A BUILDING PERMIT AND ARE SUBJECT TO CHANGE.

REV	DATE	DESCRIPTION	BY
0	1/29/2025	ISSUED FOR CLIENT REVIEW	JAS

MARTIN & LIBBY
STRUCTURAL ENGINEERS
4452 Glacier Avenue
San Diego, CA 92120
Ph (619) 280–9307
F (619) 284–3533
Job No 7584

GENERAL NOTES

STEAM VALVE ACCESS PLATFORMS
PALOMAR ENERGY CENTER
ESCONDIDO, CA

SCALE AS NOTED
DRAWN RBH
DESIGNED JAS
CHECKED DRL
JOB NO 7584
DATE 1/24/25
SHEET NUMBER S–1

1/29/25 * 3:49 pm * 7584 PALOMAR.dwg

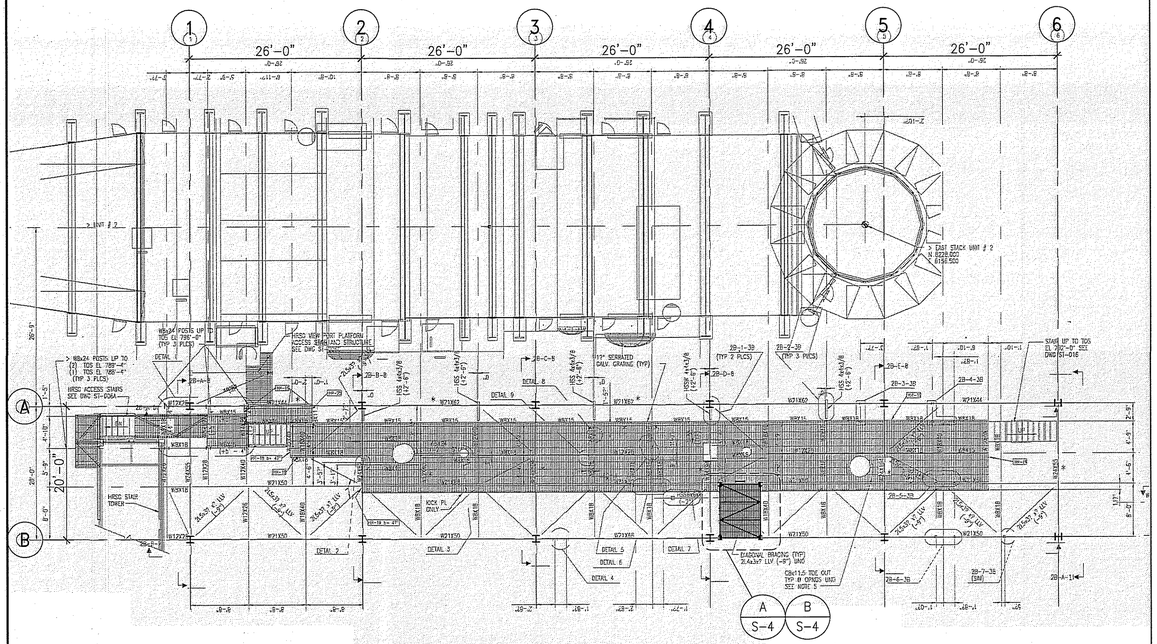

BIBB REFERENCE DWG 2004-005-ST-002B (REV 4)

(N) PLATFORM LOCATION PLAN
AT PIPE RACK FRAMING
(E) T.O.S. EL 784'-0"
SCALE: 3/32" = 1'-0"

A

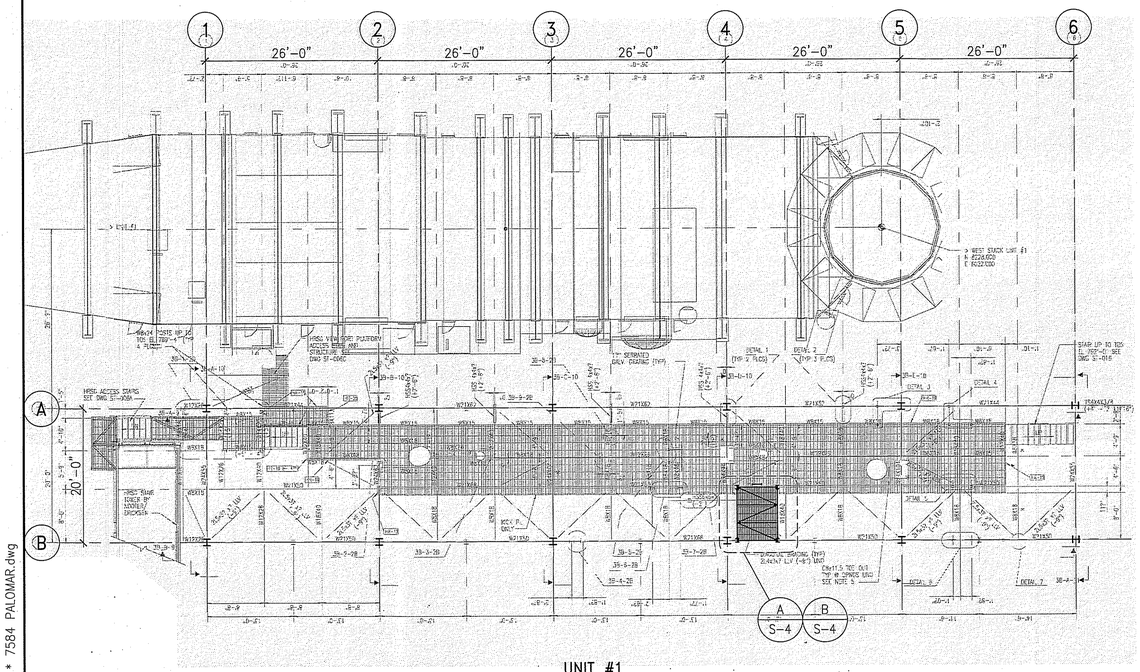

BIBB REFERENCE DWG 2004-005-ST-003B (REV 4)

(N) PLATFORM LOCATION PLAN
AT PIPE RACK FRAMING
(E) T.O.S. EL 784'-0"
SCALE: 3/32" = 1'-0"

B

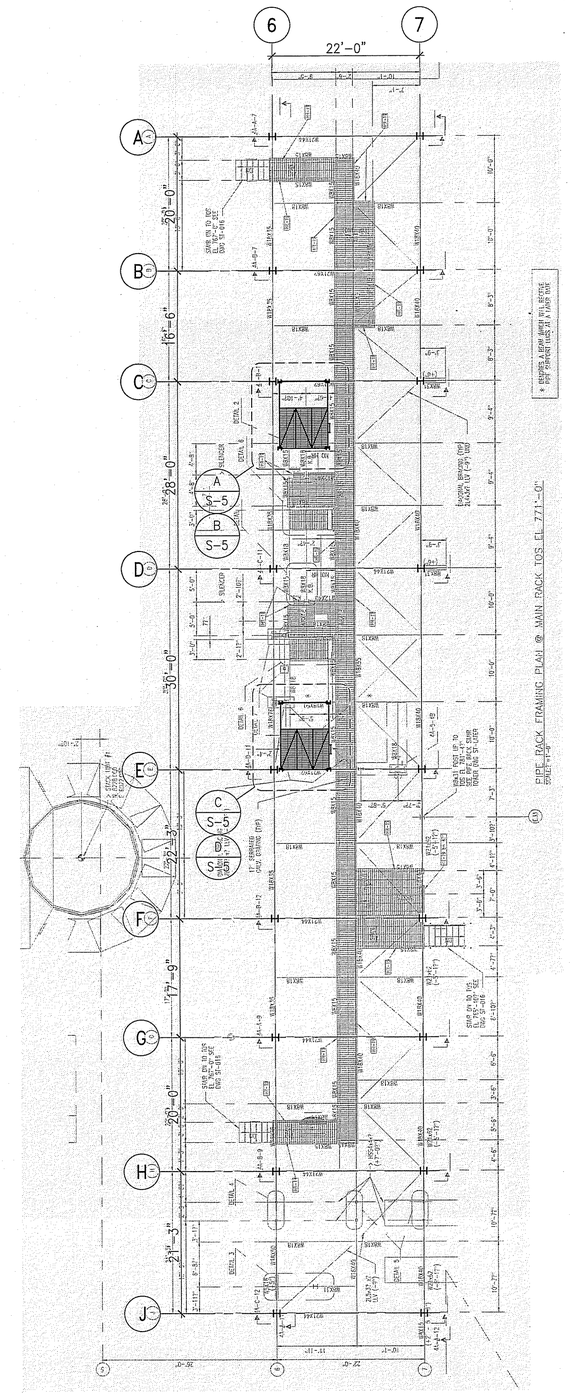

BIBB REFERENCE DWG 2004-004A (REV 5)

(N) PLATFORM LOCATION PLAN
AT PIPE RACK FRAMING
(E) T.O.S. EL 784'-0"
SCALE: 3/32" = 1'-0"

C

NOT FOR CONSTRUCTION
THESE DRAWINGS HAVE BEEN PRINTED PRIOR TO ISSUANCE OF A BUILDING PERMIT AND ARE SUBJECT TO CHANGE.

REV	DATE	DESCRIPTION	BY
0	1/29/2025	ISSUED FOR CLIENT REVIEW	JAS

MARTIN & LIBBY
STRUCTURAL ENGINEERS
4452 Glacier Avenue
San Diego, CA 92120
Ph (619) 280-9307
F (619) 284-3533
Job No 7584

PIPE RACK PLATFORM LOCATON PLAN

STEAM VALVE ACCESS PLATFORMS

PALOMAR ENERGY CENTER
ESCONDIDO, CA

SCALE	AS NOTED
DRAWN	RBH
DESIGNED	JAS
CHECKED	DRL
JOB NO	7584
DATE	1/24/25
SHEET NUMBER	S-3

1/29/25 * 4:00 pm * 7584 PALOMAR.dwg

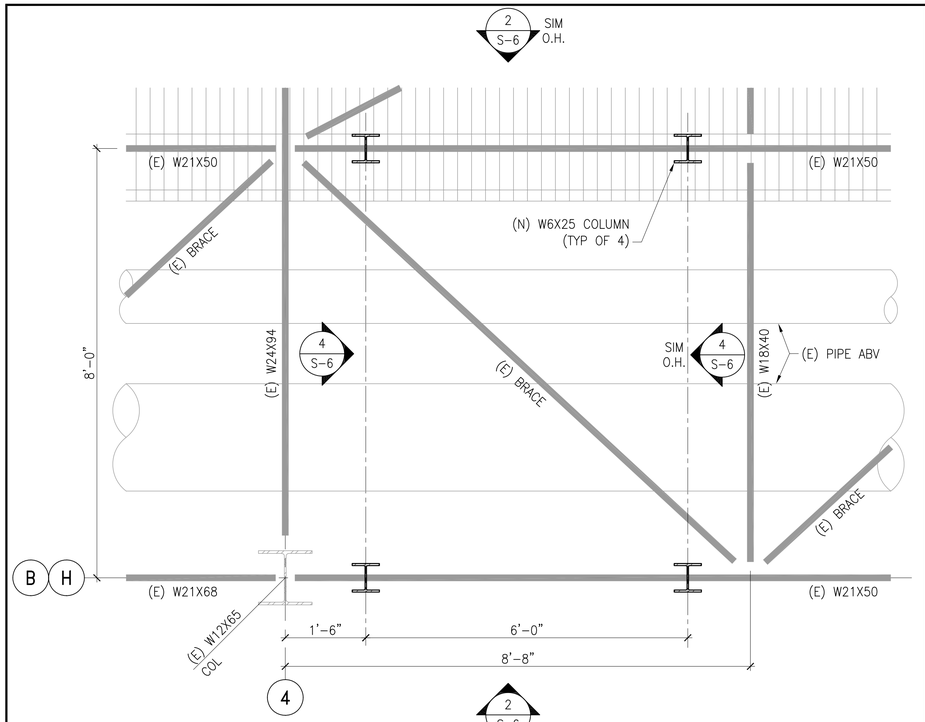

2
S-6

(N) PLATFORM COLUMN PLAN
AT GRIDS 4 & B AND 4 & H
(E) T.O.S. EL 784'-0"
SCALE: 3/4" = 1'-0"
A

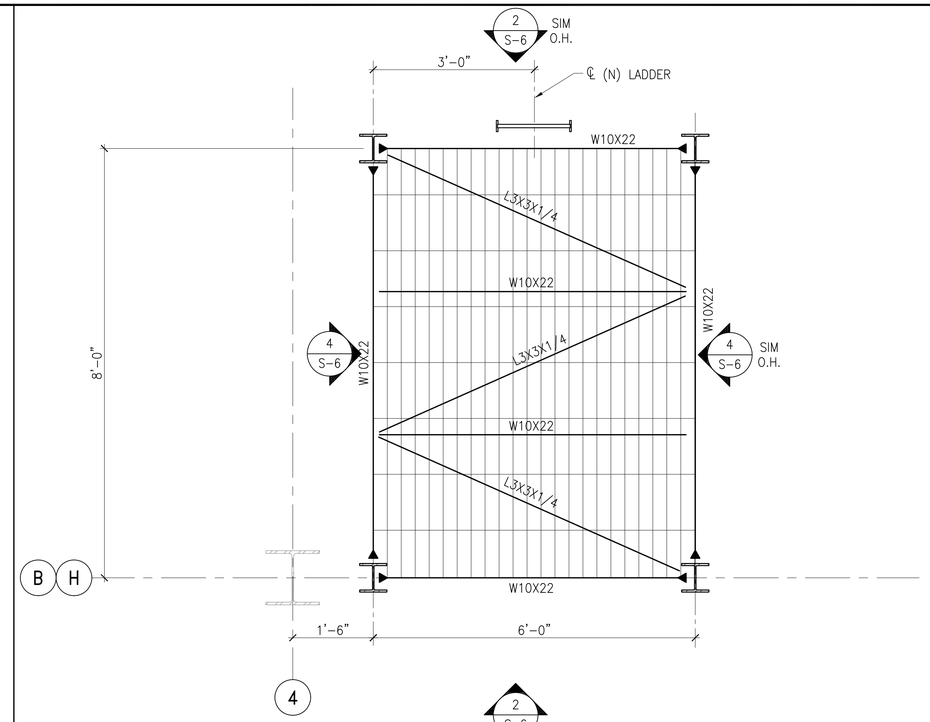

2
S-6

(N) PLATFORM FRAMING PLAN
AT GRIDS 4 & B AND 4 & H
(E) T.O.S. EL 789'-0"
SCALE: 3/4" = 1'-0"
B

NOT FOR CONSTRUCTION
THESE DRAWINGS HAVE BEEN PRINTED PRIOR TO ISSUANCE OF A BUILDING PERMIT AND ARE SUBJECT TO CHANGE.

REV	DATE	DESCRIPTION	BY
0	1/29/2025	ISSUED FOR CLIENT REVIEW	JAS

MARTIN & LIBBY
STRUCTURAL ENGINEERS
4452 Glacier Avenue
San Diego, CA 92120
Ph (619) 280-9307
F (619) 284-3533
Job No 7584

PLANS

STEAM VALVE ACCESS PLATFORMS

PALOMAR ENERGY CENTER
ESCONDIDO, CA

SCALE AS NOTED
DRAWN RBH
DESIGNED JAS
CHECKED DRL
JOB NO 7584
DATE 1/24/25

SHEET NUMBER
S-4

1/29/25 * 3:52 pm * 7584 PALOMAR.dwg

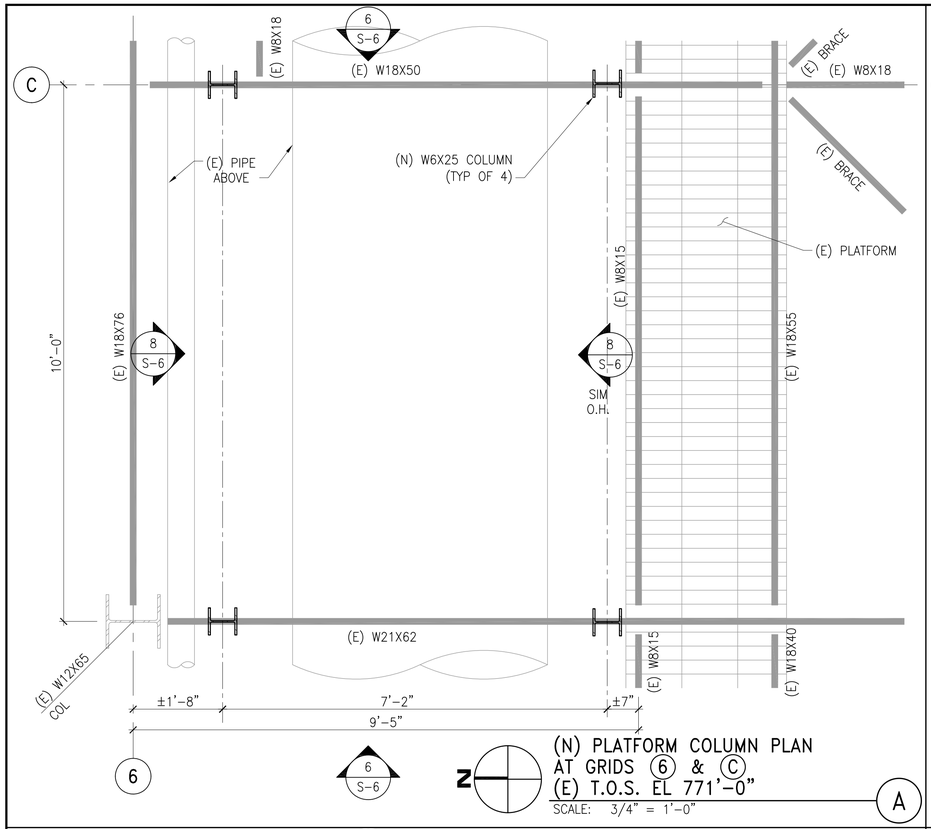

(N) PLATFORM COLUMN PLAN
AT GRIDS 6 & C
(E) T.O.S. EL 771'-0"
SCALE: 3/4" = 1'-0"

A

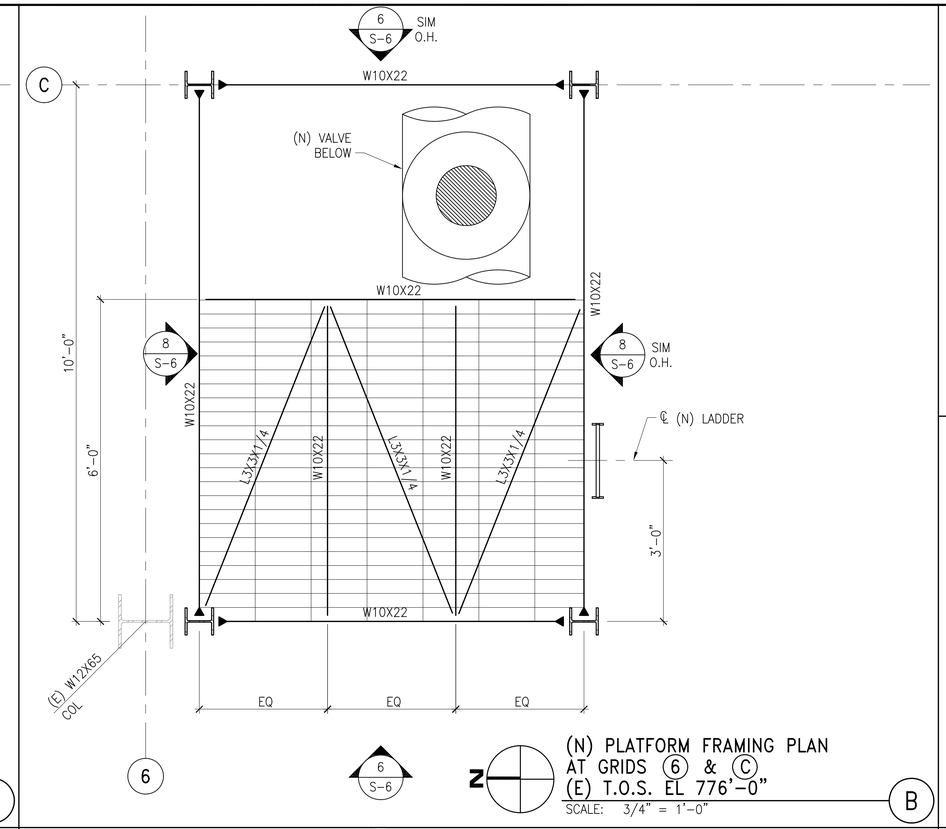

(N) PLATFORM FRAMING PLAN
AT GRIDS 6 & C
(E) T.O.S. EL 776'-0"
SCALE: 3/4" = 1'-0"

B

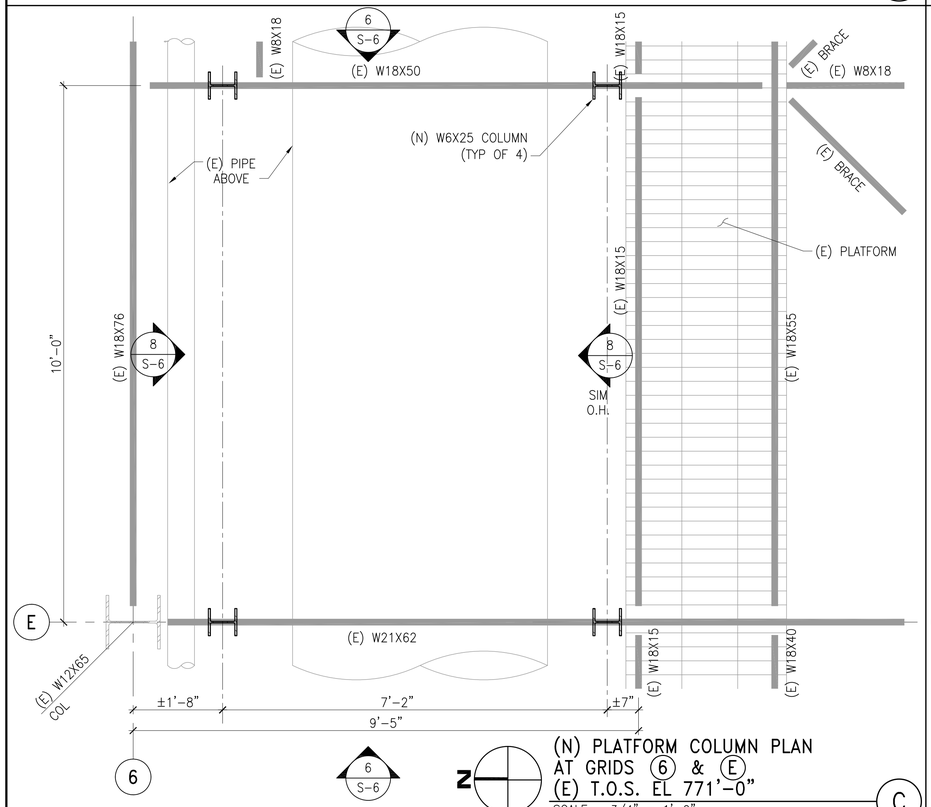

(N) PLATFORM COLUMN PLAN
AT GRIDS 6 & E
(E) T.O.S. EL 771'-0"
SCALE: 3/4" = 1'-0"

C

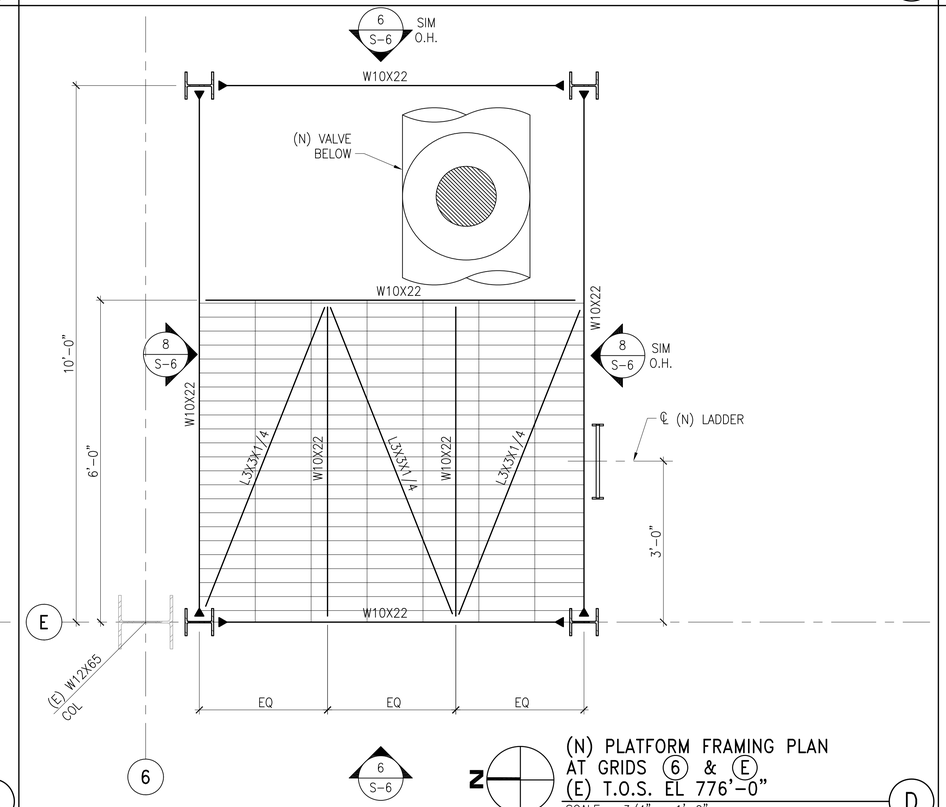

(N) PLATFORM FRAMING PLAN
AT GRIDS 6 & E
(E) T.O.S. EL 776'-0"
SCALE: 3/4" = 1'-0"

D

NOT FOR CONSTRUCTION
THESE DRAWINGS HAVE BEEN PRINTED PRIOR TO ISSUANCE OF A BUILDING PERMIT AND ARE SUBJECT TO CHANGE.

PLAN/ELEVATION NOTES:

1. CONTRACTOR SHALL FIELD VERIFY ALL DIMENSIONS AND NOTIFY ENGINEER OF ANY DISCREPANCIES BETWEEN PLANS AND FIELD CONDITIONS.
2. DIMENSIONS SHOWN WITH RESPECT TO CENTERLINE OF STEEL MEMBERS, U.O.N.
3. GUARDRAIL LOCATION SHOWN IN PLAN IS APPROXIMATE. GUARDRAIL IS REQ FOR FALL PROTECTION AT ALL OPEN EDGES AT PLATFORMS. SEE SHEET S-15 FOR GUARD INFO.
4. LOCATION OF LADDER SHOWN IN PLAN IS APPROX. EXACT LOCATION SHALL BE FIELD DETERMINED. SEE SHEET S-15 FOR ADDL LADDER INFORMATION.
5. ALL PIPES/UTILITIES NOT SHOWN FOR CLARITY.
6. T.O.S. OF (E) FRAMING SHOWN FOR REFERENCE ONLY.
7. SEE 6/S-2 FOR COLUMN BASE CONNECTION.

PLAN LEGEND

INDICATES DIRECTION OF (N) GRATING SPAN

INDICATES LIMITS OF (N) GRATING

REV	DATE	DESCRIPTION	BY
0	1/29/2025	ISSUED FOR CLIENT REVIEW	JAS

MARTIN & LIBBY
STRUCTURAL ENGINEERS
4452 Glacier Avenue
San Diego, CA 92120
Ph (619) 280-9307
F (619) 284-3533
Job No 7584

PLANS

STEAM VALVE ACCESS PLATFORMS

PALOMAR ENERGY CENTER
ESCONDIDO, CA

SCALE	AS NOTED
DRAWN	RBH
DESIGNED	JAS
CHECKED	DRL
JOB NO	7584
DATE	1/24/25

SHEET NUMBER

S-5

1/29/25 * 3:52 pm * 7584 PALOMAR.dwg

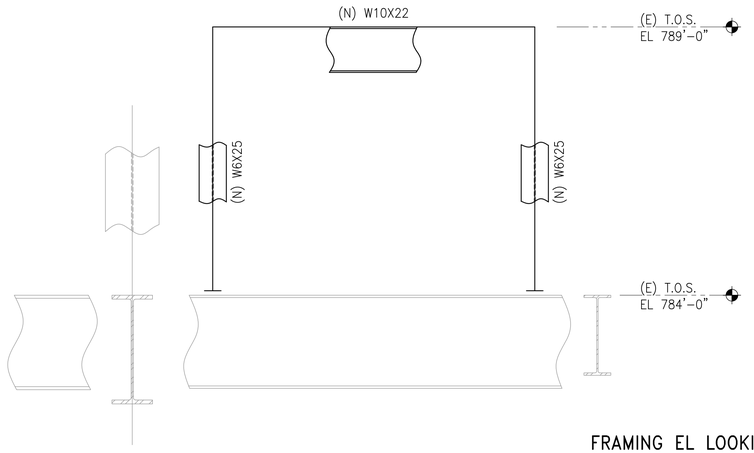

FRAMING EL LOOKING EAST
(WEST EL SIM) VALVE #?
SCALE: 3/4" = 1'-0"
2

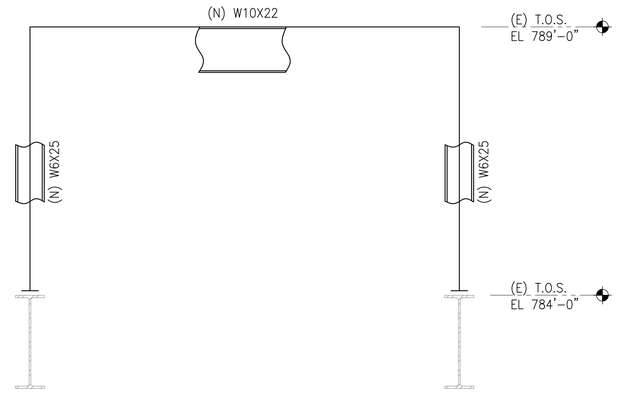

FRAMING EL LOOKING SOUTH
(NORTH EL SIM) VALVE #?
SCALE: 3/4" = 1'-0"
4

NOT FOR CONSTRUCTION
THESE DRAWINGS HAVE BEEN PRINTED PRIOR TO ISSUANCE OF A BUILDING PERMIT AND ARE SUBJECT TO CHANGE.

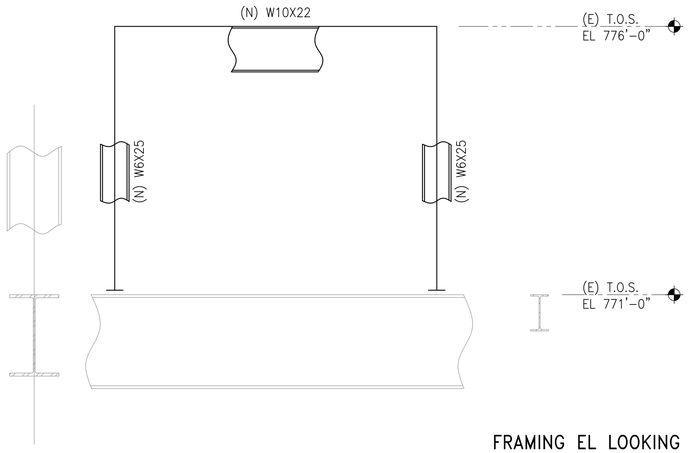

FRAMING EL LOOKING EAST
(WEST EL SIM) VALVE #?
SCALE: 3/4" = 1'-0"
6

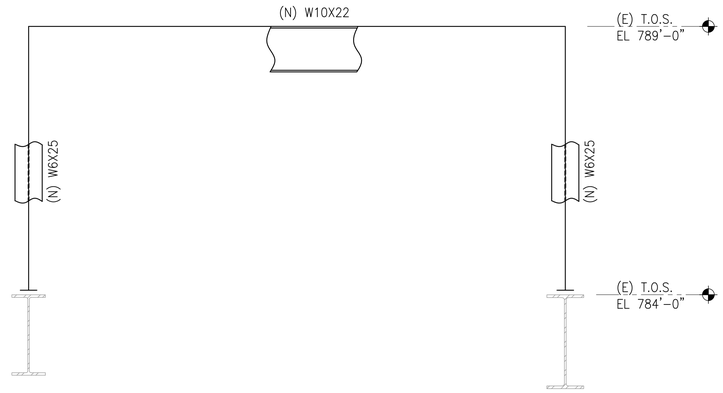

FRAMING EL LOOKING SOUTH
(NORTH EL SIM) VALVE #?
SCALE: 3/4" = 1'-0"
8

ELEVATION NOTES:

1. CONTRACTOR SHALL FIELD VERIFY ALL DIMENSIONS AND NOTIFY ENGINEER OF ANY DISCREPANCIES BETWEEN PLANS AND FIELD CONDITIONS.
2. DIMENSIONS SHOWN WITH RESPECT TO CENTERLINE OF STEEL MEMBERS, U.O.N.
3. ALL PIPES/UTILITIES NOT SHOWN FOR CLARITY.
4. GUARDRAILS AND LADDERS NOT SHOWN IN ELEVATIONS FOR CLARITY.
5. SEE ? / S-2 FOR COLUMN BASE CONNECTION.

REV	DATE	DESCRIPTION	BY
0	1/29/2025	ISSUED FOR CLIENT REVIEW	JAS

MARTIN & LIBBY
STRUCTURAL ENGINEERS
4452 Glacier Avenue
San Diego, CA 92120
Ph (619) 280-9307
F (619) 284-3533
Job No 7584

ELEVATIONS

STEAM VALVE ACCESS PLATFORMS
PALOMAR ENERGY CENTER
ESCONDIDO, CA

SCALE AS NOTED
DRAWN RBH
DESIGNED JAS
CHECKED DRL
JOB NO 7584
DATE 1/24/25

SHEET NUMBER
S-6

1/29/25 * 3:52 pm * 7584 PALOMAR.dwg